Accessory Dwelling Unit
Studio - 499s.f.
Perris, CA

SHEET INDEX

T1.1	TITLE SHEET
T1.2	EXTERIOR STYLE OPTIONS
AS.1	SITE INFORMATION
AS.2	EXAMPLE SITE PLAN
AS.3	PROPOSED SITE PLAN
G0.1	RESIDENTIAL MANDATORY FEATURES 2022 CALGREEN
G0.2	RESIDENTIAL MANDATORY FEATURES 2022 CALGREEN
G0.3	GENERAL NOTES
G0.4	GENERAL NOTES
A0.1	WINDOW & DOOR SCHEDULES
A1.1	FLOOR PLAN CRAFTSMAN
A1.1R	FLOOR PLAN CRAFTSMAN – REVERSE
A1.2	FLOOR PLAN SPANISH
A1.2R	FLOOR PLAN SPANISH – REVERSE
A1.3	FLOOR PLAN TRADITIONAL
A1.3R	FLOOR PLAN TRADITIONAL – REVERSE
A1.4	ROOF PLAN CRAFTSMAN
A1.4R	ROOF PLAN CRAFTSMAN – REVERSE
A1.5	ROOF PLAN SPANISH
A1.5R	ROOF PLAN SPANISH – REVERSE
A1.6	ROOF PLAN TRADITIONAL
A1.6R	ROOF PLAN TRADITIONAL – REVERSE
A2.1	ELECTRICAL PLAN
A2.1R	ELECTRICAL PLAN – REVERSE
A2.2	MECHANICAL/PLUMBING PLAN
A2.2R	MECHANICAL/PLUMBING PLAN – REVERSE
A3.1	EXTERIOR ELEVATIONS CRAFTSMAN
A3.1R	EXTERIOR ELEVATIONS CRAFTSMAN – REVERSE
A3.2	EXTERIOR ELEVATIONS SPANISH
A3.2R	EXTERIOR ELEVATIONS SPANISH – REVERSE
A3.3	EXTERIOR ELEVATIONS TRADITIONAL
A3.3R	EXTERIOR ELEVATIONS TRADITIONAL – REVERSE
A4.1	BUILDING SECTIONS CRAFTSMAN
A4.1R	BUILDING SECTIONS CRAFTSMAN – REVERSE
A4.2	BUILDING SECTIONS SPANISH
A4.2R	BUILDING SECTIONS SPANISH – REVERSE
A4.3	BUILDING SECTIONS TRADITIONAL
A4.3R	BUILDING SECTIONS TRADITIONAL – REVERSE
A5.1	ARCHITECTURAL DETAILS
A5.2	ARCHITECTURAL DETAILS
A5.3	ARCHITECTURAL DETAILS
S1	STRUCTURAL NOTES + SPECIFICATIONS
S2	CRAFTSMAN FOUNDATION & FRAMING PLAN
S2R	CRAFTSMAN FOUNDATION & FRAMING PLAN – REVERSE
S3	SPANISH FOUNDATION & FRAMING PLAN
S3R	SPANISH FOUNDATION & FRAMING PLAN – REVERSE
S4	TRADITIONAL FOUNDATION & FRAMING PLAN
S4R	TRADITIONAL FOUNDATION & FRAMING PLAN – REVERSE
S5	STRUCTURAL DETAILS
S6	STRUCTURAL DETAILS
T24.1	ENERGY CALCULATIONS
T24.2	ENERGY CALCULATIONS
T24.3	ENERGY CALCULATIONS

BUILDING INFORMATION

GOVERNING CODES: APPROVAL OF THIS PROJECT SHALL COMPLY WITH THE 2022 CALIFORNIA RESIDENTIAL CODE (CRC), 2022 CALIFORNIA MECHANICAL CODE (CMC), 2022 CALIFORNIA PLUBLING CODE (CPC), 2022 CALIFORNIA ELECTRICAL CODE (CEC), 2022 CALIFORNIA ENERGY CODE (CEC), 2022 CALIFORNIA FIRE CODE (CFC), 2022 CALIFORNIA GREEN BUILDING CODE (CGBC) AND CITY OF PERRIS MUNICIPAL CODE.

SITE ADDRESS:

GOVERNING AGENCY: CITY OF PERRIS, CA.
OCCUPANCY GROUP: R3
STORIES: 1
TYPE OF CONSTRUCTION: VB

CONTACT LOCAL UTILITY COMPANIES REGARDING GAS, ELECTRIC, WATER AND SEWER SERVICES TO THIS DETACHED ADU. FOR SEPTIC SYSTEMS CONTACT CITY OF PERRIS ENVIRONMENTAL HEALTH. SEE EXAMPLE SITE PLAN, SHEET AS.2, FOR MORE INFORMATION PRIOR TO ANY SITE TRENCHING CALL 811.

811 Know what's below. 811 before you dig.

ZONING INFORMATION

CONTACT CITY OF PERRIS FOR THE INFORMATION BELOW
PLANNING: PHONE: (951) 943-5003
GIS MAP: www.cityofperris.org/our-city/about-perris/maps

ZONING :

OVERLAY :

LOT SIZE :

EXISTING HABITABLE SQ. FT. :

EXISTING FAR :

MAX. ALLOWABLE FAR :

PROPOSED FAR :

FLOOR AREA OF GARAGE:

EXISTING LOT COVERAGE:

ALLOWABLE LOT COVERAGE :

PROPOSED LOT COVERAGE :

LOT SLOPE :

ADU SETBACKS ALLOWED : PROPOSED :

FRONT- FRONT-
REAR- REAR-
SIDE- SIDE-
STREET SIDE- STREET SIDE-

OFF STREET PARKING :

REQUIRED: PROVIDED:

A DIMENSIONED SITE PLAN DRAWN TO SCALE SHALL BE PROVIDED SHOWING THE FOLLOWING: NORTH ARROW, PROPERTY LINES, EASEMENTS, STREETS, EXISTING AND PROPOSED BUILDINGS, AND STRUCTURES, DIMENSIONED SETBACKS, AND MINIMUM SEPARATION FROM EXISTING STRUCTURES
IF A GRADING PLAN IS REQUIRED, THE GRADING PLAN SHALL BE SUBMITTED TO PUBLIC WORKS FOR REVIEW AND APPROVAL. SEE SHEET AS.1 FOR FURTHER INFORMATION ON GRADING PLAN THRESHOLDS AND REQUIREMENTS.

DIRECTORY

SITE PLAN & TITLE SHEET INFORMATION PREPARED BY:

COMPANY
CONTACT PERSON
ADDRESS

PHONE
EMAIL

PROPERTY OWNER:

NAME
ADDRESS

PHONE
EMAIL

BUILDING DEPARTMENT:

101 N D STREET,
PERRIS, CA 92570
P. (951)943-6100

PROJECT DESCRIPTION

NEW CONSTRUCTION OF A ONE STORY, STUDIO, 1 BATH, DETACHED 499 S.F. ACCESSORY DWELLING UNIT
HABITABLE AREA: 499 SQFT.
CRAFTSMAN PATIO AREA: 397 SQFT.
SPANISH PATIO AREA: 419 SQFT.
TRADITIONAL PATIO AREA: 84 SQFT.

LEGAL DESCRIPTION

VICINITY MAP

PROVIDED BY OWNER

APN

APPLICANT AGREEMENT

APPLICANT AGREES TO PROVIDE ALL NECESSARY INFORMATION REQUIRED TO COMPLETE THESE CONSTRUCTION DOCUMENTS. MODIFICATIONS TO THE PERMIT READY DOCUMENTS PROVIDED BY DESIGN PATH STUDIO ARE TO BE DISCLOSED BY THE APPLICANT AND APPROVED BY THE AUTHORITY HAVING JURISDICTION. ANY MODIFICATIONS TO THESE CONSTRUCTION DOCUMENTS REQUIRES EACH SHEET TO BE SIGNED BY THE PERSON WHO MADE THE CHANGES. ANY ADDITIONAL SHEETS INCORPORATED INTO THESE DOCUMENTS ALSO REQUIRES A SIGNATURE BY THE PERSON WHO PREPARED THE INFORMATION. THE FOUNDATION DESIGN FOR THESE PERMIT READY CONSTRUCTION DOCUMENTS ASSUMES STANDARD SOILS CONDITIONS AND LEVEL TOPOGRAPHY. IF SITE SPECIFIC CONDITIONS REQUIRE A FOUNDATION DESIGN BEYOND WHAT IS PROVIDED IN THESE DOCUMENTS THEN THE APPLICANT IS TO PROVIDE A NEW FOUNDATION DESIGN WHICH COMPLIES WITH THE RECOMMENDATIONS OF THE GEOTECHNICAL ENGINEER'S REPORT.

BY SIGNING BELOW THE APPLICANT AGREES TO AND AFFIRMS ALL STATEMENTS INCLUDED HEREIN AND WILL COMPLY WITH ALL LOCAL CODE REQUIREMENTS.

SIGNATURE:_____ DATE:_____

HERS NOTES

1. PROPERLY COMPLETED AND ELECTRONICALLY SIGNED CERTIFICATE OF INSTALLATION (CF2R FORMS) SHALL BE POSTED WEATHER PROTECTED WITHIN BUILDING FOR REVIEW BY INSPECTORS – EES 10–103(a)3, 10–103(b)1.A – BY THE INSTALLING CONTRACTOR AND SUBMITTED TO THE FIELD INSPECTOR DURING CONSTRUCTION AT THE SITE. FOR PROJECTS REQUIRING HERS VERIFICATION, THE CF2R FORMS SHALL BE REGISTERED WITH A CALIFORNIA APPROVED HERS PROVIDER DATA REGISTRY WITH ITS OWN UNIQUE 21 DIGIT REGISTRATION NUMBER LOCATED AT THE BOTTOM OF EACH PAGE. THE FIRST 12 DIGITS WILL MATCH THE REGISTRATION NUMBER ASSOCIATED WITH THE CF1R FORM. CERTIFICATE OF OCCUPANCY WILL NOT BE ISSUED UNTIL THE CF2R FORMS ARE REVIEWED AND APPROVED.

2. PROPERLY COMPLETED & ELECTRONICALLY SIGNED AND REGISTERED CERTIFICATE(S) OF FIELD VERIFICATION AND DIAGNOSTIC TESTING (CF3R) SHALL BE POSTED WEATHER PROTECTED WITHIN THE BUILDING SITE BY A CERTIFIED HERS RATER. A REGISTERED CF3R WILL HAVE A UNIQUE 25 DIGIT REGISTRATION NUMBER LOCATED AT THE BOTTOM OF EACH PAGE. THE FIRST 20 DIGITS OF THE NUMBER WILL MATCH THE REGISTRATION NUMBER ASSOCIATED WITH THE CF2R. CERTIFICATE OF OCCUPANCY WILL NOT BE ISSUED UNTIL THE CF3R IS REVIEWED AND APPROVED. EES 10–103(a)3, 10–103(b)1.A.

3. CF1R REGISTRATION FORMS ARE LOCATED ON THE PLANS. IF REGISTRATION IS REQUIRED, A WATER–MARK AND REGISTRATION NUMBER WILL BE VISIBLE. QUALITY INSULATION INSPECTION – Hire HERS rater early before drywall. VARIABLE CAPACITY HEAT PUMP – Ductless units entirely located in conditioned space, Airflow in habitable rooms, wall mounted thermostat in zones greater than 150 s.f., verify heat pump rated capacity, and Refrigerant charge. At ADU –Studio, 1 Bed, 2 Bed 2 Bath & 3 BED – R–6 ducts in conditioned space, Verified EER/EER2, SEER/SEER2, HSPF, Heat pump rated heating capacity, Min Airflow, Refrigerant Charge, & Fan watt Draw/Fan Efficacy. KITCHEN RANGE HOOD CFM VERIFICATION (100 CFM , = 3 SONES) IAQ MECHANICAL VENTILATION – See new ducting requirements Table 150.0–H

4. FOR IAQ FAN – SEE UPDATED CALCULATIONS FOR CFM REQUIRED FOR A CONTINUOUSLY OPERATING EXHAUST FAN. PROVIDE A TIMER SWITCH WITH A MANUAL OFF AND A SOUND RATING OF 1 SONE (3 SONES MAX FOR AN INTERMITTENT FAN). THIS FAN TO PROVIDE A WHOLE BUILDING INDOOR AIR QUALITY VENTILATION WITH OUTDOOR AIR IN COMPLIANCE WITH ASHRAE STANDARD 62.2 AS ADOPTED BY THE CALIFORNIA ENERGY COMMISSION.

5. PLEASE SEE SITE SPECIFIC CALCALTIONS FOR kWdc REQUIREMENTS.Solar exemption is 1.8 kWdc.

6. SPECIAL FEATURES: VCHP required items listed above, exposed slab flooring, and NEEA rated heat pump water heater; specific brand/model or eq., Non–Std duct location (ADU 3 Bed), and Solar exemption 2 was taken at Studio & 1 Bed

7. NEW 2022 ELECTRIC READY REQUIREMENTS FOR NEW CONSTRUCTION: IF HEAT PUMP WATER HEATER IS NOT INSTALLED, PROVIDE SPACE FOR THIS TYPE OF WATER HEATER. A 240v OUTLET IS REQUIRED FOR WATER HEATER, DRYER, AUTO CHARGING, AND STOVE INCLUDING BREAKER SPACE. ENERGY STORAGE SYSTEM FOR A FUTURE BATTERY SYSTEM (BATTERY READY) IS REQUIRED IF FULL SYSTEM IS NOT INSTALLED.

REQUIRED SUPPLEMENTAL INFORMATION - TO BE COMPLETED BY OWNER

additional plan information provided by owner:

X COMPLETED

- [ ] TITLE SHEET (T1.1) INFORMATION FILLED OUT
- [ ] SITE PLAN SHEET (AS.2) PROVIDED IN PLAN SET FOR CITY REVIEW
- [ ] UPDATED SITE SPECIFIC TITLE 24 ENERGY CALCULATION REPORT WITH CORRECT NAME, ADDRESS, AND EXACT ORIENTATION FOR SITE SPECIFIC CONDITIONS. OWNER SHOULD CONTACT AN ENERGY CONSULTANT TO OBTAIN UPDATES TO THE REPORTS.
- [ ] CONSTRUCTION AND DEMOLITION FORM
- [ ] HOLD HARMLESS AGREEMENT
- STANDARD ADU PLANS SHALL NOT BE USED FOR CONVERSIONS OR CODE ENFORCEMENT CASES

exterior style selection:

X SELECTION MUST MATCH THE EXISTING DWELLING UNIT (HOME)

- [ ] CRAFTSMAN
- [ ] SPANISH
- [ ] TRADITIONAL

exterior wall material:

X SELECTION(S)

EXTERIOR WALL COLOR OF PRINCIPAL DWELLING UNIT _____
(EXTERIOR WALL COLOR OF ADU SHALL MATCH PRINCIPAL DWELLING UNIT)

- [ ] STUCCO / MANUFACTURER COLOR & ICC/ESR _____
- [ ] STONE VENEER / MANUFACTURER COLOR & ICC/ESR _____
- [ ] FIBER CEMENT - SIDING / MANUFACTURER COLOR & ICC/ESR _____
- [ ] WOOD SIDING / MANUFACTURER COLOR & ICC/ESR _____
- [ ] OTHER _____

window and trim color:

X SELECTION

- [ ] WHITE
- [ ] TAN
- [ ] DARK BRONZE
- [ ] OTHER WINDOW COLOR_____

WINDOW TRIM COLOR OF EXISTING DWELLING UNIT _____
(WINDOW TRIM COLOR FOR THE ADU SHALL MATCH EXISTING DWELLING UNIT WINDOW COLOR)

roof material:

X SELECTION

ROOF COLOR OF PRINCIPAL DWELLING UNIT _____
(ROOF COLOR OF ADU SHALL MATCH PRINCIPAL DWELLING UNIT)

TRIM COLOR OF PRINCIPAL DWELLING _____
(TRIM COLOR OF ADU SHALL MATCH PRINCIPAL DWELLING UNIT TRIM)

- [ ] CONCRETE TILE ROOF - EAGLE ROOF PRODUCTS INC. - IAMPO UES-ER 1900 MINIMUM 2-1/2:12 ROOF SLOPE. COLOR OF CONCRETE TILE ROOF _____
- [ ] ARCHITECTURAL GRADE SHINGLE - CERTAINTEED - ICC-ES-ESR-1389 & ESR-3537 MINIMUM 2:12 ROOF SLOPE. COLOR OF ARCHITECTURAL GRADE SHINGLES_____
- [ ] WOOD SHAKE - ICC ESR 2867 - MINIMUM 4:12 ROOF SLOPE. COLOR OF WOOD SHAKE ROOF _____
- [ ] OTHER ROOF MATERIAL / COLOR_____

water meter information:

X SELECTION

- [ ] UPGRADED METER
- [ ] EXISTING METER TO REMAIN
- [ ] NEW METER

deferred submittals under separate permit to be obtained by owner:

X TO BE COMPLETED

- [ ] FIRE SPRINKLERS: TO BE PROVIDED BY A FIRE SPRINKLER CONTRACTOR FOR THE RESIDENTIAL FIRE SPRINKLER PLANS (WHEN REQUIRED)
- [ ] PHOTOVOLTAIC SYSTEM: THE PV SYSTEM MUST BE INSTALLED, OPERATIONAL, AND FINAL PRIOR TO FINAL BUILDING INSPECTION AND APPROVAL FOR THE ADU. APPLICANT SHALL IDENTIFY THE SIZE OF THE PV SYSTEM PER ENERGY REPORT. PLANS TO BE PROVIDED BY A SOLAR PANEL PROVIDER (WHEN REQUIRED)

fire sprinkler information:

X SELECTION

- [ ] EXISTING RESIDENCE CURRENTLY HAS FIRE SPRINKLERS
- [ ] EXISTING RESIDENCE DOES NOT CURRENTLY HAVE FIRE SPRINKLERS
- [ ] PROPERTY IS LOCATED IN THE VERY HIGH FIRE HAZARD SEVERITY ZONE. CONTACT CITY OF PERRIS FOR MORE INFORMATION ON VHFSZ.
- [ ] PROPERTY IS NOT LOCATED IN THE VERY HIGH FIRE HAZARD SEVERITY ZONE

NEW ADU IS REQUIRED TO HAVE FIRE SPRINKLERS IF THE EXISTING RESIDENCE HAS FIRE SPRINKLERS. IN ORDER FOR THE ADU TO NOT BE EQUIPPED WITH RESIDENTIAL FIRE SPRINKLERS ALL OF THE FOLLOWING HAVE TO BE MET PER THE RESIDENTIAL CODE. "PER THE CALIFORNIA RESIDENTIAL CODE, SECTION R313.2, #2 ACCESSORY DWELLING UNIT, PROVIDING THAT ALL OF THE FOLLOWING ARE MET: 2.1 THE UNIT MEETS THE DEFINITION OF AN ACCESSORY DWELLING UNIT AS DEFINED IN THE GOVERNMENT CODE SECTION 65852.2; 2.2 THE EXISTING PRIMARY RESIDENCE DOES NOT HAVE SPRINKLERS; 2.3 THE ACCESSORY DETACHED DWELLING UNIT DOES NOT EXCEED 1,200 SQUARE FEET IN SIZE AND 2.4 THE UNIT IS ON THE SAME LOT AS THE PRIMARY RESIDENCE."
IF THE EXISTING HOME IS EQUIPPED WITH RESIDENTIAL FIRE SPRINKLERS THEN THE ADU WILL BE REQUIRED TO HAVE RESIDENTIAL FIRE SPRINKLERS INSTALLED/ SPRINKLER PLANS WILL BE REQUIRED TO BE SUBMITTED TO THE FIRE DEPARTMENT FOR REVIEW AND APPROVAL.

fire rated details:

X SELECTION

- [ ] ROOF EAVE DETAIL 1,2,3,5,6,7/ A5.2
- [ ] WALL FINISH DETAIL 9B,12B,15B/ A5.1

WINDOW & DOOR HIGH FIRE SEVERITY NOTES 14, 15, 16, 17 & 18 ON G0.4

FIRE RATED DETAILS ABOVE ARE TO BE USED WHEN WALLS AND ROOF EAVES ARE LESS THAN 5 FT FROM PROPERTY LINE IN AN UNSPRINKLERED BUILDING OR LESS THAN 3 FT FROM PROPERTY LINE IN SPRINKLERED BUILDINGS PER TABLE R302.1(1) & R302.1(2). FIRE RATED DETAILS ABOVE ARE ALSO TO BE USED WHEN THE ADU IS LESS THAN 10 FT FROM THE MAIN DWELLING UNIT IN AN UNSPRINKLERED BUILIDNG OR LESS THAN 6 FT FROM THE MAIN DWELLING UNIT IN A SPRINKLERED BUILDING.

sewer waste water information:

X SELECTION

- [ ] ADU TO HAVE NEW CONNECTION TO EMWD SEWER MAIN
- [ ] ADU TO CONNECT TO EXISTING RESIDENCE SEWER LATERAL
- [ ] SEPTIC - REQUIRES HEALTH DEPARTMENT APPROVAL

DISTANCE TO CONNECTION_____

electrical service information:

X SELECTION

- [ ] UPGRADED SERVICE
- [ ] EXISTING SERVICE TO REMAIN
- [ ] NEW SERVICE

SIZE OF EXISTING SERVICE_____ SIZE OF NEW SERVICE_____

CONTACT SCE, REGARDING ELECTRIC SERVICES TO THIS DETACHED ADU.
EXISTING SERVICE UPGRADE OR NEW SERVICE WILL REQUIRE A SEPARATE PERMIT FROM THE CITY OF PERRIS.

ENERGY STORAGE SYSTEM IS REQUIRED. PLEASE REFER TO NOTES ON G0.3

gas service information:

X SELECTION

- [ ] UPGRADED SERVICE
- [ ] EXISTING SERVICE TO REMAIN
- [ ] NEW SERVICE

SIZE OF EXISTING SERVICE_____ SIZE OF NEW SERVICE_____

lot size and impervious area:

Total Lot Size = _____
(Existing building footprint, patios, decks, hardscape, etc.)
Total Area of Existing Impervious Surfaces = _____
(Existing building footprint, patios, decks, hardscape, etc.)
Total Area of New Impervious Surfaces = _____
(Increase to building footprint, patios, decks, hardscape, etc.)
Total Area of Replaced Impervious Surfaces = _____
(Replacement to building footprint, patios, decks, hardscape, etc.)

EXAMPLE GAS PIPE DIAGRAM

TO BE UPDATED FOR SITE SPECIFIC CONDITIONS

NOTE: EXISTING GAS SERVICE AND METER SIZE TO BE PROVIDED BY HOMEOWNER AND UPDATED ISOMETRIC LAYOUT PROVIDED BY DESIGNER OF CHOICE. CFH & BTUS PROVIDED AS SUGGESTED LOADS. OWNER/DESIGNER IS TO PROVIDE ACCURATE INFORMATION.

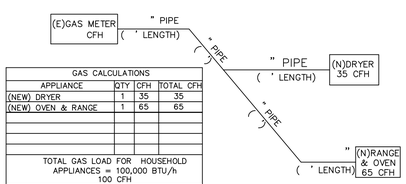

GAS CALCULATIONS			
APPLIANCE	QTY	CFH	TOTAL CFH
(NEW) DRYER	1	35	35
(NEW) OVEN & RANGE	1	65	65
TOTAL GAS LOAD FOR HOUSEHOLD APPLIANCES = 100,000 BTU/h 100 CFH			
PIPE SIZE SCHEDULE 40 METALLIC PIPE 125' LENGTH PER TABLE 1216.2(1) CALIFORNIA PLUMBING CODE			

SIZE	½"	¾"	1"	1¼"	1½"	2"
CFH	44	92	173	355	532	1,020

SPECIFICATIONS FOR EQUIPMENT SHALL BE KEPT ON SITE TO PROVIDE TO THE CITY OF PERRIS BUILDING INSPECTOR

site / soils / foundation information

PLEASE CHECK THE BOX THAT APPLIES TO YOUR PROJECT SITE

YES	NO	QUALIFIER
[ ]	[ ]	DOES THE PROJECT ABUT SEVERE ASCENDING OR DESCENDING SLOPES EXCEEDING 35%?
[ ]	[ ]	DOES THE PROJECT INCLUDE RETAINING WALLS?
[ ]	[ ]	DOES THE SITE CONTAIN ANY KNOWN GEOTECHNICAL HAZARDS?
[ ]	[ ]	DOES THE EXISTING DWELLING ON THE SITE HAVE A CONVENTIONAL FOUNDATION?
[ ]	[ ]	DOES THE EXISTING DWELLING FOUNDATION SHOW ANY SIGNS OF DISTRESS?

methane gas hazards:

YES	NO
[ ]	[ ]

DESIGN PATH STUDIO
architecture + engineering + planning
DESIGNPATHSTUDIO.COM

BY USING THESE PERMIT READY CONSTRUCTION DOCUMENTS, THE RECIPIENT ACKNOWLEDGES, ACCEPTS AND VOLUNTARILY AFFIRMS THE FOLLOWING CONDITIONS:
1. THE USE OF THIS INFORMATION IS RESTRICTED TO THE ORIGINAL PROJECT FOR WHICH IT WAS PREPARED FOR THE PERMIT READY ACCESSORY DWELLING UNIT (ADU) PROGRAM FOR THE CITY OF PERRIS ONLY. THIS IS A LIMITED SET OF STANDARDIZED ADU PLANS AND SPECIFICATIONS APPROVED BY THE CITY OF PERRIS BUILDING DEPARTMENT. BUILDING CODES DO CHANGE OVER TIME AND RECIPIENT SHALL ENSURE FULL COMPLIANCE UNDER ALL CODES THEN IN EFFECT AT THE TIME OF THE SUBJECT PERMIT. THIS DOES NOT ELIMINATE OR REDUCE THE RECIPIENT'S RESPONSIBILITY TO VERIFY ANY AND ALL INFORMATION RELEVANT TO THE RECIPIENT'S WORK AND RESPONSIBILITY ON THIS PROJECT. DESIGN PATH STUDIO SHALL NOT BE RESPONSIBLE FOR TRANSLATION ERRORS. DO NOT USE THESE CONSTRUCTION DOCUMENTS IF THE PERMIT HAS EXPIRED OR IS REVOKED AT ALL.
2. THE RECIPIENT RECOGNIZES AND ACKNOWLEDGES THAT THE USE OF THIS INFORMATION WILL BE AT THEIR SOLE RISK AND WITHOUT ANY LIABILITY OR LEGAL EXPOSURE TO DESIGN PATH STUDIO. NO WARRANTIES OF ANY NATURE, WHETHER EXPRESS OR IMPLIED, SHALL ATTACH TO THESE DOCUMENTS AND THE INFORMATION CONTAINED THEREON. ANY USE, REUSE, OR ALTERATION OF THESE DOCUMENTS BY THE RECIPIENT OR BY OTHERS WILL BE AT THE RECIPIENT'S RISK AND FULL LEGAL RESPONSIBILITY. FURTHERMORE, THE RECIPIENT WILL, TO THE FULLEST EXTENT PERMITTED BY LAW, DEFEND, INDEMNIFY AND HOLD DESIGN PATH STUDIO AND ITS ARCHITECTS HARMLESS FROM ANY AND ALL CLAIMS, SUITS, LIABILITY, DEMANDS, JUDGMENTS, OR COSTS ARISING OUT OF OR RESULTING THERE FROM ANY USE OF THESE CONSTRUCTION DOCUMENTS FOR OR ON ACCOUNT OF ANY INJURY, DEATH, DAMAGE OR LOSS TO PERSONS OR PROPERTY, DIRECT OR CONSEQUENTIAL DAMAGES IN ANY AMOUNT. THIS INDEMNITY DOES NOT APPLY TO THE SOLE NEGLIGENCE OR WILLFUL MISCONDUCT OF DESIGN PATH STUDIO OR ITS ARCHITECTS.
3. THE DESIGNS REPRESENTED BY THESE PLANS ARE COPYRIGHTED AND ARE SUBJECT TO COPYRIGHT PROTECTION.
4. IF THE RECIPIENT DOES NOT AGREE WITH THE ABOVE CONDITIONS, DO NOT PROCEED WITH CONSTRUCTION OF AN ADU OR OTHER IMPROVEMENT UNDER THESE PLANS AT ALL.

project
City of Perris
Pre-Approved
ADU Program

revisions
01

description
Title Sheet

date	4 April 2025
project no.	PERRIS PRADU
drawn by	DESIGN PATH STUDIO
sheet no.	T1.1

FOR USE IN THE CITY OF PERRIS

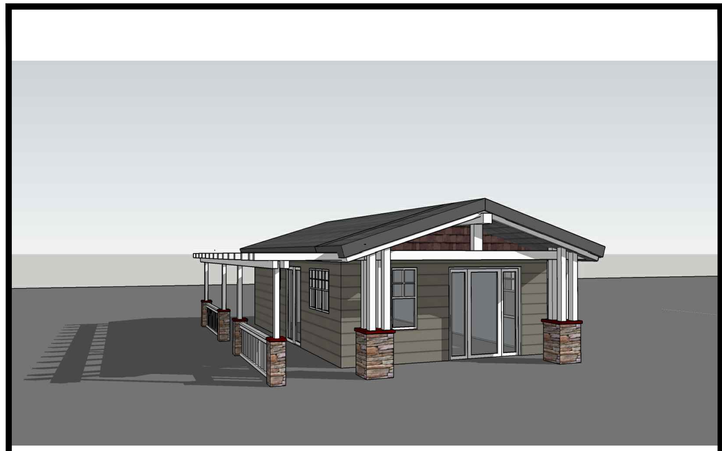

Studio -Craftsman View #1

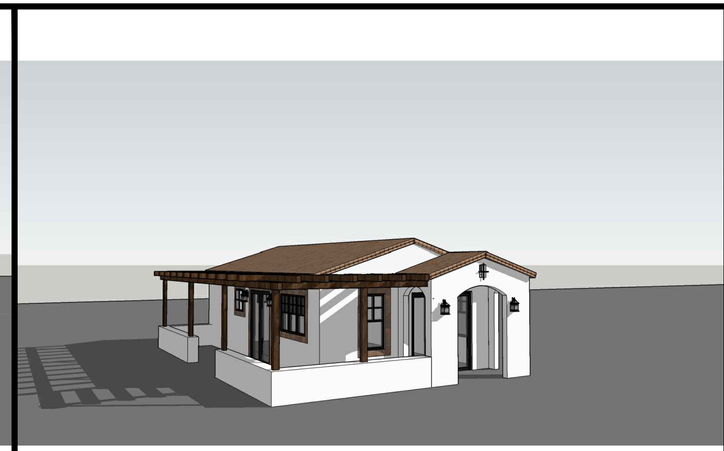

Studio -Spanish View #1

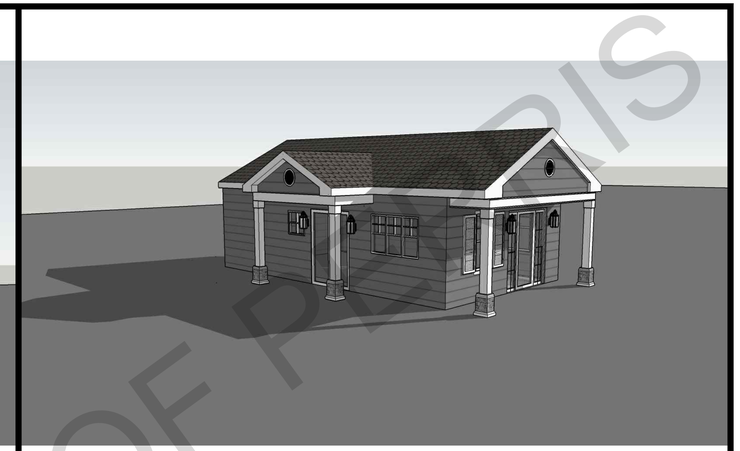

Studio -Traditional View #1

Studio -Craftsman View #2

Studio -Spanish View #2

Studio -Traditional View #2

Studio -Craftsman View #3

Studio -Spanish View #3

Studio -Traditional View #3

FOR USE IN IN THE CITY OF PERRIS

DESIGN PATH STUDIO
architecture + engineering + planning
DESIGNPATHSTUDIO.COM

BY USING THESE PERMIT READY CONSTRUCTION DOCUMENTS, THE RECIPIENT ACKNOWLEDGES, ACCEPTS AND VOLUNTARILY AFFIRMS THE FOLLOWING CONDITIONS:
1. THE USE OF THIS INFORMATION IS RESTRICTED TO THE ORIGINAL PROJECT FOR WHICH IT WAS PREPARED FOR THE PERMIT READY ACCESSORY DWELLING UNIT (ADU) PROGRAM FOR THE CITY OF PERRIS ONLY. THIS IS A LIMITED SET OF STANDARDIZED ADU PLANS AND SPECIFICATIONS APPROVED BY THE CITY OF PERRIS BUILDING DEPARTMENT. BUILDING CODES DO CHANGE OVER TIME AND RECIPIENT SHALL ENSURE FULL COMPLIANCE UNDER ALL CODES THEN IN EFFECT AT THE TIME OF THE SUBJECT PERMIT. THIS DOES NOT ELIMINATE OR REDUCE THE RECIPIENT'S RESPONSIBILITY TO VERIFY ANY AND ALL INFORMATION RELEVANT TO THE RECIPIENT'S WORK AND RESPONSIBILITY ON THIS PROJECT. DESIGN PATH STUDIO SHALL NOT BE RESPONSIBLE FOR TRANSLATION ERRORS. DO NOT USE THESE CONSTRUCTION DOCUMENTS IF THE PERMIT HAS EXPIRED OR IS REVOKED AT ALL.
2. THE RECIPIENT RECOGNIZES AND ACKNOWLEDGES THAT THE USE OF THIS INFORMATION WILL BE AT THEIR SOLE RISK AND WITHOUT ANY LIABILITY OR LEGAL EXPOSURE TO DESIGN PATH STUDIO. NO WARRANTIES OF ANY NATURE, WHETHER EXPRESS OR IMPLIED, SHALL ATTACH TO THESE DOCUMENTS AND THE INFORMATION CONTAINED THEREON. ANY USE, REUSE, OR ALTERATION OF THESE DOCUMENTS BY THE RECIPIENT OR BY OTHERS WILL BE AT THE RECIPIENT'S RISK AND FULL LEGAL RESPONSIBILITY. FURTHERMORE, THE RECIPIENT WILL, TO THE FULLEST EXTENT PERMITTED BY LAW, DEFEND, INDEMNIFY AND HOLD DESIGN PATH STUDIO AND ITS ARCHITECTS HARMLESS FROM ANY AND ALL CLAIMS, SUITS, LIABILITY, DEMANDS, JUDGMENTS, OR COSTS ARISING OUT OF OR RESULTING THERE FROM ANY USE OF THESE CONSTRUCTION DOCUMENTS FOR OR ON ACCOUNT OF ANY INJURY, DEATH, DAMAGE OR LOSS TO PERSONS OR PROPERTY, DIRECT OR CONSEQUENTIAL DAMAGES IN ANY AMOUNT. THIS INDEMNITY DOES NOT APPLY TO THE SOLE NEGLIGENCE OR WILLFUL MISCONDUCT OF DESIGN PATH STUDIO OR ITS ARCHITECTS.
3. THE DESIGNS REPRESENTED BY THESE PLANS ARE COPYRIGHTED AND ARE SUBJECT TO COPYRIGHT PROTECTION.
4. IF THE RECIPIENT DOES NOT AGREE WITH THE ABOVE CONDITIONS, DO NOT PROCEED WITH CONSTRUCTION OF AN ADU OR OTHER IMPROVEMENT UNDER THESE PLANS AT ALL.

project
City of Perris
Pre-Approved
ADU Program

revisions
0

description
Exterior
Style
Options

date 4 April 2025

project no. PERRIS PRADU

drawn by DESIGN PATH STUDIO

sheet no. T1.2

(A) EXAMPLE BMP — BIORETENTION DETAIL FOR STANDARD PROJECTS ONLY

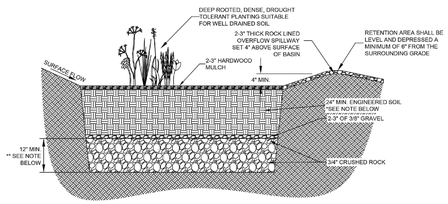

*BIORETENTION "ENGINEERED SOIL" LAYER SHALL BE MINIMUM 24" DEEP "SANDY LOAM" SOIL MIX WITH NO MORE THAN 5% CLAY CONTENT. THE MIX SHALL CONTAIN 50-60% SAND, 20-30% COMPOST OR HARDWOOD MULCH, AND 20-30% TOPSOIL.

**3/4" CRUSHED ROCK LAYER SHALL BE A MINIMUM OF 12" BUT MAY BE DEEPENED TO INCREASE THE INFILTRATION AND STORAGE ABILITY OF THE BASIN.

THE EFFECTIVE AREA OF THE BASIN SHALL BE LEVEL AND SHALL BE SIZED BASED ON CITY OF ENCINITAS BMP DESIGN MANUAL CALCULATIONS.

(B) EXAMPLE BMP — VEGETATED SWALE

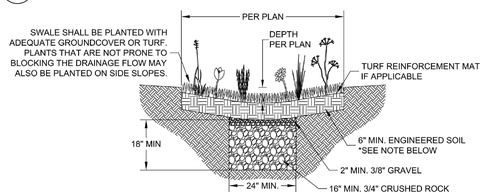

**"ENGINEERED SOIL" LAYER SHALL BE MINIMUM 6" DEEP "SANDY LOAM" SOIL MIX WITH NO MORE THAN 5% CLAY CONTENT. THE MIX SHALL CONTAIN 50-60% SAND, 20-30% COMPOST OR HARDWOOD MULCH, AND 20-30% TOPSOIL.

NOTE: VEGETATED SWALES ON GRADES OF MORE THAN 2.5% MUST INSTALL CHECK DAMS TO LIMIT THE SLOPE OF THE SWALE TO 2.5% UNLESS OTHERWISE APPROVED BY THE DIRECTOR OF ENGINEERING SERVICES.

NOTE: NO FILTER FABRIC IS TO BE USED IN THIS SECTION.

EXISTING SWIMMING POOL REQUIREMENTS

WHEN A BUILDING PERMIT IS ISSUED FOR THE CONSTRUCTION OF A NEW SWIMMING POOL OR SPA OR THE REMODELING OF AN EXISTING SWIMMING POOL OR SPA AT A PRIVATE SINGLE-FAMILY HOME, THE RESPECTIVE SWIMMING POOL OR SPA SHALL BE EQUIPPED WITH AT LEAST TWO OF THE FOLLOWING SEVEN DROWNING PREVENTION SAFETY FEATURES:
(1) AN ENCLOSURE THAT MEETS THE REQUIREMENTS OF SECTION 115923 AND ISOLATES THE SWIMMING POOL OR SPA FROM THE PRIVATE SINGLE-FAMILY HOME.
(2) REMOVABLE MESH FENCING THAT MEETS AMERICAN SOCIETY FOR TESTING AND MATERIALS (ASTM) SPECIFICATIONS F2286 STANDARDS IN CONJUNCTION WITH A GATE THAT IS SELF-CLOSING AND SELF-LATCHING AND CAN ACCOMMODATE A KEY LOCKABLE DEVICE.
(3) AN APPROVED SAFETY POOL COVER, AS DEFINED IN SUBDIVISION (D) OF SECTION 115921.
(4) EXIT ALARMS ON THE PRIVATE SINGLE-FAMILY HOME'S DOORS THAT PROVIDE DIRECT ACCESS TO THE SWIMMING POOL OR SPA. THE EXIT ALARM MAY CAUSE EITHER AN ALARM NOISE OR A VERBAL WARNING, SUCH AS A REPEATING NOTIFICATION THAT "THE DOOR TO THE POOL IS OPEN."
(5) A SELF-CLOSING, SELF-LATCHING DEVICE WITH A RELEASE MECHANISM PLACED NO LOWER THAN 54 INCHES ABOVE THE FLOOR ON THE PRIVATE SINGLE-FAMILY HOME'S DOORS PROVIDING DIRECT ACCESS TO THE SWIMMING POOL OR SPA.
(6) AN ALARM THAT, WHEN PLACED IN A SWIMMING POOL OR SPA, WILL SOUND UPON DETECTION OF ACCIDENTAL OR UNAUTHORIZED ENTRANCE INTO THE WATER. THE ALARM SHALL MEET AND BE INDEPENDENTLY CERTIFIED TO THE ASTM STANDARD F2208 "STANDARD SAFETY SPECIFICATION FOR RESIDENTIAL POOL ALARMS," WHICH INCLUDES SURFACE MOTION, PRESSURE, SONAR, LASER, AND INFRARED TYPE ALARMS. A SWIMMING PROTECTION ALARM FEATURE DESIGNED FOR INDIVIDUAL USE, INCLUDING AN ALARM ATTACHED TO A CHILD THAT SOUNDS WHEN THE CHILD EXCEEDS A CERTAIN DISTANCE OR BECOMES SUBMERGED IN WATER, IS NOT A QUALIFYING DROWNING PREVENTION SAFETY FEATURE.
(7) OTHER MEANS OF PROTECTION, IF THE DEGREE OF PROTECTION AFFORDED IS EQUAL TO OR GREATER THAN THAT AFFORDED BY ANY OF THE FEATURES SET FORTH ABOVE AND HAS BEEN INDEPENDENTLY VERIFIED BY AN APPROVED TESTING LABORATORY AS MEETING STANDARDS FOR THOSE FEATURES ESTABLISHED BY THE ASTM OR THE AMERICAN SOCIETY OF MECHANICAL ENGINEERS (ASME).
(B) BEFORE THE ISSUANCE OF A FINAL APPROVAL FOR THE COMPLETION OF PERMITTED CONSTRUCTION OR REMODELING WORK, THE LOCAL BUILDING CODE OFFICIAL SHALL INSPECT THE DROWNING SAFETY PREVENTION FEATURES REQUIRED BY THIS SECTION AND, IF NO VIOLATIONS ARE FOUND, SHALL GIVE FINAL APPROVAL.
EXCEPT AS PROVIDED IN SECTION 115925, WHEN A BUILDING PERMIT IS ISSUED FOR THE CONSTRUCTION OF A NEW SWIMMING POOL AND/OR SPA THE REMODELING OF AN EXISTING SWIMMING POOL AND/OR SPA AT A PRIVATE SINGLE-FAMILY HOME, THE RESPECTIVE SWIMMING POOL AND.OR SPA SHALL BE EQUIPPED WITH ITEM NO.1 SUBSECTION 115922 (A) AND AT LEAST ONE ADDITION ITEM OF THE FOLLOWING SEVEN DROWNING PREVENTION FEATURES.

SITE NOTES

1. THE APPLICANT SHALL PROVIDE A DIMENSIONED AND SCALED SITE PLAN SHOWING PROPERTY LINES, YARDS, DIMENSIONED SETBACKS, EASEMENTS, UTILITIES, STREETS, EXISTING AND PROPOSED BUILDINGS, MINIMUM SEPARATION FROM EXISTING STRUCTURES, AND FUEL MODIFICATION ZONES IF APPLICABLE

2. WHEN REQUIRED, THE APPLICANT SHALL IMPLEMENT SITE DESIGN STORMWATER BEST MANAGEMENT PRACTICES (BMP) AND LOW IMPACT DEVELOPMENT (LID) CONCEPTS SUCH AS IMPERVIOUS AREA DISPERSION, DRAINAGE TO NATURAL VEGETATION, REDUCTION IN IMPERVIOUS SURFACES, BREAKING UP HARDSCAPE AREA, ETC. SEE OPTION 'A' OR 'B'.

3. GRADING PERMIT MAY BE REQUIRED PENDING SITE SPECIFIC CONDITIONS. PERMIT REGULATIONS AND SUBMITTAL REQUIREMENTS CAN BE OBTAINED FROM THE CITY AT THE TIME OF BUILDING PERMIT APPLICATION SUBMISSION.

4. THE SUBMISSION OF ANY BUILDING, GRADING AND/OR DEVELOPMENT APPLICATIONS/PLANS SHALL INCLUDE ADEQUATE PROVISIONS TO PREVENT THE DISCHARGE OF POLLUTANTS BOTH ON AND OFF A CONSTRUCTION SITE. AT A MINIMUM THESE PROVISIONS SHALL INCLUDE: (1) FOR SITES THAT INCLUDE GROUND DISTURBING ACTIVITIES APPROPRIATE EROSION AND SEDIMENT CONTROL MEASURES; AND (2) SOIL STABILIZATION MEASURES; (3) WHERE PUMPING OF GROUND WATER MAY BE NECESSARY THE INCLUSION OF APPROPRIATE DEWATERING CONTROL MEASURES; (4) SITE-SPECIFIC SOURCE CONTROLS TO PREVENT THE RELEASE AND DISCHARGE OF ANY POLLUTANTS; AND (5) APPROPRIATE POLLUTION PREVENTION CONTROL MEASURES TO PREVENT THE RELEASE AND DISCHARGE OF ANY POLLUTANTS PER INDUSTRY ACCEPTABLE STANDARDS AS DEEMED APPROPRIATE BY THE CITY.

WALL AND PROJECTION SEPARATION REQUIREMENTS TO PROPERTY LINES AND ADJACENT BUILDINGS

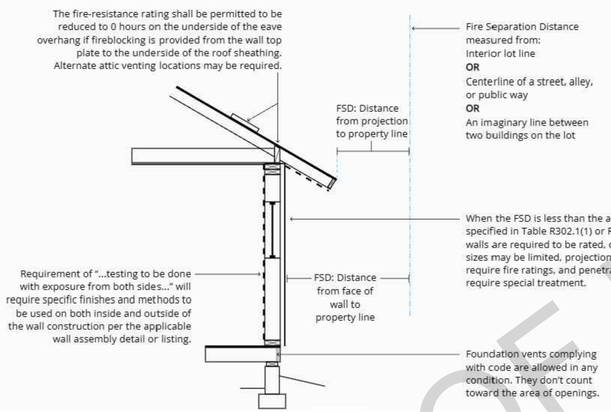

TABLE R302.1(1)
EXTERIOR WALLS

EXTERIOR WALL ELEMENT		MINIMUM FIRE-RESISTANCE RATING	MINIMUM FIRE SEPARATION DISTANCE
Walls	Fire-resistance rated	1 hour—tested in accordance with ASTM E119, UL 263 or Section 703.3 of the *California Building Code* with exposure from both sides	0 feet
	Not fire-resistance rated	0 hours	≥ 5 feet
Projections	Not allowed	NA	< 2 feet
	Fire-resistance rated	1 hour on the underside, or heavy timber, or fire-retardant-treated wood[a, b]	≥ 2 feet to < 5 feet
	Not fire-resistance rated	0 hours	≥ 5 feet
Openings in walls	Not allowed	NA	< 3 feet
	25% maximum of wall area	0 hours	3 feet
	Unlimited	0 hours	5 feet
Penetrations	All	Comply with Section R302.4	< 3 feet
		None required	3 feet

PLEASE NOTE: NOT ALL ELEVATIONS IN THESE PERMIT READY ADU PLANS COMPLY WITH 25% MAX OPENINGS RULE FOR NON-SPRINKLERED BUILDING AND THEREFORE A MINIMUM SEPARATION OF 5' TO THE PROPERTY LINE WOULD BE REQUIRED AND MINIMUM10' TO ADJACENT BUILDINGS (FOR NON-SPRINKLERED BUILDINGS).

WALLS OF UNSPRINKLERED BUILDINGS BETWEEN 5 AND 3 FEET TO PROPERTY LINES SHALL BE ONE-HOUR RATED CONSTRUCTION AND HAVE A MAXIMUM OF 25% OF UNPROTECTED/PROTECTED OPENINGS. [CRC TABLE R302.1(1)]

WALLS OF UNSPRINKLERED BUILDINGS CLOSER THAN 3 FEET TO PROPERTY LINES SHALL BE ONE-HOUR RATED CONSTRUCTION AND HAVE NO OPENING. [CRC TABLE R302.1(1)]

PROJECTIONS, INCLUDING EAVES, SHALL BE ONE-HOUR FIRE-RESISTIVE CONSTRUCTION, HEAVY TIMBER OR OF FRT WOOD IF THEY PROJECT INTO THE 3/5 FOOT (SPRINKLERED /UNSPRINKLERED) SETBACK AREA FROM THE PROPERTY LINE. THEY MAY PROJECT A MAXIMUM OF 12 INCHES BEYOND THE 3 FOOT SETBACK. [CRC TABLES R302.1(1) AND R302.1(2), WITH EXCEPTIONS]

THE APPLICANT SHALL PROVIDE A DIMENSIONED AND SCALED SITE PLAN SHOWING PROPERTY LINES, YARDS, DIMENSIONED SETBACKS, EASEMENTS, UTILITIES, STREETS, EXISTING AND PROPOSED BUILDINGS, MINIMUM SEPARATION
FROM EXISTING STRUCTURES, AND FUEL MODIFICATION ZONES IF APPLICABLE. SEE EXAMPLE SITE PLAN IN THIS SET FOR REFERENCE

THE APPLICANT SHALL IMPLEMENT SITE DESIGN STORMWATER BEST MANAGEMENT PRACTICES (BMP) AND LOW IMPACT DEVELOPMENT (LID) CONCEPTS SUCH AS IMPERVIOUS AREA DISPERSION, DRAINAGE TO NATURAL VEGETATION, REDUCTION IN IMPERVIOUS SURFACES, BREAKING UP HARDSCAPE AREA, ETC. APPLICANT IS REQUIRED TO INCORPORATE THESE CONCEPTS WITH NEW CONSTRUCTION

TABLE R302.1(2)
EXTERIOR WALLS—DWELLINGS *AND ACCESSORY BUILDINGS WITH AUTOMATIC RESIDENTIAL FIRE SPRINKLER PROTECTION*

EXTERIOR WALL ELEMENT		MINIMUM FIRE-RESISTANCE RATING	MINIMUM FIRE SEPARATION DISTANCE
Walls	Fire-resistance rated	1 hour—tested in accordance with ASTM E119, UL 263 or Section 703.2.2 of the *California Building Code* with exposure from the outside	0 feet
	Not fire-resistance rated	0 hours	3 feet[a]
Projections	Not allowed	NA	< 2 feet
	Fire-resistance rated	1 hour on the underside, or heavy timber, or fire-retardant-treated wood[b, c]	2 feet[a]
	Not fire-resistance rated	0 hours	3 feet
Openings in walls	Not allowed	NA	< 3 feet
	Unlimited	0 hours	3 feet[a]
Penetrations	All	Comply with Section R302.4	< 3 feet
		None required	3 feet[a]

FOR 1-HOUR FIRE-RATED WALLS AND EAVES, PLEASE REFERENCE DETAILS 9B, 12B, 15B ON SHEET A5.1 FOR FIRE RATED WALLS & DETAILS 1, 2, 3, 5, 6, 7 ON SHEET A5.2 FOR FIRE RATED EAVES

FIRE NOTES

1. NEW AND EXISTING BUILDINGS SHALL HAVE APPROVED ADDRESS NUMBERS OR APPROVED BUILDING IDENTIFICATION PLACED IN A POSITION THAT IS PLAINLY LEGIBLE AND VISIBLE FORM THE STREET OR ROAD FRONTING THE PROPERTY. THESE NUMBERS SHALL BE A MINIMUM OF 4 INCHES HIGH WITH A MINIMUM STROKE OF .5 INCHES. WHERE ACCESS IS BY MEANS OF A PRIVATE ROAD AND THE BUILDING CANNOT BE VIEWED FROM THE PUBLIC WAY, A MONUMENT, POLE OR OTHER SIGN OR MEANS SHALL BE USED TO IDENTIFY THE STRUCTURE. CFC SECTION 505.1
2. ALL FIRE APPARATUS ROADS ACCESS ROADS SHALL HAVE AN UNOBSTRUCTED VERTICAL CLEARANCE OF NO LESS THAN 13 FEET 6 INCHES.
3. SITE PLAN SHALL PROVIDE DIMENSIONS SHOWING REQUIRED FIRE APPARATUS ACCESS ROADS. FIRE ACCESS ROADWAYS SHALL HAVE AN UNOBSTRUCTED IMPROVED WIDTH OF NOT LESS THAN 24 FEET.
EXCEPTIONS. 1. RESIDENTIAL DWELLINGS NOT IN THE VERY HIGH FIRE HAZARD SEVERITY ZONE SHALL HAVE MINIMUM OF 20 FEET OF UNOBSTRUCTED IMPROVED WIDTH. 2. SINGLE-FAMILY RESIDENTIAL DRIVEWAYS SERVING NO MORE THAN TWO SINGLE-FAMILY DWELLING SHALL HAVE A MINIMUM OF 16 FEET OF UNOBSTRUCTED IMPROVED WIDTH.

FIRE ACCESS ROADWAYS
- SURFACE FIRE APPARATUS ACCESS ROADS SHALL BE DESIGNED AND MAINTAINED TO SUPPORT THE IMPOSED LOADS OF FIRE APPARATUS NOT LESS THAN 75,000 LBS AND SHALL BE PROVIDED WITH AN APPROVED PACED SURFACE TO PROVIDE ALL-WEATHER DRIVING CAPABILITIES.
- GATED ENTRANCES WITH CARD READERS, GUARD STATIONS OR CENTER MEDIANS, WHICH WILL HAVE SEPARATED LANES OF ONE-WAY TRAFFIC, SHALL BE NOT LESS THAN 14 FEET WIDE PER LANE.
- EXISTING LEGAL LOTS THAT HAVE EASEMENTS ACCESS ROADWAYS LESS THAN 20 FEET WIDE THAT PROVIDE PRIMARY ACCESS TO OTHER LOTS SHALL RECORD A COVENANT GRANTING EASEMENT RIGHTS FOR EMERGENCY VEHICLE INGRESS AND EGRESS PURPOSES AND SHALL RELINQUISH RIGHTS TO BUILD ANY BUILDING, WALL, FENCE, OR OTHER STRUCTURE WITHIN 5 FEET OF THE EXISTING ACCESS EASEMENT.
- ALL DEAD END FIRE APPARATUS ACCESS ROADWAY IN EXCESS OF 150 FEET IN LENGTH SHALL BE PROVIDED WITH AND APPROVED AREA FOR TURNING AROUND FIRE APPARATUS. ACCESS ROADS SERVING MORE THAN (4) FOUR DWELLING UNITS SHALL BE PROVIDED WITH A CUL-DE-SAC. THE MINIMUM UNOBSTRUCTED PAVED RADIUS WIDTH FOR A CULDE-SAC SHALL BE 36 FEET CURB LINE TO CURB LINE WITH NO PARKING. ALTERNATE TYPES OF TURN-AROUND (HAMMERHEADS, ETC.) MAY BE CONSIDERED BY THE FIRE MARSHAL AS NEEDED TO ACCOMPLISH THE INTENT OF THE FIRE CODE.

4. SECURITY GATES: AN AUTOMATIC GATE ACROSS A FIRE ACCESS ROADWAY OR DRIVEWAY SHALL BE EQUIPPED WITH AN APPROVED EMERGENCY KEY-OPERATED SWITCH OVERRIDING ALL COMMAND FUNCTIONS AND OPENING THE GATE. WHERE THIS SECTION REQUIRES AN APPROVED KEY-OPERATED SWITCH, IT MAY BE DUAL-KEYED OR EQUIPPED WITH DUAL SWITCHES PROVIDED TO FACILITATE ACCESS BY LAW ENFORCEMENT PERSONNEL. (CFC SECTION 503.6 AMENDMENT)

ALL GATES PROVIDING ACCESS FROM A ROAD TO A DRIVEWAY SHALL BE LOCATED A MINIMUM OF 30 FEET FROM THE NEAREST EDGE OF THE ROADWAY AND SHALL BE AT LEAST TWO FEET WIDER THAN THE WIDTH OF THE TRAFFIC LANE(S) SERVING THE GATE

GENERAL NOTES

1. SEE BUILDING PLANS FOR ALL OTHER DIMENSIONS AND NOTES NOT SHOWN.
2. SEE BUILDING PLANS AND SCHEDULES FOR ALL EXTERIOR DOOR AND WINDOW REFERENCES AND LOCATIONS.
3. YARD SETBACKS ARE TO BE MEASURED FROM THE EXTERIOR WALL FINISH TO THE PROPERTY LINE AND NOT FROM THE OUTSIDE OF THE FOOTING (OR FACE OF STUDS). THE PLANS MUST BE DESIGNED WITH THE WALL FINISH THICKNESS (I.E. 7/8" STUCCO, ETC.) ADDED TO THE PLAN FOR THE SETBACK MEASUREMENT. THE FIELD INSPECTOR WILL ADD THE PLANNED WALL FINISH THICKNESS TO THE FOUNDATION SETBACK.
4. NEW ELECTRIC SERVICE IS TO BE LOCATED - POOLS, SPAS, WALLS, FENCES, PATIO COVERS AND OTHER FREESTANDING STRUCTURES REQUIRE SEPARATE REVIEWS AND PERMITS
5. LANDSCAPE AND IRRIGATION WATER USE SHALL HAVE WEATHER OR SOIL BASED CONTROLLERS
6. ADU WILL BE CONNECTED TO THE PUBLIC SEWER SYSTEM OR WILL PROVIDE A COMPLYING SEPTIC SYSTEM.
7. CAL-OSHA PERMIT IS REQUIRED FOR EXCAVATIONS DEEPER THAN 5' AND SHORING AND UNDERPINNING.
8. A DIMENSIONED SITE PLAN DRAWN TO SCALE SHALL BE PROVIDED SHOWING THE FOLLOWING: NORTH ARROW, PROPERTY LINES, EASEMENTS, STREETS, EXISTING AND PROPOSED BUILDINGS, AND STRUCTURES, LOCATION OF YARDS USED FOR ALLOWABLE INCREASE OF BUILDING AREA, DIMENSIONED SETBACKS, MINIMUM SEPARATION FROM EXISTING STRUCTURES AND FUEL MODIFICATION ZONES PER UNIFORM ADMINISTRATIVE CODE SECTION 302.
9. IF A GRADING PLAN IS REQUIRED, INCORPORATE THE ENTIRE APPROVED GRADING PLAN/IMPROVEMENT PLAN (ALL SHEETS) WITH THE BUILDING PLANS.
10. PROJECTIONS, INCLUDING EAVES, MUST BE AT LEAST 24" FROM PROPERTY LINES.

GREEN BUILDING CODE NOTES

1. SITE SHALL BE PLANNED AND DEVELOPED TO KEEP SURFACE WATER AWAY FROM BUILDINGS. PLANS SHALL BE PROVIDED AND APPROVED BY THE CITY ENGINEER THAT SHOW SITE GRADING AND PROVIDE FOR STORM WATER RETENTION AND DRAINAGE DURING CONSTRUCTION. BMP'S THAT ARE CURRENTLY ENFORCED BY THE CITY ENGINEER MUST BE IMPLEMENTED PRIOR TO INITIAL INSPECTION BY THE BUILDING DEPT.
2. 65 % OF CONSTRUCTION WASTE IS TO BE RECYCLED.
3. VOC'S MUST COMPLY WITH THE LIMITATION LISTED IN SECTION 4.504.3 AND TABLES 4.504.1, 4.504.2, 4.504.3, AND 4.504.4 FOR: ADHESIVES, PAINTS AND COATINGS, CARPET AND COMPOSITION WOOD PRODUCTS.
4. INTERIOR MOISTURE CONTROL AT SLAB ON GRADE FLOORS SHALL BE PROVIDED BY THE SOIL ENGINEER. IF A SOIL ENGINEER HAS NOT PREPARED A SOIL REPORT FOR THIS PROJECT, THE FOLLOWING IS REQUIRED: A 4" THICK BASE OF 1/2" OR LARGER CLEAN AGGREGATE SHALL BE PROVIDED WITH A VAPOR BARRIER IN DIRECT CONTACT WITH CONCRETE, WITH A CONCRETE MIX DESIGN WHICH WILL ADDRESS BLEEDING, SHRINKAGE AND CURLING SHALL BE USED.
5. MOISTURE CONTENT OF WOOD SHALL NOT EXCEED 19% BEFORE IT IS ENCLOSED IN CONSTRUCTION. THE MOISTURE CONTENT NEEDS TO BE CERTIFIED BY ONE OF 3 METHODS SPECIFIED. BUILDING MATERIAL WITH VISIBLE SIGNS OF WATER DAMAGE SHOULD NOT BE USED IN CONSTRUCTION. THE MOISTURE CONTENT MUST BE DETERMINED BY THE CONTRACTOR BY ONE OF THE LISTED METHODS LISTED IN CGC SECTION 4.503.3
6. PRIOR TO FINAL APPROVAL OF THE BUILDING THE LICENSED CONTRACTOR, ARCHITECT OR ENGINEER IN RESPONSIBLE CHARGE OF THE OVERALL CONSTRUCTION MUST COMPLETE AND SIGN THE GREEN BUILDING STANDARDS CERTIFICATION FORM AND GIVEN TO THE BUILDING DEPT OFFICIAL TO BE FILED WITH THE APPROVED PLANS
7. LANDSCAPE IRRIGATION WATER USE SHALL HAVE WEATHER BASED CONTROLLERS.
8. PROJECTS WHICH DISTURB LESS THAN ONE ACRE OF SOIL SHALL MANAGE STORM WATER DRAINAGE DURING CONSTRUCTION BY ONE OF THE FOLLOWING: A. RETENTION BASIN. B. WHERE STORM WATER IS CONVEYED TO A PUBLIC DRAINAGE SYSTEM, WATER SHALL BE FILTERED BY USE OF A BARRIER SYSTEM, WATTLE OR OTHER APPROVED METHOD. CGC 4.106.2.
9. THE CONTRACTOR SHALL SUBMIT A CONSTRUCTION WASTE MANAGEMENT PLAN TO THE JURISDICTION AGENCY THAT REGULATES WASTE MANAGEMENT, PER CGC 4.408.2.
10. THE BUILDER IS TO PROVIDE AN OPERATION MANUAL (CONTAINING INFORMATION FORM MAINTAINING APPLIANCES, ETC.) FOR THE OWNER AT THE TIME OF FINAL INSPECTION. CGC 4.410.0
11. DURING CONSTRUCTION, ENDS OF DUCT OPENINGS ARE TO BE SEALED, AND MECHANICAL EQUIPMENT IS TO BE COVERED. CGC 4.504.1
12. BATHROOM FANS SHALL BE ENERGY STAR RATED, VENTED DIRECTLY TO THE OUTSIDE AND CONTROLLED BY A HUMIDISTAT.

DIVISION 2 - SITEWORK

1. SITE PREPARATION
PROJECT IS TO BE STAKED OUT FOR OWNER APPROVAL BEFORE FOR EARTHWORKIS TO BEGIN.

2. SITE CLEARING
CONTRACTOR WILL VERIFY WITH OWNER ALL PLANTING TO BE REMOVED PRIOR TO STARTING WORK.

3. LINES AND LEVELS
THE CONTRACTOR WILL VISIT THE SITE AND EVALUATE GRADE CONDITION. FOR BIDDING PURPOSES, THE CONTRACTOR WILL CALCULATE HIS OWN CUT AND FILL QUANTITIES BASED ON THE SITE PLAN.

4. SHORING IS TO BE PROVIDE AS REQUIRED

5. EARTH WORK
a. REMOVE AND RECOMPACT LOOSE TOPSOIL AND SLIGHTLY ALTER THE EXISTING TOPOGRAPHY. ALL GRADING SHOULD BE PERFORMED IN ACCORDANCE WITH THE CITY OF ENCINITAS GRADING ORDINANCE
b. THE CONTRACTOR IS TO VERIFY THE LOCATION OF UTILITY SERVICE IN THE AREA PRIOR TO EXCAVATION.
c. UNLESS OTHERWISE INDICATED ON THE DRAWINGS, ALL FINISH GRADES ARE TO SLOPE AWAY FROM THE BUILDING AND EXTERIOR PAVING 1/4" PER FOOT MINIMUM FOR A MINIMUM DISTANCE OF 5'-0". LOT DRAINAGE TO AVOID POOLING AT BUILDING.

DESIGN PATH STUDIO
architecture + engineering + planning
DESIGNPATHSTUDIO.COM

BY USING THESE PERMIT READY CONSTRUCTION DOCUMENTS, THE RECIPIENT ACKNOWLEDGES, ACCEPTS AND VOLUNTARILY AFFIRMS THE FOLLOWING CONDITIONS:
1. THE USE OF THIS INFORMATION IS RESTRICTED TO THE ORIGINAL PROJECT FOR WHICH IT WAS PREPARED FOR THE PERMIT READY ACCESSORY DWELLING UNIT (ADU) PROGRAM FOR THE CITY OF PERRIS ONLY. THIS IS A LIMITED SET OF STANDARDIZED ADU PLANS AND SPECIFICATIONS APPROVED BY THE CITY OF PERRIS BUILDING DEPARTMENT. BUILDING CODES DO CHANGE OVER TIME AND RECIPIENT SHALL ENSURE FULL COMPLIANCE UNDER ALL CODES THEN IN EFFECT AT THE TIME OF THE SUBJECT PERMIT. THIS DOES NOT ELIMINATE OR REDUCE THE RECIPIENT'S RESPONSIBILITY TO VERIFY ANY AND ALL INFORMATION RELEVANT TO THE RECIPIENT'S WORK AND RESPONSIBILITY ON THIS PROJECT. DESIGN PATH STUDIO SHALL NOT BE RESPONSIBLE FOR TRANSLATION ERRORS. DO NOT USE THESE CONSTRUCTION DOCUMENTS IF THE PERMIT HAS EXPIRED OR IS REVOKED AT ALL.
2. THE RECIPIENT RECOGNIZES AND ACKNOWLEDGES THAT THE USE OF THIS INFORMATION WILL BE AT THEIR SOLE RISK AND WITHOUT ANY LIABILITY OR LEGAL EXPOSURE TO DESIGN PATH STUDIO. NO WARRANTIES OF ANY NATURE, WHETHER EXPRESS OR IMPLIED, SHALL ATTACH TO THESE DOCUMENTS AND THE INFORMATION CONTAINED THEREON. ANY USE, REUSE, OR ALTERATION OF THESE DOCUMENTS BY THE RECIPIENT OR BY OTHERS WILL BE AT THE RECIPIENT'S RISK AND FULL LEGAL RESPONSIBILITY. FURTHERMORE, THE RECIPIENT WILL, TO THE FULLEST EXTENT PERMITTED BY LAW, DEFEND, INDEMNIFY AND HOLD DESIGN PATH STUDIO AND ITS ARCHITECTS HARMLESS FROM ANY AND ALL CLAIMS, SUITS, LIABILITY, DEMANDS, JUDGMENTS, OR COSTS ARISING OUT OF OR RESULTING THERE FROM ANY USE OF THESE CONSTRUCTION DOCUMENTS FOR OR ON ACCOUNT OF ANY INJURY, DEATH, DAMAGE OR LOSS TO PERSONS OR PROPERTY, DIRECT OR CONSEQUENTIAL DAMAGES IN ANY AMOUNT. THIS INDEMNITY DOES NOT APPLY TO THE SOLE NEGLIGENCE OR WILLFUL MISCONDUCT OF DESIGN PATH STUDIO OR ITS ARCHITECTS.
3. THE DESIGNS REPRESENTED BY THESE PLANS ARE COPYRIGHTED AND ARE SUBJECT TO COPYRIGHT PROTECTION.
4. IF THE RECIPIENT DOES NOT AGREE WITH THE ABOVE CONDITIONS, DO NOT PROCEED WITH CONSTRUCTION OF AN ADU OR OTHER IMPROVEMENT UNDER THESE PLANS AT ALL.

FOR USE IN THE CITY OF PERRIS

project
City of Perris Pre-Approved ADU Program

revisions
01

description
Site Information

date	4 April 2025
project no.	PERRIS PRADU
drawn by	DESIGN PATH STUDIO
sheet no.	AS.1

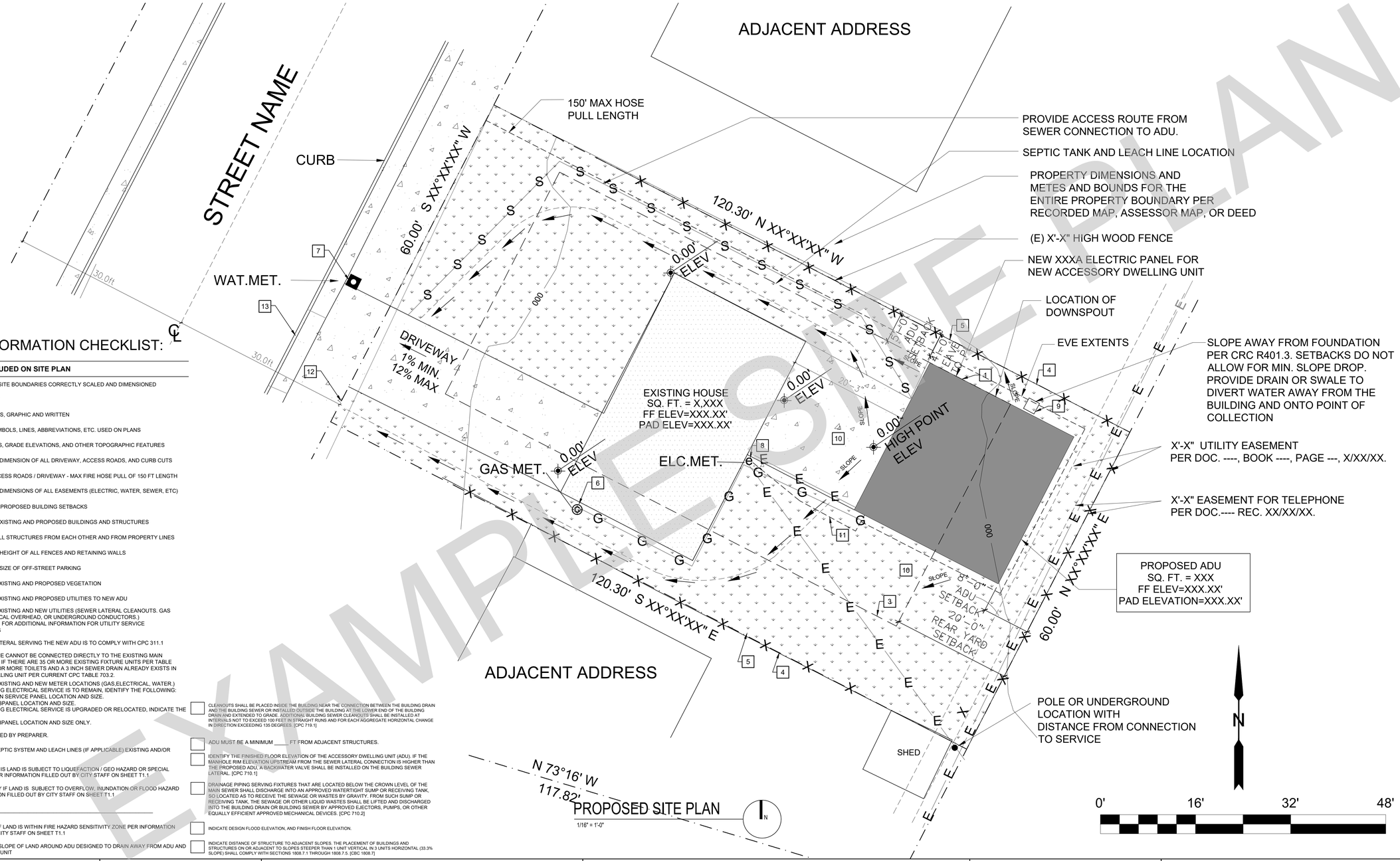

PROPOSED SITE PLAN

1/16" = 1'-0"

EXAMPLE SITE PLAN

SITE INFORMATION CHECKLIST:

X	TO BE INCLUDED ON SITE PLAN
	ALL EXTERIOR SITE BOUNDARIES CORRECTLY SCALED AND DIMENSIONED
	NORTH ARROW
	SCALE OF PLANS, GRAPHIC AND WRITTEN
	LEGEND OF SYMBOLS, LINES, ABBREVIATIONS, ETC. USED ON PLANS
	SITE CONTOURS, GRADE ELEVATIONS, AND OTHER TOPOGRAPHIC FEATURES
	LOCATION AND DIMENSION OF ALL DRIVEWAY, ACCESS ROADS, AND CURB CUTS
	SHOW FIRE ACCESS ROADS / DRIVEWAY - MAX FIRE HOSE PULL OF 150 FT LENGTH
	LOCATION AND DIMENSIONS OF ALL EASEMENTS (ELECTRIC, WATER, SEWER, ETC)
	REQUIRED AND PROPOSED BUILDING SETBACKS
	LOCATION OF EXISTING AND PROPOSED BUILDINGS AND STRUCTURES
	DISTANCE OF ALL STRUCTURES FROM EACH OTHER AND FROM PROPERTY LINES
	LOCATION AND HEIGHT OF ALL FENCES AND RETAINING WALLS
	LOCATION AND SIZE OF OFF-STREET PARKING
	LOCATION OF EXISTING AND PROPOSED VEGETATION
	LOCATION OF EXISTING AND PROPOSED UTILITIES TO NEW ADU
	LOCATION OF EXISTING AND NEW UTILITIES (SEWER LATERAL CLEANOUTS. GAS LINES, ELECTRICAL OVERHEAD, OR UNDERGROUND CONDUCTORS.) SEE SHEET T1.1 FOR ADDITIONAL INFORMATION FOR UTILITY SERVICE REQUIREMENTS
	NEW SEWER LATERAL SERVING THE NEW ADU IS TO COMPLY WITH CPC 311.1
	ADU SEWER LINE CANNOT BE CONNECTED DIRECTLY TO THE EXISTING MAIN DWELLING UNIT IF THERE ARE 35 OR MORE EXISTING FIXTURE UNITS PER TABLE 702.1, OR FIVE OR MORE TOILETS AND A 3 INCH SEWER DRAIN ALREADY EXISTS IN THE MAIN DWELLING UNIT PER CURRENT CPC TABLE 703.2.
	LOCATION OF EXISTING AND NEW METER LOCATIONS (GAS,ELECTRICAL, WATER.) WHERE EXISTING ELECTRICAL SERVICE IS TO REMAIN, IDENTIFY THE FOLLOWING: 1. EXISTING MAIN SERVICE PANEL LOCATION AND SIZE. 2. NEW ADU SUBPANEL LOCATION AND SIZE. WHERE EXISTING ELECTRICAL SERVICE IS UPGRADED OR RELOCATED, INDICATE THE FOLLOWING: 1. NEW ADU SUBPANEL LOCATION AND SIZE ONLY.
	SITE PLAN SIGNED BY PREPARER.
	LOCATION OF SEPTIC SYSTEM AND LEACH LINES (IF APPLICABLE) EXISTING AND/OR PROPOSED
	SOILS: IDENTIFY IS LAND IS SUBJECT TO LIQUEFACTION / GEO HAZARD OR SPECIAL STUDY ZONE PER INFORMATION FILLED OUT BY CITY STAFF ON SHEET T1.1
	FLOOD: IDENTIFY IF LAND IS SUBJECT TO OVERFLOW, INUNDATION OR FLOOD HAZARD PER INFORMATION FILLED OUT BY CITY STAFF ON SHEET T1.1
	FLOOD ZONE_____
	FIRE: IDENTIFY IF LAND IS WITHIN FIRE HAZARD SENSITIVITY ZONE PER INFORMATION FILLED OUT BY CITY STAFF ON SHEET T1.1
	TOPOGRAPHY / SLOPE OF LAND AROUND ADU DESIGNED TO DRAIN AWAY FROM ADU AND MAIN DWELLING UNIT
	CLEANOUTS SHALL BE PLACED INSIDE THE BUILDING NEAR THE CONNECTION BETWEEN THE BUILDING DRAIN AND THE BUILDING SEWER OR INSTALLED OUTSIDE THE BUILDING AT THE LOWER END OF THE BUILDING DRAIN AND EXTENDED TO GRADE. ADDITIONAL BUILDING SEWER CLEANOUTS SHALL BE INSTALLED AT INTERVALS NOT TO EXCEED 100 FEET IN STRAIGHT RUNS AND FOR EACH AGGREGATE HORIZONTAL CHANGE IN DIRECTION EXCEEDING 135 DEGREES. [CPC 719.1]
	ADU MUST BE A MINIMUM _____ FT FROM ADJACENT STRUCTURES.
	IDENTIFY THE FINISHED FLOOR ELEVATION OF THE ACCESSORY DWELLING UNIT (ADU). IF THE MANHOLE RIM ELEVATION UPSTREAM FROM THE SEWER LATERAL CONNECTION IS HIGHER THAN THE PROPOSED ADU, A BACKWATER VALVE SHALL BE INSTALLED ON THE BUILDING SEWER LATERAL. [CPC 710.1]
	DRAINAGE PIPING SERVING FIXTURES THAT ARE LOCATED BELOW THE CROWN LEVEL OF THE MAIN SEWER SHALL DISCHARGE INTO AN APPROVED WATERTIGHT SUMP OR RECEIVING TANK, SO LOCATED AS TO RECEIVE THE SEWAGE OR WASTES BY GRAVITY. FROM SUCH SUMP OR RECEIVING TANK, THE SEWAGE OR OTHER LIQUID WASTES SHALL BE LIFTED AND DISCHARGED INTO THE BUILDING DRAIN OR BUILDING SEWER BY APPROVED EJECTORS, PUMPS, OR OTHER EQUALLY EFFICIENT APPROVED MECHANICAL DEVICES. [CPC 710.2]
	INDICATE DESIGN FLOOD ELEVATION, AND FINISH FLOOR ELEVATION.
	INDICATE DISTANCE OF STRUCTURE TO ADJACENT SLOPES. THE PLACEMENT OF BUILDINGS AND STRUCTURES ON OR ADJACENT TO SLOPES STEEPER THAN 1 UNIT VERTICAL IN 3 UNITS HORIZONTAL (33.3% SLOPE) SHALL COMPLY WITH SECTIONS 1808.7.1 THROUGH 1808.7.5. [CBC 1808.7]

KEYNOTES

1. LINE OF EXTERIOR WALL, TYP.
2. LINE OF ROOF OVERHANG / DECK / AWNING / STRUCTURE ABOVE
3. REQUIRED SETBACKS
4. PROPERTY LINE, TYP.
5. FENCE- HEIGHT PER PLAN
6. EXISTING GAS METER
7. EXISTING WATER METER
8. EXISTING ELECTRIC METER.
9. CONDENSING UNIT
10. SURFACE WATER IS TO DRAIN AWAY FROM BUILDING. GRADE SHALL FALL A MIN. OF 6" WITHIN THE FIRST 10 FEET
11. FEEDER TO EXTEND TO EXISTING PANEL
12. NEW ADU SUB PANEL / DISCONNECT / JUNCTION BOX AND GROUNDING ELECTRODE SYSTEM PER NEC ARTICLE 250.32

GENERAL NOTES

1. SPOT DIMENSIONS INDICATE ESTIMATED GRADE HEIGHTS. VERIFY IN FIELD PRIOR TO CONSTRUCTION.
2. SEE BUILDING PLANS FOR ALL OTHER DIMENSIONS AND NOTES NOT SHOWN.
3. SEE BUILDING PLANS AND SCHEDULES FOR ALL EXTERIOR DOOR AND WINDOW REFERENCES AND LOCATIONS.
4. YARD SETBACKS ARE TO BE MEASURED FROM THE EXTERIOR WALL FINISH TO THE PROPERTY LINE AND NOT FROM THE OUTSIDE OF THE FOOTING (OR FACE OF STUDS).
5. SEWER DRAIN CLEANOUTS REQUIRED AT 100 FOOT INTERVALS AND CHANGES IN DIRECTION OF 135 DEGREES OR MORE.
6. LOAD-BEARING CAPACITY OF 1,500 PSF IS ASSIGNED FOR FOUNDATION WHERE THE FOUNDATION IS EMBEDDED IN NON-EXPANISVE NATURAL GROUND. WHERE EXPANISVE SOILS ARE FOUND IN THE BUILDING AREA, A GEOTECHNICAL REPORT PREPARED BY A CALIFORNIA REGISTERED DESIGN PROFESSIONAL MAY BE REQUIRED.

LEGEND

- 0.00' — SPOT GRADE ELEVATION
- AREA OF NEW BUILDING FOOTPRINT
- AREA OF EXISTING BUILDING FOOTPRINT
- CONCRETE PAVING
- LANDSCAPE
- 1 — KEYNOTE
- PROPERTY LINE
- REQUIRED SETBACKS
- DRAINAGE PATTERN
- 000 — SITE CONTOURS
- S — NEW SEWER LINE
- W — NEW DOMESTIC WATER LINE
- E — NEW ELECTRICAL & TEL DATA LINE
- G — NEW GAS LINE
- X — NEW OR EXISTING FENCE TO COMPLY WITH ZONING CODE SECTION 37-50.090

CERTIFICATE OF ACCURACY

I CERTIFY ALL DOCUMENTS AND PLANS CLEARLY AND ACCURATELY SHOW ALL EXISTING AND ALL PROPOSED BUILDINGS, STRUCTURES, ACCESS ROADS, AND UTILITIES/UTILITY EASEMENTS. ALL PROPOSED LAND USE ACTIVITIES, IMPROVEMENTS TO LAND, AND/OR BUILDING MODIFICATIONS OR ADDITIONS ARE CLEARLY LABELED ON THE SITE PLAN OF THE APPROVED PLAN SET. I UNDERSTAND THAT ANY POTENTIALLY EXISTING DETAIL WITHIN THESE PLANS INCONSISTENT WITH THE SITE PLAN ARE NOT APPROVED AND MAY BE REQUIRED TO BE ALTERED OR REMOVED. THE SUBMITTED DOCUMENTS AND PLANS SHOW THE CORRECT DIMENSIONS OF THE PROPERTY, THE BUILDINGS, AND STRUCTURES AND THEIR SETBACKS FROM PROPERTY LINES AND FROM ONE ANOTHER, ACCESS ROADS/EASEMENTS, AND UTILITIES. THE EXISTING AND PROPOSED USE OF LAND AND OF EACH BUILDING AS STATED IS TRUE AND CORRECT. FURTHER, ALL IMPROVEMENTS EXISTING ON THE PROPERTY WERE COMPLETED IN ACCORDANCE WITH ALL REGULATIONS IN EXISTENCE AT THE TIME OF THEIR CONSTRUCTION, UNLESS OTHERWISE NOTED. ALL EASEMENTS AND OTHER ENCUMBRANCES TO DEVELOPMENT HAVE BEEN ACCURATELY SHOWN AND LABELED AS WELL AS ALL ON-SITE GRADING/SITE PREPARATION.

THE UNDERSIGNED UNDERSTANDS WHERE EXPANSIVE SOILS ARE FOUND IN THE BUILDING AREA, A GEOTECHNICAL REPORT PREPARED BY A CALIFORNIA REGISTERED DESIGN PROFESSIONAL MAY BE REQUIRED.

APPLICANT (SIGNATURE): _____ DATE: _____

SITE PLAN PREPARED BY (SIGNATURE) _____ DATE: _____

UTILITIES PROVIDERS:

- GAS:
- ELECTRIC:
- WATER:

SCHOOL DISTRICTS:

HIGH SCHOOL -

ELEMENTARY SCHOOL -

GRADING INFORMATION:

TOTAL CUBIC YARD OF EARTHWORK = _____

TOTAL FILL MATERIAL PLACED ON AN EXISTING SLOPE STEEPER THAN FIVE UNITS HORIZONTAL TO ONE VERTICAL = _____

TOTAL CUT OR FILL MATERIAL EXCEEDING FOUR FEET IN VERTICAL DEPTH, MEASURED FROM THE EXISTING GROUND SURFACE = _____

DESIGN PATH STUDIO
architecture + engineering + planning
DESIGNPATHSTUDIO.COM

BY USING THESE PERMIT READY CONSTRUCTION DOCUMENTS, THE RECIPIENT ACKNOWLEDGES, ACCEPTS AND VOLUNTARILY AFFIRMS THE FOLLOWING CONDITIONS:
1. THE USE OF THIS INFORMATION IS RESTRICTED TO THE ORIGINAL PROJECT FOR WHICH IT WAS PREPARED FOR THE PERMIT READY ACCESSORY DWELLING UNIT (ADU) PROGRAM FOR THE CITY OF PERRIS ONLY. THIS IS A LIMITED SET OF STANDARDIZED ADU PLANS AND SPECIFICATIONS APPROVED BY THE CITY OF PERRIS BUILDING DEPARTMENT. BUILDING CODES DO CHANGE OVER TIME AND RECIPIENT SHALL ENSURE FULL COMPLIANCE UNDER ALL CODES THEN IN EFFECT AT THE TIME OF THE SUBJECT PERMIT. THIS DOES NOT ELIMINATE OR REDUCE THE RECIPIENT'S RESPONSIBILITY TO VERIFY ANY AND ALL INFORMATION RELEVANT TO THE RECIPIENT'S WORK AND RESPONSIBILITY ON THIS PROJECT. DESIGN PATH STUDIO SHALL NOT BE RESPONSIBLE FOR TRANSLATION ERRORS. DO NOT USE THESE CONSTRUCTION DOCUMENTS IF THE PERMIT HAS EXPIRED OR IS REVOKED AT ALL.
2. THE RECIPIENT RECOGNIZES AND ACKNOWLEDGES THAT THE USE OF THIS INFORMATION WILL BE AT THEIR SOLE RISK AND WITHOUT ANY LIABILITY OR LEGAL EXPOSURE TO DESIGN PATH STUDIO. NO WARRANTIES OF ANY NATURE, WHETHER EXPRESS OR IMPLIED, SHALL ATTACH TO THESE DOCUMENTS AND THE INFORMATION CONTAINED THEREON. ANY USE, REUSE, OR ALTERATION OF THESE DOCUMENTS BY THE RECIPIENT OR BY OTHERS WILL BE AT THE RECIPIENT'S RISK AND FULL LEGAL RESPONSIBILITY. FURTHERMORE, THE RECIPIENT WILL, TO THE FULLEST EXTENT PERMITTED BY LAW, DEFEND, INDEMNIFY AND HOLD DESIGN PATH STUDIO AND ITS ARCHITECTS HARMLESS FROM ANY AND ALL CLAIMS, SUITS, LIABILITY, DEMANDS, JUDGMENTS, OR COSTS ARISING OUT OF OR RESULTING THERE FROM ANY USE OF THESE CONSTRUCTION DOCUMENTS FOR OR ON ACCOUNT OF ANY INJURY, DEATH, DAMAGE OR LOSS TO PERSONS OR PROPERTY, DIRECT OR CONSEQUENTIAL DAMAGES IN ANY AMOUNT. THIS INDEMNITY DOES NOT APPLY TO THE SOLE NEGLIGENCE OR WILLFUL MISCONDUCT OF DESIGN PATH STUDIO OR ITS ARCHITECTS.
3. THE DESIGNS REPRESENTED BY THESE PLANS ARE COPYRIGHTED AND ARE SUBJECT TO COPYRIGHT PROTECTION.
4. IF THE RECIPIENT DOES NOT AGREE WITH THE ABOVE CONDITIONS, DO NOT PROCEED WITH CONSTRUCTION OF AN ADU OR OTHER IMPROVEMENT UNDER THESE PLANS AT ALL.

project

City of Perris Pre-Approved ADU Program

revisions

0

description

Example Site Plan

date	4 April 2025
project no.	PERRIS PRADU
drawn by	DESIGN PATH STUDIO
sheet no.	AS.2

SITE INFORMATION CHECKLIST:

X	TO BE INCLUDED ON SITE PLAN
	ALL EXTERIOR SITE BOUNDARIES CORRECTLY SCALED AND DIMENSIONED
	NORTH ARROW
	SCALE OF PLANS, GRAPHIC AND WRITTEN
	LEGEND OF SYMBOLS, LINES, ABBREVIATIONS, ETC. USED ON PLANS
	SITE CONTOURS, GRADE ELEVATIONS, AND OTHER TOPOGRAPHIC FEATURES
	LOCATION AND DIMENSION OF ALL DRIVEWAY, ACCESS ROADS, AND CURB CUTS
	SHOW FIRE ACCESS ROADS / DRIVEWAY - MAX FIRE HOSE PULL OF 150 FT LENGTH
	LOCATION AND DIMENSIONS OF ALL EASEMENTS (ELECTRIC, WATER, SEWER, ETC)
	REQUIRED AND PROPOSED BUILDING SETBACKS
	LOCATION OF EXISTING AND PROPOSED BUILDINGS AND STRUCTURES
	DISTANCE OF ALL STRUCTURES FROM EACH OTHER AND FROM PROPERTY LINES
	LOCATION AND HEIGHT OF ALL FENCES AND RETAINING WALLS
	LOCATION AND SIZE OF OFF-STREET PARKING
	LOCATION OF EXISTING AND PROPOSED VEGETATION
	LOCATION OF EXISTING AND PROPOSED UTILITIES TO NEW ADU
	LOCATION OF EXISTING AND NEW UTILITIES (SEWER LATERAL CLEANOUTS. GAS LINES, ELECTRICAL OVERHEAD, OR UNDERGROUND CONDUCTORS.) SEE SHEET T1.1 FOR ADDITIONAL INFORMATION FOR UTILITY SERVICE REQUIREMENTS
	NEW SEWER LATERAL SERVING THE NEW ADU IS TO COMPLY WITH CPC 311.1
	ADU SEWER LINE CANNOT BE CONNECTED DIRECTLY TO THE EXISTING MAIN DWELLING UNIT IF THERE ARE 35 OR MORE EXISTING FIXTURE UNITS PER TABLE 702.1, OR FIVE OR MORE TOILETS AND A 3 INCH SEWER DRAIN ALREADY EXISTS IN THE MAIN DWELLING UNIT PER CURRENT CPC TABLE 703.2.
	LOCATION OF EXISTING AND NEW METER LOCATIONS (GAS,ELECTRICAL, WATER.) WHERE EXISTING ELECTRICAL SERVICE IS TO REMAIN, IDENTIFY THE FOLLOWING: 1. EXISTING MAIN SERVICE PANEL LOCATION AND SIZE. 2. NEW ADU SUBPANEL LOCATION AND SIZE. WHERE EXISTING ELECTRICAL SERVICE IS UPGRADED OR RELOCATED, INDICATE THE FOLLOWING: 1. NEW ADU SUBPANEL LOCATION AND SIZE ONLY.
	SITE PLAN SIGNED BY PREPARER.
	LOCATION OF SEPTIC SYSTEM AND LEACH LINES (IF APPLICABLE) EXISTING AND/OR PROPOSED
	SOILS: IDENTIFY IS LAND IS SUBJECT TO LIQUEFACTION / GEO HAZARD OR SPECIAL STUDY ZONE PER INFORMATION FILLED OUT BY CITY STAFF ON SHEET T1.1
	FLOOD: IDENTIFY IF LAND IS SUBJECT TO OVERFLOW, INUNDATION OR FLOOD HAZARD PER INFORMATION FILLED OUT BY CITY STAFF ON SHEET T1.1
	FLOOD ZONE_____
	FIRE: IDENTIFY IF LAND IS WITHIN FIRE HAZARD SENSITIVITY ZONE PER INFORMATION FILLED OUT BY CITY STAFF ON SHEET T1.1
	TOPOGRAPHY / SLOPE OF LAND AROUND ADU DESIGNED TO DRAIN AWAY FROM ADU AND MAIN DWELLING UNIT
	CLEANOUTS SHALL BE PLACED INSIDE THE BUILDING NEAR THE CONNECTION BETWEEN THE BUILDING DRAIN AND THE BUILDING SEWER OR INSTALLED OUTSIDE THE BUILDING AT THE LOWER END OF THE BUILDING DRAIN AND EXTENDED TO GRADE. ADDITIONAL BUILDING SEWER CLEANOUTS SHALL BE INSTALLED AT INTERVALS NOT TO EXCEED 100 FEET IN STRAIGHT RUNS AND FOR EACH AGGREGATE HORIZONTAL CHANGE IN DIRECTION EXCEEDING 135 DEGREES. [CPC 719.1]
	ADU MUST BE A MINIMUM _____ FT FROM ADJACENT STRUCTURES.
	IDENTIFY THE FINISHED FLOOR ELEVATION OF THE ACCESSORY DWELLING UNIT (ADU). IF THE MANHOLE RIM ELEVATION UPSTREAM FROM THE SEWER LATERAL CONNECTION IS HIGHER THAN THE PROPOSED ADU, A BACKWATER VALVE SHALL BE INSTALLED ON THE BUILDING SEWER LATERAL. [CPC 710.1]
	DRAINAGE PIPING SERVING FIXTURES THAT ARE LOCATED BELOW THE CROWN LEVEL OF THE MAIN SEWER SHALL DISCHARGE INTO AN APPROVED WATERTIGHT SUMP OR RECEIVING TANK, SO LOCATED AS TO RECEIVE THE SEWAGE OR WASTES BY GRAVITY. FROM SUCH SUMP OR RECEIVING TANK, THE SEWAGE OR OTHER LIQUID WASTES SHALL BE LIFTED AND DISCHARGED INTO THE BUILDING DRAIN OR BUILDING SEWER BY APPROVED EJECTORS, PUMPS, OR OTHER EQUALLY EFFICIENT APPROVED MECHANICAL DEVICES. [CPC 710.2]
	INDICATE DESIGN FLOOD ELEVATION, AND FINISH FLOOR ELEVATION.
	INDICATE DISTANCE OF STRUCTURE TO ADJACENT SLOPES. THE PLACEMENT OF BUILDINGS AND STRUCTURES ON OR ADJACENT TO SLOPES STEEPER THAN 1 UNIT VERTICAL IN 3 UNITS HORIZONTAL (33.3% SLOPE) SHALL COMPLY WITH SECTIONS 1808.7.1 THROUGH 1808.7.5. [CBC 1808.7]

PROPOSED SITE PLAN

1/16" = 1'-0"

N

KEYNOTES

1. LINE OF EXTERIOR WALL, TYP.
2. LINE OF ROOF OVERHANG / DECK / AWNING / STRUCTURE ABOVE
3. REQUIRED SETBACKS
4. PROPERTY LINE, TYP.
5. FENCE- HEIGHT PER PLAN
6. EXISTING GAS METER
7. EXISTING WATER METER
8. EXISTING ELECTRIC METER.
9. CONDENSING UNIT
10. SURFACE WATER IS TO DRAIN AWAY FROM BUILDING. GRADE SHALL FALL A MIN. OF 6" WITHIN THE FIRST 10 FEET
11. FEEDER TO EXTEND TO EXISTING PANEL
12. NEW ADU SUB PANEL / DISCONNECT / JUNCTION BOX AND GROUNDING ELECTRODE SYSTEM PER NEC ARTICLE 250.32

GENERAL NOTES

1. SPOT DIMENSIONS INDICATE ESTIMATED GRADE HEIGHTS. VERIFY IN FIELD PRIOR TO CONSTRUCTION.
2. SEE BUILDING PLANS FOR ALL OTHER DIMENSIONS AND NOTES NOT SHOWN.
3. SEE BUILDING PLANS AND SCHEDULES FOR ALL EXTERIOR DOOR AND WINDOW REFERENCES AND LOCATIONS.
4. YARD SETBACKS ARE TO BE MEASURED FROM THE EXTERIOR WALL FINISH TO THE PROPERTY LINE AND NOT FROM THE OUTSIDE OF THE FOOTING (OR FACE OF STUDS).
5. SEWER DRAIN CLEANOUTS REQUIRED AT 100 FOOT INTERVALS AND CHANGES IN DIRECTION OF 135 DEGREES OR MORE.
6. LOAD-BEARING CAPACITY OF 1,500 PSF IS ASSIGNED FOR FOUNDATION WHERE THE FOUNDATION IS EMBEDDED IN NON-EXPANISVE NATURAL GROUND. WHERE EXPANISVE SOILS ARE FOUND IN THE BUILDING AREA, A GEOTECHNICAL REPORT PREPARED BY A CALIFORNIA REGISTERED DESIGN PROFESSIONAL MAY BE REQUIRED.

LEGEND

- 0.00' — SPOT GRADE ELEVATION
- AREA OF NEW BUILDING FOOTPRINT
- AREA OF EXISTING BUILDING FOOTPRINT
- CONCRETE PAVING
- LANDSCAPE
- 1 — KEYNOTE
- PROPERTY LINE
- REQUIRED SETBACKS
- DRAINAGE PATTERN
- 000 — SITE CONTOURS
- S — NEW SEWER LINE
- W — NEW DOMESTIC WATER LINE
- E — NEW ELECTRICAL & TEL DATA LINE
- G — NEW GAS LINE
- X X X — NEW OR EXISTING FENCE TO COMPLY WITH ZONING CODE SECTION 37-50.090

CERTIFICATE OF ACCURACY

I CERTIFY ALL DOCUMENTS AND PLANS CLEARLY AND ACCURATELY SHOW ALL EXISTING AND ALL PROPOSED BUILDINGS, STRUCTURES, ACCESS ROADS, AND UTILITIES/UTILITY EASEMENTS. ALL PROPOSED LAND USE ACTIVITIES, IMPROVEMENTS TO LAND, AND/OR BUILDING MODIFICATIONS OR ADDITIONS ARE CLEARLY LABELED ON THE SITE PLAN OF THE APPROVED PLAN SET. I UNDERSTAND THAT ANY POTENTIALLY EXISTING DETAIL WITHIN THESE PLANS INCONSISTENT WITH THE SITE PLAN ARE NOT APPROVED AND MAY BE REQUIRED TO BE ALTERED OR REMOVED. THE SUBMITTED DOCUMENTS AND PLANS SHOW THE CORRECT DIMENSIONS OF THE PROPERTY, THE BUILDINGS, AND STRUCTURES AND THEIR SETBACKS FROM PROPERTY LINES AND FROM ONE ANOTHER, ACCESS ROADS/EASEMENTS, AND UTILITIES. THE EXISTING AND PROPOSED USE OF LAND AND OF EACH BUILDING AS STATED IS TRUE AND CORRECT. FURTHER, ALL IMPROVEMENTS EXISTING ON THE PROPERTY WERE COMPLETED IN ACCORDANCE WITH ALL REGULATIONS IN EXISTENCE AT THE TIME OF THEIR CONSTRUCTION, UNLESS OTHERWISE NOTED. ALL EASEMENTS AND OTHER ENCUMBRANCES TO DEVELOPMENT HAVE BEEN ACCURATELY SHOWN AND LABELED AS WELL AS ALL ON-SITE GRADING/SITE PREPARATION.

THE UNDERSIGNED UNDERSTANDS WHERE EXPANSIVE SOILS ARE FOUND IN THE BUILDING AREA, A GEOTECHNICAL REPORT PREPARED BY A CALIFORNIA REGISTERED DESIGN PROFESSIONAL MAY BE REQUIRED.

APPLICANT (SIGNATURE): _____ DATE: _____

SITE PLAN PREPARED BY (SIGNATURE) _____ DATE: _____

UTILITIES PROVIDERS:

- GAS:
- ELECTRIC:
- WATER:

SCHOOL DISTRICTS:

HIGH SCHOOL -

ELEMENTARY SCHOOL -

GRADING INFORMATION:

TOTAL CUBIC YARD OF EARTHWORK = _____

TOTAL FILL MATERIAL PLACED ON AN EXISTING SLOPE STEEPER THAN FIVE UNITS HORIZONTAL TO ONE VERTICAL = _____

TOTAL CUT OR FILL MATERIAL EXCEEDING FOUR FEET IN VERTICAL DEPTH, MEASURED FROM THE EXISTING GROUND SURFACE = _____

DESIGN PATH STUDIO
architecture + engineering + planning
DESIGNPATHSTUDIO.COM

BY USING THESE PERMIT READY CONSTRUCTION DOCUMENTS, THE RECIPIENT ACKNOWLEDGES, ACCEPTS AND VOLUNTARILY AFFIRMS THE FOLLOWING CONDITIONS:
1. THE USE OF THIS INFORMATION IS RESTRICTED TO THE ORIGINAL PROJECT FOR WHICH IT WAS PREPARED FOR THE PERMIT READY ACCESSORY DWELLING UNIT (ADU) PROGRAM FOR THE CITY OF PERRIS ONLY. THIS IS A LIMITED SET OF STANDARDIZED ADU PLANS AND SPECIFICATIONS APPROVED BY THE CITY OF PERRIS BUILDING DEPARTMENT. BUILDING CODES DO CHANGE OVER TIME AND RECIPIENT SHALL ENSURE FULL COMPLIANCE UNDER ALL CODES THEN IN EFFECT AT THE TIME OF THE SUBJECT PERMIT. THIS DOES NOT ELIMINATE OR REDUCE THE RECIPIENT'S RESPONSIBILITY TO VERIFY ANY AND ALL INFORMATION RELEVANT TO THE RECIPIENT'S WORK AND RESPONSIBILITY ON THIS PROJECT. DESIGN PATH STUDIO SHALL NOT BE RESPONSIBLE FOR TRANSLATION ERRORS. DO NOT USE THESE CONSTRUCTION DOCUMENTS IF THE PERMIT HAS EXPIRED OR IS REVOKED AT ALL.
2. THE RECIPIENT RECOGNIZES AND ACKNOWLEDGES THAT THE USE OF THIS INFORMATION WILL BE AT THEIR SOLE RISK AND WITHOUT ANY LIABILITY OR LEGAL EXPOSURE TO DESIGN PATH STUDIO. NO WARRANTIES OF ANY NATURE, WHETHER EXPRESS OR IMPLIED, SHALL ATTACH TO THESE DOCUMENTS AND THE INFORMATION CONTAINED THEREON. ANY USE, REUSE, OR ALTERATION OF THESE DOCUMENTS BY THE RECIPIENT OR BY OTHERS WILL BE AT THE RECIPIENT'S RISK AND FULL LEGAL RESPONSIBILITY. FURTHERMORE, THE RECIPIENT WILL, TO THE FULLEST EXTENT PERMITTED BY LAW, DEFEND, INDEMNIFY AND HOLD DESIGN PATH STUDIO AND ITS ARCHITECTS HARMLESS FROM ANY AND ALL CLAIMS, SUITS, LIABILITY, DEMANDS, JUDGMENTS, OR COSTS ARISING OUT OF OR RESULTING THERE FROM ANY USE OF THESE CONSTRUCTION DOCUMENTS FOR OR ON ACCOUNT OF ANY INJURY, DEATH, DAMAGE OR LOSS TO PERSONS OR PROPERTY, DIRECT OR CONSEQUENTIAL DAMAGES IN ANY AMOUNT. THIS INDEMNITY DOES NOT APPLY TO THE SOLE NEGLIGENCE OR WILLFUL MISCONDUCT OF DESIGN PATH STUDIO OR ITS ARCHITECTS.
3. THE DESIGNS REPRESENTED BY THESE PLANS ARE COPYRIGHTED AND ARE SUBJECT TO COPYRIGHT PROTECTION.
4. IF THE RECIPIENT DOES NOT AGREE WITH THE ABOVE CONDITIONS, DO NOT PROCEED WITH CONSTRUCTION OF AN ADU OR OTHER IMPROVEMENT UNDER THESE PLANS AT ALL.

project

City of Perris
Pre-Approved
ADU Program

revisions

1

description

Proposed
Site Plan

date	4 April 2025
project no.	PERRIS PRADU
drawn by	DESIGN PATH STUDIO
sheet no.	AS.3

2022 CALIFORNIA GREEN BUILDING STANDARDS CODE
RESIDENTIAL MANDATORY MEASURES, SHEET 1 (July 2024 Supplement)

Y = YES
N/A = NOT APPLICABLE
RESPON. PARTY = RESPONSIBLE PARTY (ie: ARCHITECT, ENGINEER, OWNER, CONTRACTOR, INSPECTOR ETC.)

Y | N/A | RESPON. PARTY

CHAPTER 3
GREEN BUILDING
SECTION 301 GENERAL

301.1 SCOPE. Buildings shall be designed to include the green building measures specified as mandatory in the application checklists contained in this code. Voluntary green building measures are also included in the application checklists and may be included in the design and construction of structures covered by this code, but are not required unless adopted by a city, county, or city and county as specified in Section 101.7.

301.1.1 Additions and alterations. [HCD] The mandatory provisions of Chapter 4 shall be applied to additions or alterations of existing residential buildings where the addition or alteration increases the building's conditioned area, volume, or size. The requirements shall apply only to and/or within the specific area of the addition or alteration.

The mandatory provision of Section 4.106.4.2 may apply to additions or alterations of existing parking facilities or the addition of new parking facilities serving existing multifamily buildings. See Section 4.106.4.3 for application.

Note: Repairs including, but not limited to, resurfacing, restriping and repairing or maintaining existing lighting fixtures are not considered alterations for the purpose of this section.

Note: On and after January 1, 2014, residential buildings undergoing permitted alterations, additions, or improvements shall replace noncompliant plumbing fixtures with water-conserving plumbing fixtures. Plumbing fixture replacement is required prior to issuance of a certificate of final completion, certificate of occupancy or final permit approval by the local building department. See Civil Code Section 1101.1, et seq., for the definition of a noncompliant plumbing fixture, types of residential buildings affected and other important enactment dates.

301.2 LOW-RISE AND HIGH-RISE RESIDENTIAL BUILDINGS. [HCD] The provisions of individual sections of CALGreen may apply to either low-rise residential buildings high-rise residential buildings, or both. Individual sections will be designated by banners to indicate where the section applies specifically to low-rise only (LR) or high-rise only (HR). When the section applies to both low-rise and high-rise buildings, no banner will be used.

SECTION 302 MIXED OCCUPANCY BUILDINGS

302.1 MIXED OCCUPANCY BUILDINGS. In mixed occupancy buildings, each portion of a building shall comply with the specific green building measures applicable to each specific occupancy.
Exceptions:
1. [HCD] Accessory structures and accessory occupancies serving residential buildings shall comply with Chapter 4 and Appendix A4, as applicable.
2. [HCD] For purposes of *CAL*Green, live/work units, complying with Section 419 of the *California Building Code*, shall not be considered mixed occupancies. Live/Work units shall comply with Chapter 4 and Appendix A4, as applicable.

DIVISION 4.1 PLANNING AND DESIGN

ABBREVIATION DEFINITIONS:

HCD	Department of Housing and Community Development
BSC	California Building Standards Commission
DSA-SS	Division of the State Architect, Structural Safety
OSHPD	Office of Statewide Health Planning and Development
LR	Low Rise
HR	High Rise
AA	Additions and Alterations
N	New

CHAPTER 4
RESIDENTIAL MANDATORY MEASURES

SECTION 4.102 DEFINITIONS
4.102.1 DEFINITIONS
The following terms are defined in Chapter 2 *(and are included here for reference)*

FRENCH DRAIN. A trench, hole or other depressed area loosely filled with rock, gravel, fragments of brick or similar pervious material used to collect or channel drainage or runoff water.

WATTLES. Wattles are used to reduce sediment in runoff. Wattles are often constructed of natural plant materials such as hay, straw or similar material shaped in the form of tubes and placed on a downflow slope. Wattles are also used for perimeter and inlet controls.

4.106 SITE DEVELOPMENT
4.106.1 GENERAL. Preservation and use of available natural resources shall be accomplished through evaluation and careful planning to minimize negative effects on the site and adjacent areas. Preservation of slopes, management of storm water drainage and erosion controls shall comply with this section.

4.106.2 STORM WATER DRAINAGE AND RETENTION DURING CONSTRUCTION. Projects which disturb less than one acre of soil and are not part of a larger common plan of development which in total disturbs one acre or more, shall manage storm water drainage during construction. In order to manage storm water drainage during construction, one or more of the following measures shall be implemented to prevent flooding of adjacent property, prevent erosion and retain soil runoff on the site.

1. Retention basins of sufficient size shall be utilized to retain storm water on the site.
2. Where storm water is conveyed to a public drainage system, collection point, gutter or similar disposal method, water shall be filtered by use of a barrier system, wattle or other method approved by the enforcing agency.
3. Compliance with a lawfully enacted storm water management ordinance.

Note: Refer to the State Water Resources Control Board for projects which disturb one acre or more of soil, or are part of a larger common plan of development which in total disturbs one acre or more of soil.

(Website: https://www.waterboards.ca.gov/water_issues/programs/stormwater/construction.html)

4.106.3 GRADING AND PAVING. Construction plans shall indicate how the site grading or drainage system will manage all surface water flows to keep water from entering buildings. Examples of methods to manage surface water include, but are not limited to, the following:

1. Swales
2. Water collection and disposal systems
3. French drains
4. Water retention gardens
5. Other water measures which keep surface water away from buildings and aid in groundwater recharge.

Exception: Additions and alterations not altering the drainage path.

4.106.4 Electric vehicle (EV) charging for new construction. New construction shall comply with Section 4.106.4.1 or 4.106.4.2. Electric vehicle supply equipment (EVSE) shall comply with the *California Electrical Code*.

Exceptions:
1. On a case-by-case basis, where the local enforcing agency has determined EV charging and infrastructure are not feasible based upon one or more of the following conditions:
   1.1 Where there is no local utility power supply or the local utility is unable to supply adequate power.
   1.2 Where there is evidence suitable to the local enforcing agency substantiating that additional local utility infrastructure design requirements, directly related to the implementation of Section 4.106.4, may adversely impact the construction cost of the project.
2. Accessory Dwelling Units (ADU) and Junior Accessory Dwelling Units (JADU) without additional parking facilities.

4.106.4.1 New one- and two-family dwellings and townhouses with attached private garages. For each dwelling unit, install a listed raceway to accommodate a dedicated 208/240-volt branch circuit. The raceway shall not be less than trade size 1 (nominal 1-inch inside diameter). The raceway shall originate at the main service or subpanel and shall terminate into a listed cabinet, box or other enclosure in close proximity to the proposed location of an EV charger. Raceways are required to be continuous at enclosed, inaccessible or concealed areas and spaces. The service panel and/or subpanel shall provide capacity to install a 40-ampere 208/240-volt minimum dedicated branch circuit and space(s) reserved to permit installation of a branch circuit overcurrent protective device.

Exemption: A raceway is not required if a minimum 40-ampere 208/240-volt dedicated EV branch circuit is installed in close proximity to the proposed location of an EV charger at the time of original construction in accordance with the *California Electrical Code*.

4.106.4.1.1 Identification. The service panel or subpanel circuit directory shall identify the overcurrent protective device space(s) reserved for future EV charging as "EV CAPABLE". The raceway termination location shall be permanently and visibly marked as "EV CAPABLE".

4.106.4.2 New multifamily dwellings, hotels and motels and new residential parking facilities.
When parking is provided, parking spaces for new multifamily dwellings, hotels and motels shall meet the requirements of Section 4.106.4.2.2. Calculations for spaces shall be rounded up to the nearest whole number. A parking space served by electric vehicle supply equipment or designed as an EV charging space shall count as at least one standard automobile parking space only for the purpose of complying with any applicable minimum parking space requirements established by a local jurisdiction. See Vehicle Code Section 22511.2 for further details.

4.106.4.2.1 Reserved.

4.106.4.2.2 Multifamily dwellings, hotels and motels

1. EV ready parking spaces with receptacles.

a. Hotels and motels. Forty (40) percent of the total number of parking spaces shall be equipped with low power Level 2 EV charging receptacles.

b. Multifamily parking facilities. Forty (40) percent of the total number of parking spaces shall be equipped with low power Level 2 EV charging receptacles. EV charging receptacles required by this section shall be located in at least one assigned parking space per dwelling unit where assigned parking is provided but need not exceed forty (40) percent of the total number of assigned parking spaces provided on the site.

Exception: Areas of parking facilities served by parking lifts, including but not limited to automated mechanical-access open parking garages as defined in the *California Building Code*; or parking facilities otherwise incapable of supporting electric vehicle charging.

c. Receptacle power source. EV charging receptacles in multifamily parking facilities shall be provided with a dedicated branch circuit connected to the dwelling unit's electrical panel, unless determined as infeasible by the project builder or designer and subject to concurrence of the local enforcing agency.

Exception: Areas of parking facilities served by parking lifts, including but not limited to automated mechanical-access open parking garages as defined in the *California Building Code*; or parking facilities otherwise incapable of supporting electric vehicle charging.

d. Receptacle configurations. 208/240V EV charging receptacles shall comply with one of the following configurations:

1. For 20-ampere receptacles, NEMA 6-20R
2. For 30-ampere receptacles, NEMA 14-30R
3. For 50-ampere receptacles, NEMA 14-50R

2. EV ready parking spaces with EV chargers.

a. Hotels and motels. Ten (10) percent of the total number of parking spaces shall be equipped with Level 2 EV chargers. At least fifty (50) percent of the required EV chargers shall be equipped with J1772 connectors.

b. Multifamily parking facilities. Ten (10) percent of the total number of parking spaces shall be equipped with Level 2 EV chargers. At least fifty (50) percent of the required EV chargers shall be equipped with J1772 connectors. Where common use parking or unassigned parking is provided, EV chargers shall be located in common use or unassigned parking areas and shall be available for use by all residents or guests.

Where low power Level 2 EV charging receptacles or Level 2 EV chargers are installed beyond the minimum required, an automatic load management system (ALMS) may be used to reduce the maximum required electrical capacity to each space served by the ALMS. The electrical system and any on-site distribution transformers shall have sufficient capacity to deliver at least 3.3 kW simultaneously to each EV charging station (EVCS) served by the ALMS. The branch circuit shall have a minimum capacity of 40 amperes, and installed EV chargers shall have a capacity of not less than 30 amperes.

4.106.4.2.2.1 Electric vehicle charging stations (EVCS).
Electric vehicle charging stations required by Section 4.106.4.2.2, Item 2, with EV chargers installed shall comply with Section 4.106.4.2.2.1.1.

Exception: Electric vehicle charging stations serving public accommodations, public housing, motels and hotels shall not be required to comply with this section. See *California Building Code*, Chapter 11B, for applicable requirements.

4.106.4.2.2.1.1 Electric vehicle charging stations (EVCS) spaces with EV chargers installed; dimensions and location.

EVCS spaces shall be designed to comply with the following:

1. The minimum length of each EVCS space shall be 18 feet (5486 mm).
2. The minimum width of each EVCS space shall be 9 feet (2743 mm).
3. One in every 25 EVCS spaces, but not less than one, shall also have an 8-foot (2438 mm) wide minimum aisle. A 5-foot (1524 mm) wide minimum aisle shall be permitted provided the minimum width of the EVCS space is 12 feet (3658 mm). Surface slope for this EVCS space and the aisle shall not exceed 1 unit vertical in 48 units horizontal (2.083 percent slope) in any direction. These EVCS spaces shall also comply with at least one of the following:

   a. The EVCS space shall be located adjacent to an accessible parking space meeting the requirements of the *California Building Code*, Chapter 11A, to allow use of the EV charger from the accessible parking space.
   b. The EVCS space shall be located on an accessible route, as defined in the *California Building Code*, Chapter 2, to the building.
   Exception: Electric vehicle charging stations designed and constructed in compliance with the *California Building Code*, Chapter 11B, are not required to comply with Section 4.106.4.2.2.1.1.

4.106.4.2.2.1.2 Accessible electric vehicle charging station spaces.
In addition to the requirements in Section 4.106.4.2.2.1.1, all EV chargers, where installed, shall comply with the accessibility provisions for EV chargers in the *California Building Code*, Chapter 11B. EV ready spaces and EVCS in multifamily developments shall comply with *California Building Code*, Chapter 11A, Section 1109A.

4.106.4.2.3 Reserved.

4.106.4.2.4 Reserved.

4.106.4.2.5 Electric vehicle ready space signage.
Electric vehicle ready spaces shall be identified by signage or pavement markings, in compliance with Caltrans Traffic Operations Policy Directive 13-01 (Zero Emission Vehicle Signs and Pavement Markings) or its successor(s).

4.106.4.3 Electric vehicle charging for additions and alterations of parking facilities serving existing multi-family buildings.
Where new parking facilities are added, or electrical systems or lighting of existing parking facilities are added or altered and the work requires a building permit, ten (10) percent of the total number of parking spaces added or altered shall be EV capable spaces to support future Level 2 electric vehicle supply equipment. The service panel or subpanel circuit directory shall identify the overcurrent protective device space(s) reserved for future EV charging purposes as "EV CAPABLE."

Notes:

1.Construction documents are intended to demonstrate the project's capability and capacity for facilitating future EV charging.

2.There is no requirement for EV spaces to be constructed or available until EV chargers are installed for use.

DIVISION 4.2 ENERGY EFFICIENCY

4.201 GENERAL
4.201.1 SCOPE. For the purposes of mandatory energy efficiency standards in this code, the California Energy Commission will continue to adopt mandatory standards.

DIVISION 4.3 WATER EFFICIENCY AND CONSERVATION

4.303 INDOOR WATER USE
4.303.1 WATER CONSERVING PLUMBING FIXTURES AND FITTINGS. Plumbing fixtures (water closets and urinals) and fittings (faucets and showerheads) shall comply with the sections 4.303.1.1, 4.303.1.2, 4.303.1.3, and 4.303.4.4.

Note: All noncompliant plumbing fixtures in any residential real property shall be replaced with water-conserving plumbing fixtures. Plumbing fixture replacement is required prior to issuance of a certificate of final completion, certificate of occupancy, or final permit approval by the local building department. See Civil Code Section 1101.1, et seq., for the definition of a noncompliant plumbing fixture, types of residential buildings affected and other important enactment dates.

4.303.1.1 Water Closets. The effective flush volume of all water closets shall not exceed 1.28 gallons per flush. Tank-type water closets shall be certified to the performance criteria of the U.S. EPA WaterSense Specification for Tank-type Toilets.

Note: The effective flush volume of dual flush toilets is defined as the composite, average flush volume of two reduced flushes and one full flush.

4.303.1.2 Urinals. The effective flush volume of wall mounted urinals shall not exceed 0.125 gallons per flush. The effective flush volume of all other urinals shall not exceed 0.5 gallons per flush.

4.303.1.3 Showerheads.

4.303.1.3.1 Single Showerhead. Showerheads shall have a maximum flow rate of not more than 1.8 gallons per minute at 80 psi. Showerheads shall be certified to the performance criteria of the U.S. EPA WaterSense Specification for Showerheads.

4.303.1.3.2 Multiple showerheads serving one shower. When a shower is served by more than one showerhead, the combined flow rate of all the showerheads and/or other shower outlets controlled by a single valve shall not exceed 1.8 gallons per minute at 80 psi, or the shower shall be designed to only allow one shower outlet to be in operation at a time.

Note: A hand-held shower shall be considered a showerhead.

4.303.1.4 Faucets.

4.303.1.4.1 Residential Lavatory Faucets. The maximum flow rate of residential lavatory faucets shall not exceed 1.2 gallons per minute at 60 psi. The minimum flow rate of residential lavatory faucets shall not be less than 0.8 gallons per minute at 20 psi.

4.303.1.4.2 Lavatory Faucets in Common and Public Use Areas. The maximum flow rate of lavatory faucets installed in common and public use areas (outside of dwellings or sleeping units) in residential buildings shall not exceed 0.5 gallons per minute at 60 psi.

4.303.1.4.3 Metering Faucets. Metering faucets when installed in residential buildings shall not deliver more than 0.2 gallons per cycle.

4.303.1.4.4 Kitchen Faucets. The maximum flow rate of kitchen faucets shall not exceed 1.8 gallons per minute at 60 psi. Kitchen faucets may temporarily increase the flow above the maximum rate, but not to exceed 2.2 gallons per minute at 60 psi, and must default to a maximum flow rate of 1.8 gallons per minute at 60 psi.

Note: Where complying faucets are unavailable, aerators or other means may be used to achieve reduction.

4.303.1.4.5 Pre-rinse spray valves.
When installed, shall meet the requirements in the *California Code of Regulations*, Title 20 (Appliance Efficiency Regulations), Sections 1605.1 (h)(4) Table H-2, Section 1605.3 (h)(4)(A), and Section 1607 (d)(7) and shall be equipped with an integral automatic shutoff.

FOR REFERENCE ONLY: The following table and code section have been reprinted from the *California Code of Regulations*, Title 20 (Appliance Efficiency Regulations),Section 1605.1 (h)(4) and Section 1605.3 (h)(4)(A).

TABLE H-2

STANDARDS FOR COMMERCIAL PRE-RINSE SPRAY VALUES MANUFACTURED ON OR AFTER JANUARY 28, 2019

PRODUCT CLASS [spray force in ounce force (ozf)]	MAXIMUM FLOW RATE (gpm)
Product Class 1 (≤ 5.0 ozf)	1.00
Product Class 2 (> 5.0 ozf and ≤ 8.0 ozf)	1.20
Product Class 3 (> 8.0 ozf)	1.28

Title 20 Section 1605.3 (h)(4)(A): Commercial prerinse spray values manufactured on or after January 1, 2006, shall have a minimum spray force of not less than 4.0 ounces-force (ozf)[113 grams-force(gf)]

4.303.2 Submeters for multifamily buildings and dwelling units in mixed-used residential/commercial buildings.
Submeters shall be installed to measure water usage of individual rental dwelling units in accordance with the *California Plumbing Code*.

4.303.3 Standards for plumbing fixtures and fittings. Plumbing fixtures and fittings shall be installed in accordance with the *California Plumbing Code*, and shall meet the applicable standards referenced in Table 1701.1 of the *California Plumbing Code*.

NOTE:
THIS TABLE COMPILES THE DATA IN SECTION 4.303.1, AND IS INCLUDED AS A CONVENIENCE FOR THE USER.

TABLE - MAXIMUM FIXTURE WATER USE

FIXTURE TYPE	FLOW RATE
SHOWER HEADS (RESIDENTIAL)	1.8 GMP @ 80 PSI
LAVATORY FAUCETS (RESIDENTIAL)	MAX. 1.2 GPM @ 60 PSI MIN. 0.8 GPM @ 20 PSI
LAVATORY FAUCETS IN COMMON & PUBLIC USE AREAS	0.5 GPM @ 60 PSI
KITCHEN FAUCETS	1.8 GPM @ 60 PSI
METERING FAUCETS	0.2 GAL/CYCLE
WATER CLOSET	1.28 GAL/FLUSH
URINALS	0.125 GAL/FLUSH

4.304 OUTDOOR WATER USE
4.304.1 OUTDOOR POTABLE WATER USE IN LANDSCAPE AREAS. Residential developments shall comply with a local water efficient landscape ordinance or the current California Department of Water Resources' Model Water Efficient Landscape Ordinance (MWELO), whichever is more stringent.

NOTES:

1. The Model Water Efficient Landscape Ordinance (MWELO) is located in the *California Code Regulations,* Title 23, Chapter 2.7, Division 2. MWELO and supporting documents, including water budget calculator, are available at: https://www.water.ca.gov/

DIVISION 4.4 MATERIAL CONSERVATION AND RESOURCE EFFICIENCY

4.406 ENHANCED DURABILITY AND REDUCED MAINTENANCE
4.406.1 RODENT PROOFING. Annular spaces around pipes, electric cables, conduits or other openings in sole/bottom plates at exterior walls shall be protected against the passage of rodents by closing such openings with cement mortar, concrete masonry or a similar method acceptable to the enforcing agency.

4.408 CONSTRUCTION WASTE REDUCTION, DISPOSAL AND RECYCLING
4.408.1 CONSTRUCTION WASTE MANAGEMENT. Recycle and/or salvage for reuse a minimum of 65 percent of the non-hazardous construction and demolition waste in accordance with either Section 4.408.2, 4.408.3 or 4.408.4, or meet a more stringent local construction and demolition waste management ordinance.

Exceptions:

1. Excavated soil and land-clearing debris.
2. Alternate waste reduction methods developed by working with local agencies if diversion or recycle facilities capable of compliance with this item do not exist or are not located reasonably close to the jobsite.
3. The enforcing agency may make exceptions to the requirements of this section when isolated jobsites are located in areas beyond the haul boundaries of the diversion facility.

4.408.2 CONSTRUCTION WASTE MANAGEMENT PLAN. Submit a construction waste management plan in conformance with Items 1 through 5. The construction waste management plan shall be updated as necessary and shall be available during construction for examination by the enforcing agency.

1. Identify the construction and demolition waste materials to be diverted from disposal by recycling, reuse on the project or salvage for future use or sale.
2. Specify if construction and demolition waste materials will be sorted on-site (source separated) or bulk mixed (single stream).
3. Identify diversion facilities where the construction and demolition waste material collected will be taken.
4. Identify construction methods employed to reduce the amount of construction and demolition waste generated.
5. Specify that the amount of construction and demolition waste materials diverted shall be calculated by weight or volume, but not by both.

4.408.3 WASTE MANAGEMENT COMPANY. Utilize a waste management company, approved by the enforcing agency, which can provide verifiable documentation that the percentage of construction and demolition waste material diverted from the landfill complies with Section 4.408.1.

Note: The owner or contractor may make the determination if the construction and demolition waste materials will be diverted by a waste management company.

4.408.4 WASTE STREAM REDUCTION ALTERNATIVE [LR]. Projects that generate a total combined weight of construction and demolition waste disposed of in landfills, which do not exceed 3.4 lbs./sq.ft. of the building area shall meet the minimum 65% construction waste reduction requirement in Section 4.408.1

4.408.4.1 WASTE STREAM REDUCTION ALTERNATIVE. Projects that generate a total combined weight of construction and demolition waste disposed of in landfills, which do not exceed 2 pounds per square foot of the building area, shall meet the minimum 65% construction waste reduction requirement in Section 4.408.1

4.408.5 DOCUMENTATION. Documentation shall be provided to the enforcing agency which demonstrates compliance with Section 4.408.2, items 1 through 5, Section 4.408.3 or Section 4.408.4..

Notes:

1. Sample forms found in "A Guide to the California Green Building Standards Code (Residential)" located at www.hcd.ca.gov/CALGreen.html may be used to assist in documenting compliance with this section.
2. Mixed construction and demolition debris (C & D) processors can be located at the California Department of Resources Recycling and Recovery (CalRecycle).

4.410 BUILDING MAINTENANCE AND OPERATION
4.410.1 OPERATION AND MAINTENANCE MANUAL. At the time of final inspection, a manual, compact disc, web-based reference or other media acceptable to the enforcing agency which includes all of the following shall be placed in the building:

1. Directions to the owner or occupant that the manual shall remain with the building throughout the life cycle of the structure.
2. Operation and maintenance instructions for the following:
   a. Equipment and appliances, including water-saving devices and systems, HVAC systems, photovoltaic systems, electric vehicle chargers, water-heating systems and other major appliances and equipment.
   b. Roof and yard drainage, including gutters and downspouts.
   c. Space conditioning systems, including condensers and air filters.
   d. Landscape irrigation systems.
   e. Water reuse systems.
3. Information from local utility, water and waste recovery providers on methods to further reduce resource consumption, including recycle programs and locations.
4. Public transportation and/or carpool options available in the area.
5. Educational material on the positive impacts of an interior relative humidity between 30-60 percent and what methods an occupant may use to maintain the relative humidity level in that range.
6. Information about water-conserving landscape and irrigation design and controllers which conserve water.
7. Instructions for maintaining gutters and downspouts and the importance of diverting water at least 5 feet away from the foundation.
8. Information on required routine maintenance measures, including, but not limited to, caulking, painting, grading around the building, etc.
9. Information about state solar energy and incentive programs available.
10. A copy of all special inspections verifications required by the enforcing agency or this code.
11. Information from the Department of Forestry and Fire Protection on maintenance of defensible space around residential structures.
12. Information and/or drawings identifying the location of grab bar reinforcements.

4.410.2 RECYCLING BY OCCUPANTS. Where 5 or more multifamily dwelling units are constructed on a building site, provide readily accessible area(s) that serves all buildings on the site and are identified for the depositing, storage and collection of non-hazardous materials for recycling, including (at a minimum) paper, corrugated cardboard, glass, plastics, organic waster, and metals, or meet a lawfully enacted local recycling ordinance, if more restrictive.

Exception: Rural jurisdictions that meet and apply for the exemption in Public Resources Code Section 42649.82 (a)(2)(A) et seq. are note required to comply with the organic waste portion of this section.

DIVISION 4.5 ENVIRONMENTAL QUALITY

SECTION 4.501 GENERAL
4.501.1 Scope
The provisions of this chapter shall outline means of reducing the quality of air contaminants that are odorous, irritating and/or harmful to the comfort and well being of a building's installers, occupants and neighbors.

SECTION 4.502 DEFINITIONS
5.102.1 DEFINITIONS
The following terms are defined in Chapter 2 *(and are included here for reference)*

AGRIFIBER PRODUCTS. Agrifiber products include wheatboard, strawboard, panel substrates and door cores, not including furniture, fixtures and equipment (FF&E) not considered base building elements.

COMPOSITE WOOD PRODUCTS. Composite wood products include hardwood plywood, particleboard and medium density fiberboard. "Composite wood products" does not include hardboard, structural plywood, structural panels, structural composite lumber, oriented strand board, glued laminated timber, prefabricated wood I-joists or finger-jointed lumber, all as specified in California Code of regulations (CCR), title 17, Section 93120.1.

DIRECT-VENT APPLIANCE. A fuel-burning appliance with a sealed combustion system that draws all air for combustion from the outside atmosphere and discharges all flue gases to the outside atmosphere.

FOR USE IN THE CITY OF PERRIS

DISCLAIMER: THIS DOCUMENT IS PROVIDED AND INTENDED TO BE USED AS A MEANS TO INDICATE AREAS OF COMPLIANCE WITH THE CALIFORNIA GREEN BUILDING STANDARDS (CALGREEN) CODE. DUE TO THE VARIABLES BETWEEN BUILDING DEPARTMENT JURISDICTIONS, THIS CHECKLIST IS TO BE USED ON AN INDIVIDUAL PROJECT BASIS AND MAY BE MODIFIED BY THE END USER TO MEET THOSE INDIVIDUAL NEEDS. THE END USER ASSUMES ALL RESPONSIBILITY ASSOCIATED WITH THE USE OF THIS DOCUMENT, INCLUDING VERIFICATION WITH THE FULL CODE.

DESIGN PATH STUDIO
architecture + engineering + planning
DESIGNPATHSTUDIO.COM

BY USING THESE PERMIT READY CONSTRUCTION DOCUMENTS, THE RECIPIENT ACKNOWLEDGES, ACCEPTS AND VOLUNTARILY AFFIRMS THE FOLLOWING CONDITIONS:
1. THE USE OF THIS INFORMATION IS RESTRICTED TO THE ORIGINAL PROJECT FOR WHICH IT WAS PREPARED FOR THE PERMIT READY ACCESSORY DWELLING UNIT (ADU) PROGRAM FOR THE CITY OF PERRIS ONLY. THIS IS A LIMITED SET OF STANDARDIZED ADU PLANS AND SPECIFICATIONS APPROVED BY THE CITY OF PERRIS BUILDING DEPARTMENT. BUILDING CODES DO CHANGE OVER TIME AND RECIPIENT SHALL ENSURE FULL COMPLIANCE UNDER ALL CODES THEN IN EFFECT AT THE TIME OF THE SUBJECT PERMIT. THIS DOES NOT ELIMINATE OR REDUCE THE RECIPIENT'S RESPONSIBILITY TO VERIFY ANY AND ALL INFORMATION RELEVANT TO THE RECIPIENT'S WORK AND RESPONSIBILITY ON THIS PROJECT. DESIGN PATH STUDIO SHALL NOT BE RESPONSIBLE FOR TRANSLATION ERRORS. DO NOT USE THESE CONSTRUCTION DOCUMENTS IF THE PERMIT HAS EXPIRED OR IS REVOKED AT ALL.
2. THE RECIPIENT RECOGNIZES AND ACKNOWLEDGES THAT THE USE OF THIS INFORMATION WILL BE AT THEIR SOLE RISK AND WITHOUT ANY LIABILITY OR LEGAL EXPOSURE TO DESIGN PATH STUDIO. NO WARRANTIES OF ANY NATURE, WHETHER EXPRESS OR IMPLIED, SHALL ATTACH TO THESE DOCUMENTS AND THE INFORMATION CONTAINED THEREON. ANY USE, REUSE, OR ALTERATION OF THESE DOCUMENTS BY THE RECIPIENT OR BY OTHERS WILL BE AT THE RECIPIENT'S RISK AND FULL LEGAL RESPONSIBILITY. FURTHERMORE, THE RECIPIENT WILL, TO THE FULLEST EXTENT PERMITTED BY LAW, DEFEND, INDEMNIFY AND HOLD DESIGN PATH STUDIO AND ITS ARCHITECTS HARMLESS FROM ANY AND ALL CLAIMS, SUITS, LIABILITY, DEMANDS, JUDGMENTS, OR COSTS ARISING OUT OF OR RESULTING THERE FROM ANY USE OF THESE CONSTRUCTION DOCUMENTS FOR OR ON ACCOUNT OF ANY INJURY, DEATH, DAMAGE OR LOSS TO PERSONS OR PROPERTY, DIRECT OR CONSEQUENTIAL DAMAGES IN ANY AMOUNT. THIS INDEMNITY DOES NOT APPLY TO THE SOLE NEGLIGENCE OR WILLFUL MISCONDUCT OF DESIGN PATH STUDIO OR ITS ARCHITECTS.
3. THE DESIGNS REPRESENTED BY THESE PLANS ARE COPYRIGHTED AND ARE SUBJECT TO COPYRIGHT PROTECTION.
4. IF THE RECIPIENT DOES NOT AGREE WITH THE ABOVE CONDITIONS, DO NOT PROCEED WITH CONSTRUCTION OF AN ADU OR OTHER IMPROVEMENT UNDER THESE PLANS AT ALL.

project
City of Perris
Pre-Approved
ADU Program

revisions
01

description
Calgreen
Checklist

date 4 April 2025
project no. PERRIS PRADU
drawn by DESIGN PATH STUDIO
sheet no. G0.1

2022 CALIFORNIA GREEN BUILDING STANDARDS CODE
RESIDENTIAL MANDATORY MEASURES, SHEET 2 (July 2024 Supplement)

Y = YES
N/A = NOT APPLICABLE
RESPON. PARTY = RESPONSIBLE PARTY (ie: ARCHITECT, ENGINEER, OWNER, CONTRACTOR, INSPECTOR ETC.)

Y	N/A	RESPON. PARTY

MAXIMUM INCREMENTAL REACTIVITY (MIR). The maximum change in weight of ozone formed by adding a compound to the "Base Reactive Organic Gas (ROG) Mixture" per weight of compound added, expressed to hundredths of a gram (g O^3/g ROC).
Note: MIR values for individual compounds and hydrocarbon solvents are specified in CCR, Title 17, Sections 94700 and 94701.

MOISTURE CONTENT. The weight of the water in wood expressed in percentage of the weight of the oven-dry wood.

PRODUCT-WEIGHTED MIR (PWMIR). The sum of all weighted-MIR for all ingredients in a product subject to this article. The PWMIR is the total product reactivity expressed to hundredths of a gram of ozone formed per gram of product (excluding container and packaging).
Note: PWMIR is calculated according to equations found in CCR, Title 17, Section 94521 (a).

REACTIVE ORGANIC COMPOUND (ROC). Any compound that has the potential, once emitted, to contribute to ozone formation in the troposphere.

VOC. A volatile organic compound (VOC) broadly defined as a chemical compound based on carbon chains or rings with vapor pressures greater than 0.1 millimeters of mercury at room temperature. These compounds typically contain hydrogen and may contain oxygen, nitrogen and other elements. See CCR Title 17, Section 94508(a).

4.503 FIREPLACES
4.503.1 GENERAL. Any installed gas fireplace shall be a direct-vent sealed-combustion type. Any installed woodstove or pellet stove shall comply with U.S. EPA New Source Performance Standards (NSPS) emission limits as applicable, and shall have a permanent label indicating they are certified to meet the emission limits. Woodstoves, pellet stoves and fireplaces shall also comply with applicable local ordinances.

4.504 POLLUTANT CONTROL
4.504.1 COVERING OF DUCT OPENINGS & PROTECTION OF MECHANICAL EQUIPMENT DURING CONSTRUCTION. At the time of rough installation, during storage on the construction site and until final startup of the heating, cooling and ventilating equipment, all duct and other related air distribution component openings shall be covered with tape, plastic, sheet metal or other methods acceptable to the enforcing agency to reduce the amount of water, dust or debris which may enter the system.

4.504.2 FINISH MATERIAL POLLUTANT CONTROL. Finish materials shall comply with this section.

4.504.2.1 Adhesives, Sealants and Caulks. Adhesives, sealant and caulks used on the project shall meet the requirements of the following standards unless more stringent local or regional air pollution or air quality management district rules apply:

1. Adhesives, adhesive bonding primers, adhesive primers, sealants, sealant primers and caulks shall comply with local or regional air pollution control or air quality management district rules where applicable or SCAQMD Rule 1168 VOC limits, as shown in Table 4.504.1 or 4.504.2, as applicable. Such products also shall comply with the Rule 1168 prohibition on the use of certain toxic compounds (chloroform, ethylene dichloride, methylene chloride, perchloroethylene and tricloroethylene), except for aerosol products, as specified in Subsection 2 below.

2. Aerosol adhesives, and smaller unit sizes of adhesives, and sealant or caulking compounds (in units of product, less packaging, which do not weigh more than 1 pound and do not consist of more than 16 fluid ounces) shall comply with statewide VOC standards and other requirements, including prohibitions on use of certain toxic compounds, of *California Code of Regulations*, Title 17, commencing with section 94507.

4.504.2.2 Paints and Coatings. Architectural paints and coatings shall comply with VOC limits in Table 1 of the ARB Architectural Suggested Control Measure, as shown in Table 4.504.3, unless more stringent local limits apply. The VOC content limit for coatings that do not meet the definitions for the specialty coatings categories listed in Table 4.504.3 shall be determined by classifying the coating as a Flat, Nonflat or Nonflat-High Gloss coating, based on its gloss, as defined in subsections 4.21, 4.36, and 4.37 of the 2007 California Air Resources Board, Suggested Control Measure, and the corresponding Flat, Nonflat or Nonflat-High Gloss VOC limit in Table 4.504.3 shall apply.

4.504.2.3 Aerosol Paints and Coatings. Aerosol paints and coatings shall meet the Product-weighted MIR Limits for ROC in Section 94522(a)(2) and other requirements, including prohibitions on use of certain toxic compounds and ozone depleting substances, in Sections 94522(e)(1) and (f)(1) of *California Code of Regulations*, Title 17, commencing with Section 94520; and in areas under the jurisdiction of the Bay Area Air Quality Management District additionally comply with the percent VOC by weight of product limits of Regulation 8, Rule 49.

4.504.2.4 Verification. Verification of compliance with this section shall be provided at the request of the enforcing agency. Documentation may include, but is not limited to, the following:

1. Manufacturer's product specification.
2. Field verification of on-site product containers.

TABLE 4.504.1 - ADHESIVE VOC LIMIT[1,2]

(Less Water and Less Exempt Compounds in Grams per Liter)

ARCHITECTURAL APPLICATIONS	VOC LIMIT
INDOOR CARPET ADHESIVES	50
CARPET PAD ADHESIVES	50
OUTDOOR CARPET ADHESIVES	150
WOOD FLOORING ADHESIVES	100
RUBBER FLOOR ADHESIVES	60
SUBFLOOR ADHESIVES	50
CERAMIC TILE ADHESIVES	65
VCT & ASPHALT TILE ADHESIVES	50
DRYWALL & PANEL ADHESIVES	50
COVE BASE ADHESIVES	50
MULTIPURPOSE CONSTRUCTION ADHESIVE	70
STRUCTURAL GLAZING ADHESIVES	100
SINGLE-PLY ROOF MEMBRANE ADHESIVES	250
OTHER ADHESIVES NOT LISTED	50
SPECIALTY APPLICATIONS	
PVC WELDING	510
CPVC WELDING	490
ABS WELDING	325
PLASTIC CEMENT WELDING	250
ADHESIVE PRIMER FOR PLASTIC	550
CONTACT ADHESIVE	80
SPECIAL PURPOSE CONTACT ADHESIVE	250
STRUCTURAL WOOD MEMBER ADHESIVE	140
TOP & TRIM ADHESIVE	250
SUBSTRATE SPECIFIC APPLICATIONS	
METAL TO METAL	30
PLASTIC FOAMS	50
POROUS MATERIAL (EXCEPT WOOD)	50
WOOD	30
FIBERGLASS	80

1. IF AN ADHESIVE IS USED TO BOND DISSIMILAR SUBSTRATES TOGETHER, THE ADHESIVE WITH THE HIGHEST VOC CONTENT SHALL BE ALLOWED.

2. FOR ADDITIONAL INFORMATION REGARDING METHODS TO MEASURE THE VOC CONTENT SPECIFIED IN THIS TABLE, SEE SOUTH COAST AIR QUALITY MANAGEMENT DISTRICT RULE 1168.

TABLE 4.504.2 - SEALANT VOC LIMIT

(Less Water and Less Exempt Compounds in Grams per Liter)

SEALANTS	VOC LIMIT
ARCHITECTURAL	250
MARINE DECK	760
NONMEMBRANE ROOF	300
ROADWAY	250
SINGLE-PLY ROOF MEMBRANE	450
OTHER	420
SEALANT PRIMERS	
ARCHITECTURAL	
NON-POROUS	250
POROUS	775
MODIFIED BITUMINOUS	500
MARINE DECK	760
OTHER	750

TABLE 4.504.3 - VOC CONTENT LIMITS FOR ARCHITECTURAL COATINGS[2,3]

GRAMS OF VOC PER LITER OF COATING, LESS WATER & LESS EXEMPT COMPOUNDS

COATING CATEGORY	VOC LIMIT
FLAT COATINGS	50
NON-FLAT COATINGS	100
NONFLAT-HIGH GLOSS COATINGS	150
SPECIALTY COATINGS	
ALUMINUM ROOF COATINGS	400
BASEMENT SPECIALTY COATINGS	400
BITUMINOUS ROOF COATINGS	50
BITUMINOUS ROOF PRIMERS	350
BOND BREAKERS	350
CONCRETE CURING COMPOUNDS	350
CONCRETE/MASONRY SEALERS	100
DRIVEWAY SEALERS	50
DRY FOG COATINGS	150
FAUX FINISHING COATINGS	350
FIRE RESISTIVE COATINGS	350
FLOOR COATINGS	100
FORM-RELEASE COMPOUNDS	250
GRAPHIC ARTS COATINGS (SIGN PAINTS)	500
HIGH TEMPERATURE COATINGS	420
INDUSTRIAL MAINTENANCE COATINGS	250
LOW SOLIDS COATINGS[1]	120
MAGNESITE CEMENT COATINGS	450
MASTIC TEXTURE COATINGS	100
METALLIC PIGMENTED COATINGS	500
MULTICOLOR COATINGS	250
PRETREATMENT WASH PRIMERS	420
PRIMERS, SEALERS, & UNDERCOATERS	100
REACTIVE PENETRATING SEALERS	350
RECYCLED COATINGS	250
ROOF COATINGS	50
RUST PREVENTATIVE COATINGS	250
SHELLACS	
CLEAR	730
OPAQUE	550
SPECIALTY PRIMERS, SEALERS & UNDERCOATERS	100
STAINS	250
STONE CONSOLIDANTS	450
SWIMMING POOL COATINGS	340
TRAFFIC MARKING COATINGS	100
TUB & TILE REFINISH COATINGS	420
WATERPROOFING MEMBRANES	250
WOOD COATINGS	275
WOOD PRESERVATIVES	350
ZINC-RICH PRIMERS	340

1. GRAMS OF VOC PER LITER OF COATING, INCLUDING WATER & EXEMPT COMPOUNDS

2. THE SPECIFIED LIMITS REMAIN IN EFFECT UNLESS REVISED LIMITS ARE LISTED IN SUBSEQUENT COLUMNS IN THE TABLE.

3. VALUES IN THIS TABLE ARE DERIVED FROM THOSE SPECIFIED BY THE CALIFORNIA AIR RESOURCES BOARD, ARCHITECTURAL COATINGS SUGGESTED CONTROL MEASURE, FEB. 1, 2008. MORE INFORMATION IS AVAILABLE FROM THE AIR RESOURCES BOARD.

TABLE 4.504.5 - FORMALDEHYDE LIMITS[1]

MAXIMUM FORMALDEHYDE EMISSIONS IN PARTS PER MILLION

PRODUCT	CURRENT LIMIT
HARDWOOD PLYWOOD VENEER CORE	0.05
HARDWOOD PLYWOOD COMPOSITE CORE	0.05
PARTICLE BOARD	0.09
MEDIUM DENSITY FIBERBOARD	0.11
THIN MEDIUM DENSITY FIBERBOARD[2]	0.13

1. VALUES IN THIS TABLE ARE DERIVED FROM THOSE SPECIFIED BY THE CALIF. AIR RESOURCES BOARD, AIR TOXICS CONTROL MEASURE FOR COMPOSITE WOOD AS TESTED IN ACCORDANCE WITH ASTM E 1333. FOR ADDITIONAL INFORMATION, SEE CALIF. CODE OF REGULATIONS, TITLE 17, SECTIONS 93120 THROUGH 93120.12.

2. THIN MEDIUM DENSITY FIBERBOARD HAS A MAXIMUM THICKNESS OF 5/16" (8 MM).

DIVISION 4.5 ENVIRONMENTAL QUALITY (continued)
4.504.3 CARPET SYSTEMS. All carpet installed in the building interior shall meet the requirements of the California Department of Public Health, "Standard Method for the Testing and Evaluation of Volatile Organic Chemical Emissions from Indoor Sources Using Environmental Chambers," Version 1.2, January 2017 (Emission testing method for California Specification 01350)

See California Department of Public Health's website for certification programs and testing labs.

https://www.cdph.ca.gov/Programs/CCDPHP/DEODC/EHLB/IAQ/Pages/VOC.aspx.

4.504.3.1 Carpet cushion. All carpet cushion installed in the building interior shall meet the requirements of the California Department of Public Health, "Standard Method for the Testing and Evaluation of Volatile Organic Chemical Emissions from Indoor Sources Using Environmental Chambers," Version 1.2, January 2017 (Emission testing method for California Specification 01350)

See California Department of Public Health's website for certification programs and testing labs.

https://www.cdph.ca.gov/Programs/CCDPHP/DEODC/EHLB/IAQ/Pages/VOC.aspx.

4.504.3.2 Carpet adhesive. All carpet adhesive shall meet the requirements of Table 4.504.1.

4.504.4 RESILIENT FLOORING SYSTEMS. Where resilient flooring is installed , at least 80% of floor area receiving resilient flooring shall meet the requirements of the California Department of Public Health, "Standard Method for the Testing and Evaluation of Volatile Organic Chemical Emissions from Indoor Sources Using Environmental Chambers," Version 1.2, January 2017 (Emission testing method for California Specification 01350)

See California Department of Public Health's website for certification programs and testing labs.

hhtps://www.cdph.ca.gov/Programs/CCDPHP/DEODC/EHLB/IAQ/Pages/VOC.aspx.

4.504.5 COMPOSITE WOOD PRODUCTS. Hardwood plywood, particleboard and medium density fiberboard composite wood products used on the interior or exterior of the buildings shall meet the requirements for formaldehyde as specified in ARB's Air Toxics Control Measure for Composite Wood (17 CCR 93120 et seq.), by or before the dates specified in those sections, as shown in Table 4.504.5

4.504.5.1 Documentation. Verification of compliance with this section shall be provided as requested by the enforcing agency. Documentation shall include at least one of the following:

1. Product certifications and specifications.
2. Chain of custody certifications.
3. Product labeled and invoiced as meeting the Composite Wood Products regulation (see CCR, Title 17, Section 93120, et seq.).
4. Exterior grade products marked as meeting the PS-1 or PS-2 standards of the Engineered Wood Association, the Australian AS/NZS 2269, European 636 3S standards, and Canadian CSA 0121, CSA 0151, CSA 0153 and CSA 0325 standards.
5. Other methods acceptable to the enforcing agency.

4.505 INTERIOR MOISTURE CONTROL
4.505.1 General. Buildings shall meet or exceed the provisions of the *California Building Standards Code*.

4.505.2 CONCRETE SLAB FOUNDATIONS. Concrete slab foundations required to have a vapor retarder by California Building Code, Chapter 19, or concrete slab-on-ground floors required to have a vapor retarder by the California Residential Code, Chapter 5, shall also comply with this section.

4.505.2.1 Capillary break. A capillary break shall be installed in compliance with at least one of the following:

1. A 4-inch (101.6 mm) thick base of 1/2 inch (12.7mm) or larger clean aggregate shall be provided with a vapor barrier in direct contact with concrete and a concrete mix design, which will address bleeding, shrinkage, and curling, shall be used. For additional information, see American Concrete Institute, ACI 302.2R-06.
2. Other equivalent methods approved by the enforcing agency.
3. A slab design specified by a licensed design professional.

4.505.3 MOISTURE CONTENT OF BUILDING MATERIALS. Building materials with visible signs of water damage shall not be installed. Wall and floor framing shall not be enclosed when the framing members exceed 19 percent moisture content. Moisture content shall be verified in compliance with the following:

1. Moisture content shall be determined with either a probe-type or contact-type moisture meter.Equivalent moisture verification methods may be approved by the enforcing agency and shall satisfy requirements found in Section 101.8 of this code.
2. Moisture readings shall be taken at a point 2 feet (610 mm) to 4 feet (1219 mm) from the grade stamped end of each piece verified.
3. At least three random moisture readings shall be performed on wall and floor framing with documentation acceptable to the enforcing agency provided at the time of approval to enclose the wall and floor framing.

Insulation products which are visibly wet or have a high moisture content shall be replaced or allowed to dry prior to enclosure in wall or floor cavities. Wet-applied insulation products shall follow the manufacturers' drying recommendations prior to enclosure.

4.506 INDOOR AIR QUALITY AND EXHAUST
4.506.1 Bathroom exhaust fans. Each bathroom shall be mechanically ventilated and shall comply with the following:

1. Fans shall be ENERGY STAR compliant and be ducted to terminate outside the building.
2. Unless functioning as a component of a whole house ventilation system, fans must be controlled by a humidity control.
   a. Humidity controls shall be capable of adjustment between a relative humidity range less than or equal to 50% to a maximum of 80%. A humidity control may utilize manual or automatic means of adjustment.
   b. A humidity control may be a separate component to the exhaust fan and is not required to be integral (i.e., built-in)

Notes:

1. For the purposes of this section, a bathroom is a room which contains a bathtub, shower or tub/shower combination.
2. Lighting integral to bathroom exhaust fans shall comply with the *California Energy Code.*

4.507 ENVIRONMENTAL COMFORT
4.507.2 HEATING AND AIR-CONDITIONING SYSTEM DESIGN. Heating and air conditioning systems shall be sized, designed and have their equipment selected using the following methods:

1. The heat loss and heat gain is established according to ANSI/ACCA 2 Manual J - 2011 (Residential Load Calculation), ASHRAE handbooks or other equivalent design software or methods.
2. Duct systems are sized according to ANSI/ACCA 1 Manual D - 2014 (Residential Duct Systems), ASHRAE handbooks or other equivalent design software or methods.
3. Select heating and cooling equipment according to ANSI/ACCA 3 Manual S - 2014 (Residential Equipment Selection), or other equivalent design software or methods.

Exception: Use of alternate design temperatures necessary to ensure the system functions are acceptable.

CHAPTER 7
INSTALLER & SPECIAL INSPECTOR QUALIFICATIONS

702 QUALIFICATIONS
702.1 INSTALLER TRAINING. HVAC system installers shall be trained and certified in the proper installation of HVAC systems including ducts and equipment by a nationally or regionally recognized training or certification program. Uncertified persons may perform HVAC installations when under the direct supervision and responsibility of a person trained and certified to install HVAC systems or contractor licensed to install HVAC systems. Examples of acceptable HVAC training and certification programs include but are not limited to the following:

1. State certified apprenticeship programs.
2. Public utility training programs.
3. Training programs sponsored by trade, labor or statewide energy consulting or verification organizations.
4. Programs sponsored by manufacturing organizations.
5. Other programs acceptable to the enforcing agency.

702.2 SPECIAL INSPECTION [HCD]. When required by the enforcing agency, the owner or the responsible entity acting as the owner's agent shall employ one or more special inspectors to provide inspection or other duties necessary to substantiate compliance with this code. Special inspectors shall demonstrate competence to the satisfaction of the enforcing agency for the particular type of inspection or task to be performed. In addition to other certifications or qualifications acceptable to the enforcing agency, the following certifications or education may be considered by the enforcing agency when evaluating the qualifications of a special inspector:

1. Certification by a national or regional green building program or standard publisher.
2. Certification by a statewide energy consulting or verification organization, such as HERS raters, building performance contractors, and home energy auditors.
3. Successful completion of a third party apprentice training program in the appropriate trade.
4. Other programs acceptable to the enforcing agency.

Notes:
1. Special inspectors shall be independent entities with no financial interest in the materials or the project they are inspecting for compliance with this code.
2. HERS raters are special inspectors certified by the California Energy Commission (CEC) to rate homes in California according to the Home Energy Rating System (HERS).

[BSC] When required by the enforcing agency, the owner or the responsible entity acting as the owner's agent shall employ one or more special inspectors to provide inspection or other duties necessary to substantiate compliance with this code. Special inspectors shall demonstrate competence to the satisfaction of the enforcing agency for the particular type of inspection or task to be performed. In addition, the special inspector shall have a certification from a recognized state, national or international association, as determined by the local agency. The area of certification shall be closely related to the primary job function, as determined by the local agency.

Note: Special inspectors shall be independent entities with no financial interest in the materials or the project they are inspecting for compliance with this code.

703 VERIFICATIONS
703.1 DOCUMENTATION. Documentation used to show compliance with this code shall include but is not limited to, construction documents, plans, specifications, builder or installer certification, inspection reports, or other methods acceptable to the enforcing agency which demonstrate substantial conformance. When specific documentation or special inspection is necessary to verify compliance, that method of compliance will be specified in the appropriate section or identified applicable checklist.

FOR USE IN THE CITY OF PERRIS

DISCLAIMER: *THIS DOCUMENT IS PROVIDED AND INTENDED TO BE USED AS A MEANS TO INDICATE AREAS OF COMPLIANCE WITH THE CALIFORNIA GREEN BUILDING STANDARDS (CALGREEN) CODE. DUE TO THE VARIABLES BETWEEN BUILDING DEPARTMENT JURISDICTIONS, THIS CHECKLIST IS TO BE USED ON AN INDIVIDUAL PROJECT BASIS AND MAY BE MODIFIED BY THE END USER TO MEET THOSE INDIVIDUAL NEEDS. THE END USER ASSUMES ALL RESPONSIBILITY ASSOCIATED WITH THE USE OF THIS DOCUMENT, INCLUDING VERIFICATION WITH THE FULL CODE.*

DESIGN PATH STUDIO
architecture + engineering + planning
DESIGNPATHSTUDIO.COM

BY USING THESE PERMIT READY CONSTRUCTION DOCUMENTS, THE RECIPIENT ACKNOWLEDGES, ACCEPTS AND VOLUNTARILY AFFIRMS THE FOLLOWING CONDITIONS:
1. THE USE OF THIS INFORMATION IS RESTRICTED TO THE ORIGINAL PROJECT FOR WHICH IT WAS PREPARED FOR THE PERMIT READY ACCESSORY DWELLING UNIT (ADU) PROGRAM FOR THE CITY OF PERRIS ONLY. THIS IS A LIMITED SET OF STANDARDIZED ADU PLANS AND SPECIFICATIONS APPROVED BY THE CITY OF PERRIS BUILDING DEPARTMENT. BUILDING CODES DO CHANGE OVER TIME AND RECIPIENT SHALL ENSURE FULL COMPLIANCE UNDER ALL CODES THEN IN EFFECT AT THE TIME OF THE SUBJECT PERMIT. THIS DOES NOT ELIMINATE OR REDUCE THE RECIPIENT'S RESPONSIBILITY TO VERIFY ANY AND ALL INFORMATION RELEVANT TO THE RECIPIENT'S WORK AND RESPONSIBILITY ON THIS PROJECT. DESIGN PATH STUDIO SHALL NOT BE RESPONSIBLE FOR TRANSLATION ERRORS. DO NOT USE THESE CONSTRUCTION DOCUMENTS IF THE PERMIT HAS EXPIRED OR IS REVOKED AT ALL.
2. THE RECIPIENT RECOGNIZES AND ACKNOWLEDGES THAT THE USE OF THIS INFORMATION WILL BE AT THEIR SOLE RISK AND WITHOUT ANY LIABILITY OR LEGAL EXPOSURE TO DESIGN PATH STUDIO. NO WARRANTIES OF ANY NATURE, WHETHER EXPRESS OR IMPLIED, SHALL ATTACH TO THESE DOCUMENTS AND THE INFORMATION CONTAINED THEREON. ANY USE, REUSE, OR ALTERATION OF THESE DOCUMENTS BY THE RECIPIENT OR BY OTHERS WILL BE AT THE RECIPIENT'S RISK AND FULL LEGAL RESPONSIBILITY. FURTHERMORE, THE RECIPIENT WILL, TO THE FULLEST EXTENT PERMITTED BY LAW, DEFEND, INDEMNIFY AND HOLD DESIGN PATH STUDIO AND ITS ARCHITECTS HARMLESS FROM ANY AND ALL CLAIMS, SUITS, LIABILITY, DEMANDS, JUDGMENTS, OR COSTS ARISING OUT OF OR RESULTING THERE FROM ANY USE OF THESE CONSTRUCTION DOCUMENTS FOR OR ON ACCOUNT OF ANY INJURY, DEATH, DAMAGE OR LOSS TO PERSONS OR PROPERTY, DIRECT OR CONSEQUENTIAL DAMAGES IN ANY AMOUNT. THIS INDEMNITY DOES NOT APPLY TO THE SOLE NEGLIGENCE OR WILLFUL MISCONDUCT OF DESIGN PATH STUDIO OR ITS ARCHITECTS.
3. THE DESIGNS REPRESENTED BY THESE PLANS ARE COPYRIGHTED AND ARE SUBJECT TO COPYRIGHT PROTECTION.
4. IF THE RECIPIENT DOES NOT AGREE WITH THE ABOVE CONDITIONS, DO NOT PROCEED WITH CONSTRUCTION OF AN ADU OR OTHER IMPROVEMENT UNDER THESE PLANS AT ALL.

project
City of Perris
Pre-Approved
ADU Program

revisions
01

description
Calgreen
Checklist

date 4 April 2025
project no. PERRIS PRADU
drawn by DESIGN PATH STUDIO
sheet no. G0.2

ARCHITECTUAL GENERAL NOTES

1. DO NOT SCALE THE DRAWING, USE THE DIMENSIONS ONLY. IF A DISCREPANCY IS FOUND TO EXIST, NOTIFY THE OWNER.
2. THESE PLANS/SPECIFICATIONS AND ALL WORK SHALL COMPLY WITH CURRENT EDITION OF STATE OF CALIFORNIA TITLE 24 CCR AND CURRENT CPC, CMC AND CEC CODES.
3. DETAILS ARE INTENDED TO SHOW METHOD AND MANNER OF ACCOMPLISHING WORK. MINOR MODIFICATIONS MAY BE REQUIRED TO SUIT THE JOB DIMENSIONS OR CONDITIONS AND IS TO BE REVIEWED AND APPROVED BY THE CITY OF PERRIS.
4. VERIFY ALL DIMENSIONS AND CONDITIONS AT THE SITE AND STAKE OUT STRUCTURE FOR OWNER'S APPROVAL PRIOR TO STARTING ANY WORK.
5. ALL WEATHER-EXPOSED SURFACES ARE TO HAVE A WEATHER-RESISTIVE BARRIER TO PROTECT THE INTERIOR WALL COVERING AND THAT EXTERIOR OPENINGS ARE TO BE FLASHED IN SUCH A MANNER AS TO MAKE THEM WEATHERPROOF.
6. SPECIFICATIONS FOR EQUIPMENT SHALL BE KEPT ON SITE TO PROVIDE TO THE CITY OF PERRIS BUILDING INSPECTOR
7. AN ENCROACHMENT PERMIT IS REQUIRED FOR ANY CONSTRUCTION, RECONSTRUCTION, OR CLOSURE OR THE ROADWAY, SIDEWALK OR RIGHT OF WAY. APPLICANT SHALL CONTACT ENGINEERING DEPARTMENT TO PROCESS.
8. APPLICANT IS RESPONSIBLE TO PROVIDE SITE PLAN (PLOT PLAN) TO THE CITY FOR REVIEW AND APPROVAL.
9. APPLICANT IS RESPONSIBLE TO VERIFY WHETHER THE JOB SITE IS LOCATED WITHIN A FEDERAL EMERGENCY MANAGEMENT AGENCY (FEMA) FLOOD ZONE. PROJECTS LOCATED IN A SPECIAL FLOOD HAZARD AREA DESIGNATED ON THE FLOOD INSURANCE RATE MAP (FIRM) AS ZONE A OR AE, SHALL PROVIDE AN ELEVATION CERTIFICATE WITH SUPPORTED DOCUMENTS TO THE CITY FOR REVIEW AND APPROVAL PRIOR TO BUILDING PERMIT ISSUANCE.
10. SUBMIT GRADING PLANS AND/OR PROVIDE ADU GRADING PERMIT EXEMPTION CHECKLIST FOR REVIEW AND APPROVAL AT TIME OF PERMIT APPLICATION.
11. THE PV SYSTEM WILL BE SUBMITTED UNDER A SEPARATE PERMIT. A PHOTOVOLTAIC (SOLAR) SYSTEM BUILDING AND ELECTRICAL PERMIT SHALL BE ISSUED PRIOR TO ADU BUILDING FRAME INSPECTION REQUEST.
12. SOIL REPORT REQUIREMENT: IF A SOILS REPORT IS REQUIRED BY THE LOCAL JURISDICTION, THE GEOTECHNICAL INVESTIGATIONS SHALL BE CONDUCTED IN ACCORDANCE WITH CBC SECTION 1803.2 AND REPORTED IN ACCORDANCE WITH CBC SECTION 1803.6. -THE GEOTECHNICAL ENGINEER OF RECORD SHALL REVIEW THE CITY APPROVED PLANS FOR GENERAL CONFORMANCE WITH THE SOIL REPORT; OTHERWISE, AN ALTERNATE FOUNDATION PLAN DESIGNED BY A CALIFORNIA REGISTERED CIVIL ENGINEER IS REQUIRED

ROOF NOTES

1. FLASHINGS SHALL BE INSTALLED IN A MANNER THAT PREVENTS MOISTURE FROM ENTERING THE WALL AND ROOF THROUGH JOINTS IN COPINGS, THROUGH MOISTURE PERMEABLE MATERIALS AND AT INTERSECTIONS WITH PARAPET WALLS AND OTHER PENETRATIONS THROUGH THE ROOF PLANE.
2. UNLESS ROOFS ARE SLOPED TO DRAIN OVER ROOF EDGES, ROOF DRAINS SHALL BE INSTALLED AT EACH LOW POINT OF ROOF.
3. ROOF ASSEMBLIES SHALL BE OF MATERIALS THAT ARE COMPATIBLE WITH EACH OTHER AND WITH THE BUILDING OR STRUCTURE TO WHICH THE MATERIALS ARE APPLIED.
4. BUILDING-INTEGRATED PHOTOVOLTAIC PRODUCTS INSTALLED AS THE ROOF COVERING SHALL BE TESTED, LISTED AND LABELED FOR FIRE CLASSIFICATION IN ACCORDANCE WITH SECTION R902.1 THROUGH R902.4.
5. ASPHALT SHINGLES SHALL BE USED ONLY ON ROOF SLOPES OF TWO UNITS VERTICAL IN 12 UNITS HORIZONTAL (17-PERCENT SLOPE) OR GREATER. FOR ROOF SLOPES FROM TWO UNITS VERTICAL IN 12 UNITS HORIZONTAL (17-PERCENT SLOPE) UP TO FOUR UNITS VERTICAL IN 12 UNITS HORIZONTAL (33-PERCENT SLOPE), DOUBLE UNDERLAYMENT APPLICATION IS REQUIRED IN ACCORDANCE WITH SECTION R905.1.1.
6. CLAY AND CONCRETE ROOF TILE SHALL BE INSTALLED ON ROOF SLOPES OF TWO AND ONE-HALF UNITS VERTICAL IN 12 UNITS HORIZONTAL (25-PERCENT SLOPE) OR GREATER. FOR ROOF SLOPES FROM TWO AND ONE-HALF UNITS VERTICAL IN 12 UNITS HORIZONTAL (25-PERCENT SLOPE) TO FOUR UNITS VERTICAL IN 12 UNITS HORIZONTAL (33-PERCENT SLOPE), DOUBLE UNDERLAYMENT APPLICATION IS REQUIRED IN ACCORDANCE WITH SECTION R905.3.3.
7. SLATE SHINGLES SHALL BE USED ONLY ON SLOPES OF FOUR UNITS VERTICAL IN 12 UNITS HORIZONTAL (33-PERCENT SLOPE) OR GREATER.
8. THE MINIMUM SLOPE FOR STANDING-SEAM ROOF SYSTEMS SHALL BE ONE-QUARTER UNIT VERTICAL IN 12 UNITS HORIZONTAL (2-PERCENT SLOPE).
9. BUILT-UP ROOFS SHALL HAVE A DESIGN SLOPE OF NOT LESS THAN ONE-FOURTH UNIT VERTICAL IN 12 UNITS HORIZONTAL (2-PERCENT SLOPE) FOR DRAINAGE, EXCEPT FOR COAL-TAR BUILT-UP ROOFS, WHICH SHALL HAVE A DESIGN SLOPE OF A MINIMUM ONE-EIGHTH UNIT VERTICAL IN 12 UNITS HORIZONTAL (1-PERCENT SLOPE).
10. MINERAL-SURFACED ROLL ROOFING SHALL NOT BE APPLIED ON ROOF SLOPES BELOW ONE UNIT VERTICAL IN 12 UNITS HORIZONTAL (8-PERCENT SLOPE).
11. MODIFIED BITUMEN ROOFING SHALL HAVE A DESIGN SLOPE OF NOT LESS THAN ONE-FOURTH UNIT VERTICAL IN 12 UNITS HORIZONTAL (2-PERCENT SLOPE) FOR DRAINAGE.
12. SINGLE-PLY MEMBRANE ROOFS SHALL HAVE A DESIGN SLOPE OF NOT LESS THAN ONE-FOURTH UNIT VERTICAL IN 12 UNITS HORIZONTAL (2-PERCENT SLOPE) FOR DRAINAGE.
13. A CLASS A ROOF ASSEMBLY SHALL BE INSTALLED. IF THE APPLICANT DEVIATES FROM THE ROOF SPECIFICATIONS ON SHEET T1.1 THE APPLICANT SHALL PROVIDE A COPY OF THE ICC/UL LISTING

ROOF NOTES (CONT'D)

14. FOR PHOTOVOLTAIC ARRAYS OCCUPYING NOT MORE THAN 33 PERCENT OF THE PLAN VIEW TOTAL ROOF AREA, NOT LESS THAN AN 18-INCH (457 MM) CLEAR SETBACK IS REQUIRED ON BOTH SIDES OF A HORIZONTAL RIDGE. FOR PHOTOVOLTAIC ARRAYS OCCUPYING MORE THAN 33 PERCENT OF THE PLAN VIEW TOTAL ROOF AREA, NOT LESS THAN A 36-INCH (914 MM) CLEAR SETBACK IS REQUIRED ON BOTH SIDES OF A HORIZONTAL RIDGE.
15. PER SECTION R806.5/EM3.9.6:
 a. WHERE ONLY AIR-IMPERMEABLE IS PROVIDED, IT SHALL BE APPLIED IN DIRECT CONTACT WITH UNDERSIDE OF THE STRUCTURAL ROOF SHEATHING.
 b. WHERE AIR-PERMEABLE INSULATION IS INSTALLED DIRECTLY BELOW THE STRUCT. SHEATHING, RIGID BOARD OR SHEET INSULATION SHALL BE INSTALLED DIRECTLY ABOVE THE STRUCTURAL ROOF SHEATHING w/ MIN. R VALUE BASED ON CLIMATE ZONE PER TABLE R806.5.
 c. WHERE BOTH AIR-IMPERMEABLE AND AIR-PERMEABLE INSULATION ARE PROVIDED, THE AIR-IMPERMEABLE INSULATION SHALL BE APPLIED IN DIRECT CONTACT WITH THE UNDERSIDE OF THE STRUCT. ROOF SHEATHING w/ MIN. R VALUE BASED ON CLIMATE ZONE PER TABLE R806.5.FOR CONDENSATION CONTROL.

FLOOR PLAN NOTES

1. ALL DIMENSIONS TO FACE OF STUD, U.N.O.
2. ALL DOORS SHOULD BE 3 1/2" FROM NEAREST INTERSECTING WALL AT HINGED SIDE, U.N.O.
3. WRITTEN DIMENSIONS TO PREVAIL OVER SCALING OF DRAWINGS. CONTRACTOR TO VERIFY ALL DIM. PRIOR TO CONSTRUCTION AND IMMEDIATELY NOTIFY OWNER OF ANY DISCREPANCIES.
4. REFER TO FRAMING PLANS AND SECTIONS FOR CLARIFICATION AND DIM. NOT SHOWN .
5. ALL ROOF DRAIN PIPES TO BE MIN. 2" STORM DRAINAGE SYSTEM UNLESS LOCAL CODE REQUIRES LARGER DRAIN SIZES.
 ROOF GUTTERS:
 STYLE A . INSTALLED AND DESIGNED IN ACCORDANCE WITH SMACNA MANUAL, PLATE #1,#2 & #3,GUTTER. PAGE 6 - 11, WIDTH AS REQUIRED TO HANDLE THE AMOUNT OF ROOF WATER FOR MAXIMUM STORMS, SMACNA CHART #2, PAGE #2.
 GUTTER: SIZE; PAGES 1,2, 3, 4, 5 &6, CHARTS#1,#2,#3,#4,#5#6 & #7
 STYLE; PLATE #2, STYLE A, PAGE 9
 EXPANSION;PLATE #6, PAGE 16 &17
 HANGING; PLATE #19, FIG. C, PAGE 43.
 DOWN SPOUTS:
 PLAIN RECTANGULAR.AS REQUIRED BY SMACNA MANUAL CHART #3, PAGE #3. SEE ARCHITECT FOR LOCATIONS OF DOWN SPOUTS. ALL DOWN SPOUTS ARE TO BE DESIGNED TO HANDLE THE AMOUNT OF ROOF WATER FOR MAXIMUM STORMS, SMACNA CHART #2, PAGE #2. DOWN SPOUTS ARE TO DEPOSIT DIRECTLY OVER A NDS 6 INCH SQUARE, MODEL 641 OR APPROVED EQUAL.(SEE SECTION 02710 MORE INFORMATION)
6. TRANSITION OF FLOOR MATERIALS OCCURRING IN OPENINGS WITH DOORS TO BE LOCATED UNDER THE CENTER OF THE DOOR IN THE CLOSED POSITION. TRANSITION OF FLOOR MATERIAL OCCURRING WITH NO DOOR TO BE LOCATED TO ALIGN WITH THE FACE OF THE PARTITION, U.O.N
7. DIFFUSERS AND GRILLS TO MATCH COLOR OF SURFACE AT WHICH THEY ARE MOUNTED, U.O.N.
8. FLOOR FINISH TO CONTINUE UNDER MILLWORK WHERE FLOOR IS VISIBLE (I.E. TRASH, RECYCLING, ECT.) 8. SILICON SEALANT AT GLAZING TO BE CLEAR, U.O.N.
9. PLUMBING, ELECTRICAL, AND SPRINKLER EQUIPMENT, IF REQUIRED TO BE PAINTED
 TO MATCH COLOR OF ADJACENT SURFACE.
10. ALL FINISH MATERIAL MUST MEET ALL APPLICATION FIRE, LIFE SAFETY, AND BUILDING CODES. 80% OF FLOOR AREA RECEIVING RESILIENT FLOORING SHALL COMPLY WITH SPECIFIED VOC CRITERIA. PARTICLE BOARD, MDF AND PLYWOOD USED IN INTERIOR FINISH SYSTEMS SHALL COMPLY WITH LOW FORMALDEHYDE EMISSION STANDARDS.
11. OPERATION AND MAINTENANCE MANUAL: THE BUILDER IS TO PROVIDE AN OPERATION MANUAL (CONTAINING INFORMATION FOR MAINTAINING APPLIANCES, ETC.) FOR THE OWNER AT THE TIME OF FINAL INSPECTION.
12. WEEP SCREED FOR STUCCO AT THE FOUNDATION PLATE LINE SHALL BE A MIN. OF 4" ABOVE THE EARTH OR 2" ABOVE PAVED AREAS. CRC R703.7.2.1, CBC 2512.1.2
13. FASTENERS AND CONNECTIONS (NAILS, ANCHORS BOLTS ECT) IN CONTACT WITH PRESERVATIVE -TREATED WOOD SHALL BE OF HOT -DIPPED ZINC-COATED GALVANIZED STEEL, STAINLESS STEEL, SILICON BRONZE OR COPPER. (CRC R317.3, CBC 2304.10.5)
14. ANCHOR BOLTS SHALL INCLUDE STEEL PLATE WASHERS A MIN. OF 0.229" X 3" X 3" IN SIZE, BETWEEN SILL PLATE AND NUT. (CRC R602.11.1, CBC 2308.3.2 ACCEPTANCE ALTERNATIVE SDPWS 4.3.6.4.3)
15. FUTURE WATER HEATERS AND PLUMBING FIXTURES SHALL MEET THE REQUIREMENTS OF SECTION 2-5314 AND TABLE 2-53G, TITLE 24, C.A.C.
16. 15, 20 AND 30 AMP. RECEPTACLE OUTLETS SHALL BE INSTALLED NO MORE THAN 48" MEASURED FROM THE TOP OF OUTLET BOX AND NOT LESS THAN 15" FROM THE BOTTOM OF OUTLET BOX ABOVE THE FLOOR.
17. SITE SHALL BE PLANNED AND DEVELOPED TO KEEP SURFACE WATER AWAY FROM BUILDINGS. PLANS SHALL BE APPROVED BY THE CITY ENGINEER THAT SHOW SITE GRADING AND PROVIDE FOR STORM WATER RETENTION AND DRAINAGE DURING CONSTRUCTION. BMP'S THAT ARE CURRENTLY ENFORCED BY THE CITY ENGINEER MUST BE IMPLEMENTED PRIOR TO INITIAL INSPECTION BY THE BUILDING DEPT.
18. 65 % OF CONSTRUCTION WASTE IS TO BE RECYCLED AND 100% OF INERT MATERIALS ARE RECYCLED SALVAGED,COMPOSTED .

FLOOR PLAN NOTES (CONT'D)

19. VOC'S MUST COMPLY WITH THE LIMITATION LISTED IN SECTION 4.504.3 AND TABLES 4.504.1, 4.504.2, 4.504.3, AND 4.504.4 FOR: ADHESIVES, PAINTS,STAINS, CAULKS AND COATINGS, CARPET AND COMPOSITION WOOD PRODUCTS.DOCUMENTATION SHALL BE PROVIDED TO VERIFY THAT COMPLIANT VOC LIMIT FINISHED MATERIALS HAVE BEEN USED.
20. INTERIOR MOISTURE CONTROL AT SLAB ON GRADE FLOORS SHALL BE PROVIDED BY THE SOIL ENGINEER. IF A SOIL ENGINEER HAS NOT PREPARED A SOIL REPORT FOR THIS PROJECT, THE FOLLOWING IS REQUIRED: A 4" THICK BASE OF 1/2" OR LARGER CLEAN AGGREGATE SHALL BE PROVIDED WITH A VAPOR BARRIER IN DIRECT CONTACT WITH CONCRETE, WITH A CONCRETE MIX DESIGN WHICH WILL ADDRESS BLEEDING, SHRINKAGE AND CURLING SHALL BE USED.
21. MOISTURE CONTENT OF WOOD SHALL NOT EXCEED 19% BEFORE IT IS ENCLOSED IN CONSTRUCTION. THE MOISTURE CONTENT NEEDS TO BE CERTIFIED BY ONE OF 3 METHODS SPECIFIED. BUILDING MATERIAL WITH VISIBLE SIGNS OF WATER DAMAGE SHOULD NOT BE USED IN CONSTRUCTION. THE MOISTURE CONTENT MUST BE DETERMINED BY THE CONTRACTOR BY ONE OF THE LISTED METHODS LISTED IN CGC SECTION 4.505.3
22. PRIOR TO FINAL APPROVAL OF THE BUILDING THE LICENSED CONTRACTOR, ARCHITECT OR ENGINEER IN RESPONSIBLE CHARGE OF THE OVERALL CONSTRUCTION MUST COMPLETE AND SIGN THE GREEN BUILDING STANDARDS CERTIFICATION FORM AND GIVEN TO THE BUILDING DEPT OFFICIAL TO BE FILED WITH THE APPROVED PLANS
23. LANDSCAPE IRRIGATION WATER USE SHALL HAVE WEATHER BASED CONTROLLERS.
24. PROJECTS WHICH DISTURB LESS THAN ONE ACRE OF SOIL SHALL MANAGE STORM WATER DRAINAGE DURING CONSTRUCTION BY ONE OF THE FOLLOWING: A. RETENTION BASIN. B. WHERE STORM WATER IS CONVEYED TO A PUBLIC DRAINAGE SYSTEM, WATER SHALL BE FILTERED BY USE OF A BARRIER SYSTEM, WATTLE OR OTHER APPROVED METHOD. CGC 4.106.2.
25. THE CONTRACTOR SHALL SUBMIT A CONSTRUCTION WASTE MANAGEMENT PLAN TO THE JURISDICTION AGENCY THAT REGULATES WASTE MANAGEMENT, PER CGC 4.408.2.
26. THE BUILDER IS TO PROVIDE AN OPERATION MANUAL (CONTAINING INFORMATION FORM MAINTAINING APPLIANCES, ETC.) FOR THE OWNER AT THE TIME OF FINAL INSPECTION. CGC 4.410.0
27. DURING CONSTRUCTION, ENDS OF DUCT OPENINGS ARE TO BE SEALED, AND MECHANICAL EQUIPMENT IS TO BE COVERED. CGC 4.504.1
28. BATHROOM FANS SHALL BE ENERGY STAR RATED, VENTED DIRECTLY TO THE OUTSIDE AND CONTROLLED BY A HUMIDISTAT.
29. SPECIAL INSPECTORS EMPLOYED BY THE ENFORCING AGENCY MUST BE QUALIFIED AND ABEL TO DEMONSTRATE COMPETENCE IN THE DISCIPLINE THEY ARE INSPECTING.
30. VERIFICATION OF COMPLIANCE WITH THIS CODE MAY INCLUDE CONSTRUCTION DOC. PLANS, SPECIFICATION BUILDER OR INSTALLER CERTIFICATIONS, INSPECTIONS REPORTS, OR OTHER METHODS ACCEPTABLE TO THE ENFORCING AGENCY WHICH TO SHOW SUBSTANTIAL CONFORMATION.
31. NEW SINGLE FAMILY RESIDENTIAL CONSTRUCTION SHALL BE DESIGNED FOR AGING-IN-PLACE DESIGN AND FALL PREVENTION PER R327 SEE SHEET A5.3 FOR AGING IN PLACE DETAILS
 A) AT LEAST ONE BATHROOM ON THE ENTRY LEVEL SHALL BE PROVIDED WITH REINFORCEMENT INSTALLED. WHERE THERE IS NO BATHROOM ON THE ENTRY LEVEL, AT LEAST ONE BATHROOM ON THE SECOND OR THIRD FLOOR OF THE DWELLING SHALL COMPLY WITH THIS SECTION.
 B) REINFORCEMENT SHALL BE SOLID LUMBER OR OTHER CONSTRUCTION MATERIALS APPROVED BY THE ENFORCING AGENCY.
 C) REINFORCEMENT SHALL NOT BE LESS THAN 2 BY 8 INCH NOMINAL LUMBER. REINFORCEMENT SHALL BE LOCATED BETWEEN 32 INCHES AND 39-1/4 INCHES ABOVE THE FINISHED FLOOR FLUSH WITH THE WALL FRAMING.
 D) WATER CLOSET REINFORCEMENT SHALL BE INSTALLED ON BOTH SIDE WALLS OF THE FIXTURE, OR ONE SIDE WALL AND THE BACK WALL.
 E) SHOWER REINFORCEMENT SHALL BE CONTINUOUS WHERE WALL FRAMING IS PROVIDED.
 F) BATHTUB AND COMBINATION BATHTUB/SHOWER REINFORCEMENT SHALL BE CONTINUOUS ON EACH END OF THE BATHTUB AND THE BACK WALL. ADDITIONALLY, BACK WALL REINFORCEMENT FOR A LOWER GRAB BAR SHALL BE PROVIDED WITH THE BOTTOM EDGE LOCATED NO MORE THAN 6 INCHES ABOVE THE BATHTUB RIM.

MECHANICAL NOTES

1. CARBON MONOXIDE ALARMS SHALL BE INTERCONNECTED IN SUCH A MANNER THAT THE ACTUATION OF ONE ALARM WILL ACTIVATE ALL OF THE ALARMS IN THE INDIVIDUAL DWELLING UNIT. [CRC R315.5] CARBON MONOXIDE ALARMS SHALL RECEIVE THEIR PRIMARY POWER FROM THE BUILDING WIRING WHERE SUCH WIRING IS SERVED FROM A COMMERCIAL SOURCE AND, WHERE PRIMARY POWER IS INTERRUPTED, SHALL RECEIVE POWER FROM A BATTERY. WIRING SHALL BE PERMANENT AND WITHOUT A DISCONNECTING SWITCH OTHER THAN THOSE REQUIRED FOR OVERCURRENT PROTECTION. [CRC R315.6]
2. WHERE WATER CLOSET COMPARTMENT IS INDEPENDENT OF THE BATHROOM OR SHOWER AREA, A FAN WILL BE REQ. IN EACH AREA. BATHROOMS SHALL HAVE AN EXHAUST FAN WITH HUMIDITY CONTROL SENSOR, MIN. 50 CFM CAPACITY. (CRC R303.3.1)
3. ROOMS CONTAINING BATHTUBS, SHOWERS, SPAS AND SIMILAR FIXTURES SHALL BE PROVIDED WITH AN EXHAUST FAN WITH HUMIDITY CONTROL SENSOR HAVING A MIN. CAPACITY OF 50 CFM DUCTED TO TERMINATE OUTSIDE THE BLDG. (CRC R303.3, CAL GREEN 4.505.1, CBC 1203 .5.2.1, CMC 402.5
4. SUPPLY AND RETURN AIR DUCTS TO BE INSULATED AT A MIN. OF R-6. (CAL ENERGY CODE TABLE 150.1-A)

MECHANICAL NOTES (CONT'D)

5. WHERE WHOLE HOUSE FANS ARE USED IN BATHROOM AREAS, THE FAN MUST RUN CONTINUOUSLY AND SHALL NOT BE TIED TO HUMIDITY CONTROL SENSOR. (CAL GREEN 4.506.1)
6. ENVIRONMENTAL AIR DUCTS SHALL TERMINATE MIN. 3 FEET FROM PROPERTY LINE OR OPENINGS INTO BLDG., AND 10' FROM A FORCED AIR INLET. (CMC 502.2.1)
7. ALL HOSE BIBS ARE TO HAVE VACUUM BREAKERS. (CPC603.5.7)
8. THE MAX. AMOUNT OF WATER CLOSETS ON A 3" HORIZONTAL DRAINAGE SYSTEM LINE IS 5 (CPC TABLE 703.2)
9. THE MAX. AMOUNT OF WATER CLOSETS ON A 3" VERTICAL DRAINAGE LINE IS 5. (CPC TABLE 703.2)
10. PROVIDE GAS LINES WITH A MN. CAPACITY OF 200,000BTU FOR WATER HEATER. (CAL ENERGY CODE 150.0(N)).
11. PROVIDE A CONDENSATE DRAIN NO MORE THAN 2" ABOVE THE BASE OF THE WATER HEATER SPACE. (CAL ENERGY CODE 150.0 (N).
12. INSULATE ALL HOT WATER PIPES. CAL ENERGY CODE 150.0(j) (2), and CPC 609.11)
13. ISOLATION VALVES ARE REQ. FOR TANKLESS WATER HEATERS ON THE HOT AND COLD SUPPLY LINES WITH HOSE BIBS ON EACH VALVE, TO FLUSH THE HEAT EXCHANGER. (CAL ENERGY CODE 110.3(7).
14. EXHAUST DUCTS AND DRYER VENTS SHALL BE EQUIPPED WITH BACK DRAFT DAMPERS
15. ALL EXHAUST FANS SHALL BE SWITCHED SEPARATELY FROM LIGHTING SYSTEMS. (CENC 150(K) 2B)
16. PLUMBING FIXTURES AND FITTINGS INSTALLED IN RESIDENTIAL BUILDINGS SHALL COMPLY WITH THE PRESCRIPTIVE REQ. OF SECTIONS 4.303.1.1 THROUGH 4.303.1.4.4.
17. PLUMBING FIXTURES AND FITTINGS REQ. IN SECTION 4.303.1 SHALL BE INSTALLED IN ACCORDANCE WITH THE CALIFORNIA PLUMBING CODE AND SHALL MEET THE THE APPLICABLE REFERENCE STANDARDS.
18. ALL HOSE CONNECTIONS SHALL BE EQUIPPED WITH NON-REMOVABLE BACK FLOW PREVENTERS. [CPC 603.3.3]

ELECTRICAL NOTES

1. RECEPTACLE OUTLET LOCATIONS WILL COMPLY WITH CEC ARTICLE 210.52. & CRC SECTION R327.1.2. TAMPER RESISTANT RECEPTACLE OUTLET LOCATIONS SHALL COMPLY W/ NEC ART. 210-52 AND 550.13 (I.E. ALL RECEPTACLES IN A DWELLING).
2. ARC-FAULT PROTECTION FOR ALL OUTLETS (NOT JUST RECEPTACLES) LOCATED IN ROOMS DESCRIBED IN NEC 210.12(A): KITCHENS, LAUNDRY AREAS, FAMILY, LIVING, BEDROOMS, DINING, HALLS, ETC. ALL BRANCH CIRCUITS WILL BE ARC FAULT CIRCUIT PROTECTED PER NEC ART. 210-12(B). THERE ARE TO BE A MINIMUM OF 2 SMALL APPLIANCE BRANCH CIRCUITS WITHIN THESE AREAS CEC 210.11(C)1
3. BATHROOM CIRCUITING SHALL BE EITHER: a) A 20 AMPERE CIRCUIT DEDICATED TO EACH BATHROOM.
 b) AT LEAST ONE 20 AMPERE CIRCUIT SUPPLYING ONLY BATHROOM RECEPTACLE OUTLETS PER NEC ART. 210-11(c)3.
4. ALL 125-VOLT, SINGLE-PHASE, 15- AND 20- AMP RECEPTACLES INSTALLED IN BATHROOMS, GARAGES, BASEMENTS, OUTDOORS, LAUNDRY AREA, KITCHEN DISHWASHERS, KITCHEN COUNTERS AND AT WET BAR SINKS, WITHIN 6' OF A SINK, SHALL BE GFCI PROTECTED PER NEC ART. 210-8(A).
5. WEATHER RESISTANT TYPE FOR RECEPTACLES INSTALLED IN DAMP OR WET LOCATIONS (OUTSIDE) NEC 406.4(D)(6)
6. PER LIGHTING MEASURES 150(K)4 N T-24, THE BEDROOMS, HALLWAY, LIVING ROOM AND OFFICE ARE REQUIRED TO HAVE ANY INSTALLED FIXTURE TO BE ON A DIMMER SWITCH OR THE FIXTURE NEEDS TO BE HIGH EFFICACY.
7. OUTDOOR LIGHTING FIXTURES ARE REQUIRED TO BE HIGH EFFICACY OR CONTROLLED BY A COMBINATION PHOTOCONTROL / MOTION SENSOR.
8. A RECEPTACLE OUTLET MUST BE INSTALLED IN EVERY ROOM SO THAT NO POINT ALONG THE WALL SPACE IS MORE THAN 6 FEET, MEASURED HORIZONTALLY ALONG THE FLOOR LINE FROM A RECEPTACLE OUTLET CEC 210.52(A)
9. SMOKE DETECTORS MUST BE PERMANENTLY WIRED. IN NEW CONSTRUCTION, REQUIRED SMOKE ALARMS SHALL RECEIVE THEIR PRIMARY POWER FROM THE BUILDING WIRING WHERE SUCH WIRING IS SERVED FROM A COMMERCIAL SOURCE AND SHALL BE EQUIPPED WITH A BATTERY BACK-UP. SMOKE ALARMS SHALL EMIT A SIGNAL WHEN THE BATTERIES ARE LOW. WIRING SHALL BE PERMANENT AND WITHOUT A DISCONNECTING SWITCH OTHER THAN AS REQUIRED FOR OVERCURRENT PROTECTION.
10. WHERE MORE THAN ONE SMOKE ALARM IS REQUIRED TO BE INSTALLED, THE SMOKE ALARMS SHALL BE INTERCONNECTED IN SUCH A MANNER THAT THE ACTIVATION OF ONE ALARM WILL ACTIVATE ALL THE ALARMS IN THE INDIVIDUAL DWELLING UNIT. THE ALARM SHALL BE CLEARLY AUDIBLE IN ALL BEDROOMS OVER BACKGROUND NOISE LEVELS WITH ALL INTERVENING DOORS CLOSED.
11. ALL EXHAUST FANS SHALL BE SWITCHED SEPARATELY FROM LIGHTING SYSTEMS. (CENC 150(K) 2B)
12. A MINIMUM OF 1 LUMINAIRE SHALL BE INSTALLED IN BATHROOM CONTROLLED BY AN OCCUPANT OR VACANCY SENSOR PROVIDING AUTOMATIC -OFF FUNCTIONALLY (CENC 150 .0(K)21)
13. LAUNDRY AREA SHALL AT LEAST 1-20 AMP DEDICATED BRANCH CIRCUIT (CEC 210 .11 (C)(2)
14. PROVIDE A DEDICATED CIRCUIT FOR THE A.C./FAU (CEC 422.12)
15. TWO OR MORE SMALL-APPLIANCE 20-AMPERE BRANCH CIRCUITS SHALL BE PROVIDED FOR RECEPTACLES INSTALLED IN A KITCHEN TO SERVE COUNTERTOP SURFACES. [CEC 210.52(B)(3) & CEC 210.11(C)(1)] IN DWELLING UNITS IN ALL AREAS SPECIFIED IN 210.52, ALL 15- AND 20-AMPERE, 125- AND 250-VOLT NONLOCKING-TYPE RECEPTACLES SHALL BE LISTED TAMPER-RESISTANT RECEPTACLES. [CEC 406.12]

ELECTRICAL NOTES (CONT'D)

16. PER CEC 2022 150.0(N).1.A.:
 IF THE DESIGNATED SPACE IS WITHIN 3 FEET FROM THE WATER HEATER, THEN THIS SPACE SHALL INCLUDE THE FOLLOWING:A DEDICATED 125 VOLT, 20 AMP ELECTRICAL RECEPTACLE THAT IS CONNECTED TO THE ELECTRIC PANEL WITH A 120/240 VOLT 3 CONDUCTOR, 10 AWG COPPER BRANCH CIRCUIT, WITHIN 3 FEET FROM THE WATER HEATER AND ACCESSIBLE TO THE WATER HEATER WITH NO OBSTRUCTIONS; AND
 - BOTH ENDS OF THE UNUSED CONDUCTOR SHALL BE LABELED WITH THE WORD "SPARE" AND BE ELECTRICALLY ISOLATED; AND
 - A RESERVED SINGLE POLE CIRCUIT BREAKER SPACE IN THE ELECTRICAL PANEL ADJACENT TO THE CIRCUIT BREAKER FOR THE BRANCH CIRCUIT IN A ABOVE AND LABELED WITH THE WORDS "FUTURE 240V USE"; AND
 - A CONDENSATE DRAIN THAT IS NO MORE THAN 2 INCHES HIGHER THAN THE BASE OF THE INSTALLED WATER HEATER, AND ALLOWS NATURAL DRAINING WITHOUT PUMP ASSISTANCE.
17. ELECTRICAL RECEPTACLE OUTLETS IN BATHROOM MUST BE NO MORE THAN 48 INCHES OR LESS THAN 15-INCHES MEASURE FROM THE FINISHED FLOOR.
18. DOORBELL BUTTON MUST BE INSTALLED NO MORE THAN 48 INCHES FROM EXTERIOR FLOOR.
19. LUMINAIRE EFFICACY - ALL INSTALLED LUMINAIRES SHALL MEET THE REQUIREMENTS OF 2022 BUILDING ENERGY EFFICIENCY STANDARDS TABLE 150.0-A PER SECTION 150.0(K).

ELECTRIC READY NOTES:
2022 ENERGY EFFICIENCY STANDARDS 150.0

(S) ENERGY STORAGE SYSTEMS (ESS) READY. ALL SINGLE-FAMILY RESIDENCES THAT INCLUDE ONE OR TWO DWELLING UNITS SHALL MEET THE FOLLOWING. ALL ELECTRICAL COMPONENTS SHALL BE INSTALLED IN ACCORDANCE WITH THE CALIFORNIA ELECTRICAL CODE:
1. AT LEAST ONE OF THE FOLLOWING SHALL BE PROVIDED:
 A. ESS READY INTERCONNECTION EQUIPMENT WITH A MINIMUM BACKED-UP CAPACITY OF 60 AMPS AND A MINIMUM OF FOUR ESS-SUPPLIED BRANCH CIRCUITS, OR
 B. A DEDICATED RACEWAY FROM THE MAIN SERVICE TO A PANELBOARD (SUBPANEL) THAT SUPPLIES THE BRANCH CIRCUITS IN SECTION 150.0(S)(2). ALL BRANCH CIRCUITS ARE PERMITTED TO BE SUPPLIED BY THE MAIN SERVICE PANEL PRIOR TO THE INSTALLATION OF AN ESS. THE TRADE SIZE OF THE RACEWAY SHALL BE NOT LESS THAN ONE INCH. THE PANELBOARD THAT SUPPLIES THE BRANCH CIRCUITS (SUBPANEL) MUST BE LABELED "SUBPANEL SHALL INCLUDE ALL BACKED-UP LOAD CIRCUITS."
2. A MINIMUM OF FOUR BRANCH CIRCUITS SHALL BE IDENTIFIED AND HAVE THEIR SOURCE OF SUPPLY COLLOCATED AT A SINGLE PANELBOARD SUITABLE TO BE SUPPLIED BY THE ESS. AT LEAST ONE CIRCUIT SHALL SUPPLY THE REFRIGERATOR, ONE LIGHTING CIRCUIT SHALL BE LOCATED NEAR THE PRIMARY EGRESS, AND AT LEAST ONE CIRCUIT SHALL SUPPLY A SLEEPING ROOM RECEPTACLE OUTLET.
3. THE MAIN PANELBOARD SHALL HAVE A MINIMUM BUSBAR RATING OF 225 AMPS.
4. SUFFICIENT SPACE SHALL BE RESERVED TO ALLOW FUTURE INSTALLATION OF A SYSTEM ISOLATION EQUIPMENT/TRANSFER SWITCH WITHIN 3 FEET OF THE MAIN PANELBOARD. RACEWAYS SHALL BE INSTALLED BETWEEN THE PANELBOARD AND THE SYSTEM ISOLATION EQUIPMENT/TRANSFER SWITCH LOCATION TO ALLOW THE CONNECTION OF BACKUP POWER SOURCE.

(T) HEAT PUMP SPACE HEATER READY. SYSTEMS USING GAS OR PROPANE FURNACE TO SERVE INDIVIDUAL DWELLING UNITS SHALL INCLUDE THE FOLLOWING:
1. A DEDICATED 240 VOLT BRANCH CIRCUIT WIRING SHALL BE INSTALLED WITHIN 3 FEET FROM THE FURNACE AND ACCESSIBLE TO THE FURNACE WITH NO OBSTRUCTIONS. THE BRANCH CIRCUIT CONDUCTORS SHALL BE RATED AT 30 AMPS MINIMUM. THE BLANK COVER SHALL BE IDENTIFIED AS "240V READY." ALL ELECTRICAL COMPONENTS SHALL BE INSTALLED IN ACCORDANCE WITH THE CALIFORNIA ELECTRICAL CODE.
2. THE MAIN ELECTRICAL SERVICE PANEL SHALL HAVE A RESERVED SPACE TO ALLOW FOR THE INSTALLATION OF A DOUBLE POLE CIRCUIT BREAKER FOR A FUTURE HEAT PUMP SPACE HEATER INSTALLATION. THE RESERVED SPACE SHALL BE PERMANENTLY MARKED AS "FOR FUTURE 240V USE."

(U) ELECTRIC COOKTOP READY. SYSTEMS USING GAS OR PROPANE COOKTOP TO SERVE INDIVIDUAL DWELLING UNITS SHALL INCLUDE THE FOLLOWING:
1. A DEDICATED 240 VOLT BRANCH CIRCUIT WIRING SHALL BE INSTALLED WITHIN 3 FEET FROM THE COOKTOP AND ACCESSIBLE TO THE COOKTOP WITH NO OBSTRUCTIONS. THE BRANCH CIRCUIT CONDUCTORS SHALL BE RATED AT 50 AMPS MINIMUM. THE BLANK COVER SHALL BE IDENTIFIED AS "240V READY." ALL ELECTRICAL COMPONENTS SHALL BE INSTALLED IN ACCORDANCE WITH THE CALIFORNIA ELECTRICAL CODE.
2. THE MAIN ELECTRICAL SERVICE PANEL SHALL HAVE A RESERVED SPACE TO ALLOW FOR THE INSTALLATION OF A DOUBLE POLE CIRCUIT BREAKER FOR A FUTURE ELECTRIC COOKTOP INSTALLATION. THE RESERVED SPACE SHALL BE PERMANENTLY MARKED AS "FOR FUTURE 240V USE."

(V) ELECTRIC CLOTHES DRYER READY. CLOTHES DRYER LOCATIONS WITH GAS OR PROPANE PLUMBING TO SERVE INDIVIDUAL DWELLING UNITS SHALL INCLUDE THE FOLLOWING:
1. A DEDICATED 240 VOLT BRANCH CIRCUIT WIRING SHALL BE INSTALLED WITHIN 3 FEET FROM THE CLOTHES DRYER LOCATION AND ACCESSIBLE TO THE CLOTHES DRYER LOCATION WITH NO OBSTRUCTIONS. THE BRANCH CIRCUIT CONDUCTORS SHALL BE RATED AT 30 AMPS MINIMUM. THE BLANK COVER SHALL BE IDENTIFIED AS "240V READY." ALL ELECTRICAL COMPONENTS SHALL BE INSTALLED IN ACCORDANCE WITH THE CALIFORNIA ELECTRICAL CODE.
2. THE MAIN ELECTRICAL SERVICE PANEL SHALL HAVE A RESERVED SPACE TO ALLOW FOR THE INSTALLATION OF A DOUBLE POLE CIRCUIT BREAKER FOR A FUTURE ELECTRIC CLOTHES DRYER INSTALLATION. THE RESERVED SPACE SHALL BE PERMANENTLY MARKED AS "FOR FUTURE 240V USE."

FOR USE IN THE CITY OF PERRIS

DESIGN PATH STUDIO
architecture + engineering + planning
DESIGNPATHSTUDIO.COM

BY USING THESE PERMIT READY CONSTRUCTION DOCUMENTS, THE RECIPIENT ACKNOWLEDGES, ACCEPTS AND VOLUNTARILY AFFIRMS THE FOLLOWING CONDITIONS:
1. THE USE OF THIS INFORMATION IS RESTRICTED TO THE ORIGINAL PROJECT FOR WHICH IT WAS PREPARED FOR THE PERMIT READY ACCESSORY DWELLING UNIT (ADU) PROGRAM FOR THE CITY OF PERRIS ONLY. THIS IS A LIMITED SET OF STANDARDIZED ADU PLANS AND SPECIFICATIONS APPROVED BY THE CITY OF PERRIS BUILDING DEPARTMENT. BUILDING CODES DO CHANGE OVER TIME AND RECIPIENT SHALL ENSURE FULL COMPLIANCE UNDER ALL CODES THEN IN EFFECT AT THE TIME OF THE SUBJECT PERMIT. THIS DOES NOT ELIMINATE OR REDUCE THE RECIPIENT'S RESPONSIBILITY TO VERIFY ANY AND ALL INFORMATION RELEVANT TO THE RECIPIENT'S WORK AND RESPONSIBILITY ON THIS PROJECT. DESIGN PATH STUDIO SHALL NOT BE RESPONSIBLE FOR TRANSLATION ERRORS. DO NOT USE THESE CONSTRUCTION DOCUMENTS IF THE PERMIT HAS EXPIRED OR IS REVOKED AT ALL.
2. THE RECIPIENT RECOGNIZES AND ACKNOWLEDGES THAT THE USE OF THIS INFORMATION WILL BE AT THEIR SOLE RISK AND WITHOUT ANY LIABILITY OR LEGAL EXPOSURE TO DESIGN PATH STUDIO. NO WARRANTIES OF ANY NATURE, WHETHER EXPRESS OR IMPLIED, SHALL ATTACH TO THESE DOCUMENTS AND THE INFORMATION CONTAINED THEREON. ANY USE, REUSE, OR ALTERATION OF THESE DOCUMENTS BY THE RECIPIENT OR BY OTHERS WILL BE AT THE RECIPIENT'S RISK AND FULL LEGAL RESPONSIBILITY. FURTHERMORE, THE RECIPIENT WILL, TO THE FULLEST EXTENT PERMITTED BY LAW, DEFEND, INDEMNIFY AND HOLD DESIGN PATH STUDIO AND ITS ARCHITECTS HARMLESS FROM ANY AND ALL CLAIMS, SUITS, LIABILITY, DEMANDS, JUDGMENTS, OR COSTS ARISING OUT OF OR RESULTING THERE FROM ANY USE OF THESE CONSTRUCTION DOCUMENTS FOR OR ON ACCOUNT OF ANY INJURY, DEATH, DAMAGE OR LOSS TO PERSONS OR PROPERTY, DIRECT OR CONSEQUENTIAL DAMAGES IN ANY AMOUNT. THIS INDEMNITY DOES NOT APPLY TO THE SOLE NEGLIGENCE OR WILLFUL MISCONDUCT OF DESIGN PATH STUDIO OR ITS ARCHITECTS.
3. THE DESIGNS REPRESENTED BY THESE PLANS ARE COPYRIGHTED AND ARE SUBJECT TO COPYRIGHT PROTECTION.
4. IF THE RECIPIENT DOES NOT AGREE WITH THE ABOVE CONDITIONS, DO NOT PROCEED WITH CONSTRUCTION OF AN ADU OR OTHER IMPROVEMENT UNDER THESE PLANS AT ALL.

project
City of Perris
Pre-Approved
ADU Program

revisions
01

description
General
Notes

date 4 April 2025
project no. PERRIS PRADU
drawn by DESIGN PATH STUDIO
sheet no. G0.3

VERY HIGH FIRE SEVERITY ZONE (VHFSZ) NOTES

GENERAL NOTE:
THE ADU SHALL COMPLY WITH R337 OF THE CURRENT CALIFORNIA RESIDENTIAL CODE IF IT IS IN THE VHFHSZ.
STRUCTURES IN THE VERY HIGH FIRE HAZARD SEVERITY ZONE SHALL PROVIDE & MAINTAIN A FUEL MODIFICATION ZONE. FUEL MODIFICATION ZONES: THE APPLICANT SHALL PROVIDE AND MAINTAIN FIRE/FUEL BREAKS TO THE SATISFACTION OF THE COUNTY'S FIRE DEPARTMENT. FIRE/FUEL BREAK SIZE (MINIMUM 100 FEET FROM STRUCTURE) & COMPOSITION SHALL BE DETERMINED BY THE FIRE DEPARTMENT & SHOWN ON THE IMPROVEMENT/GRADING PLANS, FINAL MAP, & BUILDING PLANS

SECTION R337 - MATERIALS AND CONSTRUCTION METHODS FOR EXTERIOR WILDFIRE EXPOSURE
METHODS FOR EXTERIOR WILDLIFE EXPOSURE
IF THE PROPERTY THAT WILL CONTAIN THE ADU IS IN THE VERY HIGH FIRE HAZARD SEVERITY ZONE THESE NOTES SHALL APPLY. THE JURISDICTION HAS DETERMINED THAT THIS PROJECT IS IN A WILDLIFE -URBAN INTERFACE AREA. PLEASE SHOW COMPLIANCE WITH THE FOLLOWING ITEMS FOR NEW BUILDINGS, PER THE 2022 CRC.
EXCEPTIONS:

1. BUILDINGS OF AN ACCESSORY CHARACTER CLASSIFIED AS A GROUP U OCCUPANCY AND NOT EXCEEDING 120 SQUARE FEET IN FLOOR AREA. WHEN LOCATED AT LEAST 30 FEET FROM AN APPLICABLE BUILDING.
2. BUILDINGS OF AN ACCESSORY CHARACTER CLASSIFIES AS A GROUP U OCCUPANCY OF ANY SIZE LOCATED LEAST 50' FROM AN APPLICABLE BUILDING.
3. BUILDINGS CLASSIFIED AS A GROUP U AGRICULTURE BUILDING. AS DEFINED IN SECTION 202 OF THE CODE (SEE ALSO APPENDIX C - GROUP U AGRICULTURE BUILDINGS), WHEN LOCATED AT LEAST 50' FROM AN APPLICABLE BUILDING.

REQUIREMENTS:

1. R337.5.2 ROOF COVERINGS. WHERE THE ROOF PROFILE HAS AN AIRSPACE UNDER THE ROOF COVERING, INSTALLED OVER A COMBUSTIBLE DECK, A 72 LB. (32.7 KG) CAP SHEET COMPLYING WITH ASTM D3909 STANDARD SPECIFICATION FOR "ASPHALT ROLLED ROOFING (GLASS FELT) SURFACED WITH MINERAL GRANULES," SHALL BE INSTALLED OVER THE ROOF DECK. BIRD STOPS SHALL BE USED AT THE EAVES WHEN THE PROFILE FITS. TO PREVENT DEBRIS AT THE EAVE. HIP AND RIDGE CAPS SHALL BE MUDDED IN TO PREVENT INTRUSION OF FIRE OR EMBERS. <u>EXCEPTION</u>: CAP SHEET IS NOT REQUIRED WHEN NO LESS THAN 1" OF MINERAL WOOL BOARD OR OTHER NONCOMBUSTIBLE MATERIAL IS LOCATED BETWEEN THE ROOFING MATERIAL AND WOOD FRAMING OR DECK. ALTERNATELY, A CLASS A FIRE RATED ROOF UNDERLAYMENT, TESTED IN ACCORDANCE WITH ASTM E108, SHALL BE PERMITTED TO BE USED. IF THE SHEATHING CONSISTS OF EXTERIOR FIRE-RETARDANT TREATED WOOD, THE UNDERLAYMENT SHALL NOT BE REQUIRED TO COMPLY WITH A CLASS A CLASSIFICATION. BIRD STOPS SHALL BE USED AT THE EAVES WHEN THE PROFILE FITS, TO PREVENT DEBRIS AT THE EAVE. HIP AND RIDGE CAPS SHALL BE MUDDED IN TO PREVENT INTRUSION OF FIRE OR EMBERS.
2. R337.5.3 ROOF VALLEYS. WHERE VALLEY FLASHING IS INSTALLED, THE FLASHING SHALL BE NOT LESS THAN 0.019-INCH NO. 26 GAGE GALVANIZED SHEET CORROSION-RESISTANT METAL INSTALLED OVER NOT LESS THAN ONE LAYER OF MIN. 72 POUND MINERAL - SURFACED NON PERFORATED CAP SHEET COMPLYING WITH ASTM D 3909. AT LEAST 36-INCH -WIDE RUNNING THE FULL LENGTH OF THE VALLEY.
3. R337.5.4 ROOF GUTTER. ROOF GUTTERS SHALL BE PROVIDED WITH THE MEANS TO PREVENT THE ACCUMULATION OF LEAVES AND DEBRIS IN THE GUTTER.
4. R337.6 VENTILATION OPENINGS SHALL BE FULLY COVERED WITH WILDFIRE FLAME AND EMBER RESISTANT VENTS APPROVED AND LISTED BY THE CALIFORNIA STATE FIRE MARSHAL, OR WUI VENTS TESTED TO ASTM E2886 AND LISTED, BY COMPLYING WITH ALL OF THE FOLLOWING REQUIREMENTS:
   A) THERE SHALL BE NO FLAMING IGNITION OF THE COTTON MATERIAL DURING THE EMBER INTRUSION TEST
   B) THERE SHALL BE NO FLAMING IGNITION DURING THE INTEGRITY TEST PORTION OF THE FLAME INTRUSION TEST
   C) THE MAXIMUM TEMPERATURE OF THE UNEXPOSED SIDE OF THE VENT SHALL NOT EXCEED 662 F
5. R337.6.2.1 VENTS THAT ARE INSTALLED ON A SLOPED ROOF, SUCH AS DORMER VENTS, SHALL COMPLY WITH ALL THE FOLLOWING
   A) VENTS SHALL BE COVERED WITH A MESH WHERE THE DIMENSIONS OF THE MESH THEREIN SHALL BE A MINIMUM OF $\frac{1}{16}$ - INCH AND SHALL NOT EXCEED $\frac{1}{8}$ - INCH IN DIAMETER
   B) THE MESH MATERIAL SHALL BE NONCOMBUSTIBLE
   C) THE MESH MATERIAL SHALL BE CORROSION RESISTANT.
6. R337.7.3 EXTERIOR WALLS COVERINGS. THE EXTERIOR WALL COVERING SHALL COMPLY WITH ONE OR MORE OF THE FOLLOWING REQUIREMENTS, EXCEPT AS PERMITTED FOR EXTERIOR WALL ASSEMBLIES COMPLYING WITH SECTION R337.7.4: PLEASE SEE SHEET A5.1 DETAILS 9B, 12B, AND 15B FOR FIRE RATED WALL ASSEMBLIES.
   1. NONCOMBUSTIBLE MATERIAL
   2. IGNITION- RESISTANT MATERIAL. THE IGNITION-RESISTANT MATERIAL SHALL BE LABELED FOR EXTERIOR USE AND SHALL MEET THE REQUIREMENTS OF SECTION R337.4.2.
   3. FIRE-RETARDANT-TREATED WOOD. THE FIRE-RETARDANT-TREATED WOOD SHALL BE LABELED FOR EXTERIOR USE AND SHALL MEET THE REQUIREMENTS OF SECTION 2303.2.
7. R337.7.3.1 EXTENT OF EXTERIOR WALL COVERING. EXTERIOR WALL COVERINGS SHALL EXTEND FROM THE TOP OF THE FOUNDATION TO THE ROOF AND TERMINATE AT 2" NOMINAL SOLID WOOD BLOCKING BETWEEN RAFTERS AT ALL ROOF OVERHANGS, OR IN THE CASE OF ENCLOSED EAVES, TERMINATE AT THE ENCLOSURE.
8. R337.7.4 EXTERIOR WALL ASSEMBLIES. EXTERIOR WALL ASSEMBLIES OF BUILDINGS OR STRUCTURES SHALL BE CONSTRUCTED USING ONE OR MORE OF THE FOLLOWING METHODS, UNLESS THEY ARE COVERED BY AN EXTERIOR WALL COVERING COMPLYING WITH SECTION R337.7.3:
   1. ASSEMBLY OF SAWN LUMBER OR GLUE LAMINATED WOOD WITH THE SMALLEST MINIMUM NOMINAL DIMENSION OF 4 INCHES. SAWN OR GLUE-LAMINATED PLANKS SPLINED, TONGUE-AND-GROVE , OR SET CLOSE TOGETHER AND WELL SPIKED.
   2. LOG WALL CONSTRUCTION ASSEMBLY
   3. ASSEMBLY THAT HAS BEEN TESTED IN ACCORDANCE WITH THE TEST PROCEDURES FOR A 10 MINUTE DIRECT FLAME CONTACT EXPOSURE SET FORTH IN ASTM E2707 WITH THE CONDITIONS OF ACCEPTANCE SHOWN IN SECTION R337.7.4.1.
   4. ASSEMBLY THAT MEET THE PERFORMANCE CRITERIA IN ACCORDANCE WITH THE TEST PROCEDURES FOR A TEN MINUTE DIRECT FLAME CONTACT EXPOSURE TEST SET FORTH IN SFM STANDARD 12-7A-1
   5. ASSEMBLY SUITABLE FOR EXTERIOR FIRE EXPOSURE WITH A 1-HOUR FIRE RESISTANCE RATING, RATED FROM THE EXTERIOR SIDE, AS TESTED IN ACCORDANCE WITH ASTM E119 OR UL263
   6. ASSEMBLY SUITABLE FOR EXTERIOR FIRE EXPOSURE CONTAINING ONE LAYER OF $\frac{5}{8}$ -INCH TYPE X GYPSUM SHEATHING APPLIED BEHIND THE EXTERIOR WALL COVERING OR CLADDING ON THE EXTERIOR SIDE OF THE FRAMING.
   7. ASSEMBLY SUITABLE FOR EXTERIOR EXPOSURE CONTAINING ANY OF THE GYPSUM PANEL AND SHEATHING PRODUCTS LISTED IN THE GYPSUM ASSOCIATION FIRE RESISTANCE DESIGN MANUEL AS COMPLYING WITH A 1-HOUR FIRE-RESISTANCE RATING, AS TESTED IN ACCORDANCE WITH ASTM E119 OR UL 263
9. R337.7.5 OPEN ROOF EAVES. THE EXPOSED ROOF DECK ON THE UNDERSIDE OF ENCLOSED ROOF EAVES SHALL CONSIST OF ONE OR MORE OF THE FOLLOWING: PLEASE SEE SHEET A5.2 DETAILS 1, 2, 3, 5, 6, AND 7 FOR FIRE RATED ROOF ASSEMBLIES.
   1. NON COMBUSTIBLE MATERIAL
   2. IGNITION- RESISTANT MATERIAL. THE IGNITION-RESISTANT MATERIAL SHALL BE LABELED FOR EXTERIOR USE AN SHALL MEET THE REQUIREMENTS OF SECTION R337.4.2
   3. FIRE-RETARDANT-TREATED WOOD. THE FIRE-RETARDANT-TREATED WOOD SHALL BE LABELED FOR EXTERIOR USE AND SHALL MEET THE REQUIREMENTS OF SECTION 2303.2
   4. MATERIALS APPROVED FOR NOT LESS THAN 1-HOUR FIRE-RESISTANCE-RATED CONSTRUCTION ON THE EXTERIOR SIDE, AS TESTED IN ACCORDANCE WITH ASTM E119 OR UL 263
   5. ONE LAYER OF ⅝" TYPE X GYPSUM SHEATHING APPLIES BEHIND AN EXTERIOR COVERING ON THE UNDERSIDE EXTERIOR OF THE ROOF DECK.
   6. THE EXTERIOR PORTION A 1- HOUR FIRE RESISTIVE EXTERIOR ASSEMBLY, APPLIES AS TESTED IN ACCORDANCE WITH ASTM E119 OR UL 263, APPLIED TO THE UNDERSIDE OF THE ROOF DECK DESIGNED FOR THE EXTERIOR FIRE EXPOSURE, INCLUDING ASSEMBLES USING THE GYPSUM PANEL AND SHEATHING PRODUCTS LISTED IN THE GYPSUM ASSOCIATION FIRE RESISTANCE DEIGN MANUAL.

   EXCEPTION TO SECTION R337.7.5: THE FOLLOWING MATERIALS DO NOT REQUIRE PROTECTION:
   FASCIA AND OTHER ARCHITECTURAL TRIM BOARDS
10. R337.7.6 ENCLOSED ROOF EAVES AND ROOF EAVE SOFFITS. THE EXPOSED UNDERSIDE OF ENCLOSED ROOF EAVES HAVING EITHER A BOXED-IN ROOF EAVE SOFFIT WITH A HORIZONTAL UNDERSIDE,OR SLOPING RAFTER TAILS WITH AN EXTERIOR COVERING APPLIED TO THE UNDERSIDE OF THE RAFTER TAILS, SHALL BE PROTECTED BY ONE OR MORE OF THE FOLLOWING:
    1. NONCOMBUSTIBLE MATERIAL
    2. IGNITION- RESISTANT MATERIAL. THE IGNITION-RESISTANT MATERIAL SHALL BE LABELED FOR EXTERIOR USE AND SHALL MEET THE REQUIREMENTS OF SECTION R337.4.2
    3. FIRE-RETARDANT-TREATED-WOOD. THE FIRE-RETARDANT TREATED WOOD SHALL BE LABELED FOR EXTERIOR USE AND SHALL MEET THE REQUIREMENTS OF SECTION 2303.2
    4. MATERIALS APPROVED FOR NOT LESS THAN 1-HOUR FIRE-RESISTANCE-RATED CONSTRUCTION ON THE EXTERIOR SIDE, AS TESTED IN ACCORDANCE WITH ASTM E119 OR UL 263
    5. ONE LAYER OF ⅝" TYPE X GYPSUM SHEATHING APPLIED BEHIND AN EXTERIOR COVERING ON THE UNDERSIDE OF THE FLOOR PROJECTION.
    6. THE EXTERIOR PORTION A 1- HOUR FIRE RESISTIVE EXTERIOR ASSEMBLY, APPLIED TO THE UNDERSIDE OF THE RAFTER TAIS OR SOFFIT, INCLUDING ASSEMBLES USING THE GYPSUM PANEL AND SHEATHING PRODUCTS LISTED IN THE GYPSUM ASSOCIATION FIRE RESISTANCE DESIGN MANUAL
    7. BOXED-IN ROOF EAVE SOFFIT ASSEMBLIES WITH A HORIZONTAL UNDERSIDE THAT MEET THE PERFORMANCE CRITERIA IN SECTION R337.7.11 WHEN TESTED IN ACCORDANCE WITH THE TEST PROCEDURES SET FORTH IN ASTM E2957
    8. BOXED-IN ROOF EAVE SOFFIT ASSEMBLIES WITH A HORIZONTAL UNDERSIDE THAT MEET THE PERFORMANCE CRITERIA IN SECTION R337.7.11 WHEN TESTED IN ACCORDANCE WITH THE TEST PROCEDURES SET FORTH IN SFM STANDARD 12-7A-3

    EXCEPTION TO SECTION R337.7.6: THE FOLLOWING MATERIALS DO NOT REQUIRE PROTECTION:FASCIA AND OTHER ARCHITECTURAL TRIM BOARDS
11. R337.7.7 EXTERIOR PORCH CEILINGS. THE EXPOSED UNDERSIDE OF THE EXTERIOR PORCH CEILINGS SHALL BE PROTECTED BY ONE OF THE FOLLOWING:
    1. NON COMBUSTIBLE MATERIAL
    2. IGNITION- RESISTANT MATERIAL. THE IGNITION-RESISTANT MATERIAL SHALL BE LABELED FOR EXTERIOR USE AND SHALL MEET THE REQUIREMENTS OF SECTION R337.4.2
    3. FIRE-RETARDANT-TREATED-WOOD. THE FIRE-RETARDANT TREATED WOOD SHALL BE LABELED FOR EXTERIOR USE AND SHALL MEET THE REQUIREMENTS OF SECTION 2303.2
    4. MATERIALS APPROVED FOR NOT LESS THAN 1-HOUR FIRE-RESISTANCE-RATED CONSTRUCTION ON THE EXTERIOR SIDE, AS TESTED IN ACCORDANCE WITH ASTM E119 OR UL 263
    5. ONE LAYER OF ⅝" TYPE X GYPSUM SHEATHING APPLIED BEHIND THE EXTERIOR COVERING OR CLADDING ON THE UNDERSIDE OF THE RAFTER TAILS OR SOFFIT.
    6. THE EXTERIOR PORTION A 1- HOUR FIRE RESISTIVE EXTERIOR ASSEMBLY, AS TESTED IN ACCORDANCE WITH ASTM E119, APPLIED TO THE UNDERSIDE OF THE CEILING ASSEMBLY, INCLUDING ASSEMBLES USING THE GYPSUM PANEL AND SHEATHING PRODUCTS LISTED IN THE GYPSUM ASSOCIATION FIRE RESISTANCE DESIGN MANUAL.
    7. PORCH CEILING ASSEMBLIES WITH A HORIZONTAL UNDERSIDE THAT MEET THE PERFORMANCE CRITERIA IN SECTION R337.7.11 WHEN TESTED IN ACCORDANCE WITH THE TEST PROCEDURES SET FORTH IN ASTM E2957
    8. PORCH CEILING ASSEMBLIES WITH A HORIZONTAL UNDERSIDE THAT MEET THE PERFORMANCE CRITERIA IN ACCORDANCE WITH THE TEST PROCEDURES SET FORTH IN SFM STANDARD 12-7A-3

    EXCEPTION TO SECTION R337.7.7: ARCHITECTURAL TRIM BOARDS DO NOT REQUIRE PROTECTION
12. R337.7.8 FLOOR PROJECTIONS. THE EXPOSED UNDERSIDE OF A CANTILEVER FLOOR PROJECTION WHERE A FLOOR ASSEMBLY EXTENDS OVER AN EXTERIOR WALL SHALL BE PROTECTED BY ON OF THE FOLLOWING:
    1. NONCOMBUSTIBLE MATERIAL
    2. IGNITION- RESISTANT MATERIAL. THE IGNITION-RESISTANT MATERIAL SHALL BE LABELED FOR EXTERIOR USE AND SHALL MEET THE REQUIREMENTS OF SECTION R337.4.2
    3. FIRE-RETARDANT-TREATED-WOOD. THE FIRE-RETARDANT TREATED WOOD SHALL BE LABELED FOR EXTERIOR USE AND SHALL MEET THE REQUIREMENTS OF SECTION 2303.2
    4. MATERIALS APPROVED FOR NOT LESS THAN 1-HOUR FIRE-RESISTANCE-RATED CONSTRUCTION ON THE EXTERIOR SIDE, AS TESTED IN ACCORDANCE WITH ASTM E119 OR UL 263
    5. ONE LAYER OF ⅝" TYPE X GYPSUM SHEATHING APPLIED BEHIND AND EXTERIOR COVERING ON THE UNDERSIDE OF THE CEILING
    6. THE EXTERIOR PORTION A 1- HOUR FIRE RESISTIVE EXTERIOR ASSEMBLY, AS TESTED IN ACCORDANCE WITH ASTM E119, APPLIED TO THE UNDERSIDE OF THE CEILING ASSEMBLY, INCLUDING ASSEMBLES USING THE GYPSUM PANEL AND SHEATHING PRODUCTS LISTED IN THE GYPSUM ASSOCIATION FIRE RESISTANCE DESIGN MANUAL.
    7. THE UNDERSIDE OF A FLOOR PROJECTIONS ASSEMBLY THAT MEETS THE PERFORMANCE CRITERIA IN SECTION R337.7.10 WHEN TESTED IN ACCORDANCE WITH THE TEST PROCEDURES SET FORTH IN ASTM E2957.
    8. THE UNDERSIDE OF A FLOOR PROJECTIONS ASSEMBLY THAT MEETS THE PERFORMANCE CRITERIA IN ACCORDANCE WITH THE TEST PROCEDURES SET FORTH IN THE SFM STD 12-7A-3.

    EXCEPTION TO SECTION R337.7.8: ARCHITECTURAL TRIM BOARDS DO NOT REQUIRE PROTECTION
13. R337.7.9 UNDERFLOOR PROTECTION. THE UNDERFLOOR AREA OF ELEVATED OR OVERHANGING BUILDINGS SHALL BE ENCLOSED TO GRADE IN ACCORDANCE WITH THE REQUIREMENTS OF THIS CHAPTER OR THE UNDERSIDE OF THE EXPOSED UNDERFLOOR SHALL BE PROTECTED BY ONE OR MORE OF THE FOLLOWING:
    1. NONCOMBUSTIBLE MATERIAL
    2. IGNITION- RESISTANT MATERIAL. THE IGNITION-RESISTANT MATERIAL SHALL BE LABELED FOR EXTERIOR USE AND SHALL MEET THE REQUIREMENTS OF SECTION R337.4.2
    3. FIRE-RETARDANT-TREATED-WOOD. THE FIRE-RETARDANT TREATED WOOD SHALL BE LABELED FOR EXTERIOR USE AND SHALL MEET THE REQUIREMENTS OF SECTION 2303.2
    4. MATERIALS APPROVED FOR NOT LESS THAN 1-HOUR FIRE-RESISTANCE-RATED CONSTRUCTION ON THE EXTERIOR SIDE, AS TESTED IN ACCORDANCE WITH ASTM E119 OR UL 263
    5. ONE LAYER OF ⅝" TYPE X GYPSUM SHEATHING APPLIED BEHIND AND EXTERIOR COVERING ON THE UNDERSIDE OF THE FLOOR PROJECTION
    6. THE EXTERIOR PORTION A 1- HOUR FIRE RESISTIVE EXTERIOR ASSEMBLY, AS TESTED IN ACCORDANCE WITH ASTM E119 OR UL 263, APPLIED TO THE UNDERSIDE OF THE FLOOR, INCLUDING ASSEMBLES USING THE GYPSUM PANEL AND SHEATHING PRODUCTS LISTED IN THE GYPSUM ASSOCIATION FIRE RESISTANCE DESIGN MANUAL.
    7. THE UNDERSIDE OF A FLOOR ASSEMBLY THAT MEETS THE PERFORMANCE CRITERIA IN SECTION R337.7.11 WHEN TESTED IN ACCORDANCE WITH THE TEST PROCEDURES SET FORTH IN ASTM E2957.
    8. THE UNDERSIDE OF A FLOOR ASSEMBLY THAT MEETS THE PERFORMANCE CRITERIA IN ACCORDANCE WITH THE TEST PROCEDURES SET FORTH IN SFM STANDARD 12-7A-3.

    EXCEPTION TO SECTION R337.7.9: STRUCTURAL COLUMNS AND BEAMS DO NOT REQUIRE PROTECTION WHEN CONSTRUCTED WITH SAWN LUMBER OR GLUE-LAMINATED WOOD WITH THE SMALLEST MINIMUM NOMINAL DIMENSION OF 4 INCHES. SAWN OR GLUE-LAMINATED PLANKS SHALL BE SPLINED, TONGUE-AND-GROOVE, OR SET CLOSE TOGETHER AND WELL SPIKED.
14. R337.7.10 UNDERSIDE OF APPENDAGES. WHEN REQUIRED BY THE ENFORCING AGENCY THE UNDERSIDE OF OVERHANGING APPENDAGES SHALL BE ENCLOSED TO GRADE IN ACCORDANCE WITH THE REQUIREMENTS OF THIS CHAPTER OR THE UNDERSIDE OF THE EXPOSED UNDER FLOOR SHALL CONSIST OF ONE OF THE FOLLOWING:
    1. NONCOMBUSTIBLE MATERIAL
    2. IGNITION- RESISTANT MATERIAL. THE IGNITION-RESISTANT MATERIAL SHALL BE LABELED FOR EXTERIOR USE AND SHALL MEET THE REQUIREMENTS OF SECTION R337.4.2
    3. FIRE-RETARDANT-TREATED-WOOD. THE FIRE-RETARDANT TREATED WOOD SHALL BE LABELED FOR EXTERIOR USE AND SHALL MEET THE REQUIREMENTS OF SECTION 2303.2
    4. MATERIALS APPROVED FOR NOT LESS THAN 1-HOUR FIRE-RESISTANCE-RATED CONSTRUCTION ON THE EXTERIOR SIDE, AS TESTED IN ACCORDANCE WITH ASTM E119 OR UL 263
    5. ONE LAYER OF ⅝" TYPE X GYPSUM SHEATHING APPLIED BEHIND THE EXTERIOR COVERING ON THE UNDERSIDE OF THE APPENDAGE PROJECTION
    6. THE EXTERIOR PORTION A 1- HOUR FIRE RESISTIVE EXTERIOR ASSEMBLY, AS TESTED IN ACCORDANCE WITH ASTM E119 OR UL 263, APPLIED TO THE UNDERSIDE OF THE APPENDAGE, INCLUDING ASSEMBLES USING THE GYPSUM PANEL AND SHEATHING PRODUCTS LISTED IN THE GYPSUM ASSOCIATION FIRE RESISTANCE DESIGN MANUAL.
    7. THE UNDERSIDE OF AN APPENDAGE ASSEMBLY THAT MEETS THE PERFORMANCE CRITERIA IN SECTION R337.7.11 WHEN TESTED IN ACCORDANCE WITH THE TEST PROCEDURES SET FORTH IN ASTM E2957.
    8. THE UNDERSIDE OF AN APPENDAGE ASSEMBLY THAT MEETS THE PERFORMANCE CRITERIA IN ACCORDANCE WITH THE TEST PROCEDURES SET FORTH IN SFM STANDARD 12-7A-3.

    EXCEPTION TO SECTION R337.7.10: STRUCTURAL COLUMNS AND BEAMS DO NOT REQUIRE PROTECTION WHEN CONSTRUCTED WITH SAWN LUMBER OR GLUE-LAMINATED WOOD WITH THE SMALLEST MINIMUM NOMINAL DIMENSION OF 4 INCHES. SAWN OR GLUE-LAMINATED PLANKS SHALL BE SPLINED, TONGUE-AND-GROOVE, OR SET CLOSE TOGETHER AND WELL SPIKED
15. R337.8.2 EXTERIOR GLAZING. THE FOLLOWING EXTERIOR GLAZING MATERIALS AND/OR ASSEMBLIES SHALL COMPLY WITH THIS SECTION:
    1. EXTERIOR WINDOWS
    2. EXTERIOR GLAZED DOORS
    3. GLAZED OPENINGS WITHIN EXTERIOR DOORS
    4. GLAZED OPENINGS WITHIN EXTERIOR GARAGE DOORS
    5. EXTERIOR STRUCTURAL GLASS VENEERS
    6. SKYLIGHTS
    7. VENTS
16. R337.8.2.1 EXTERIOR WINDOWS AND EXTERIOR GLAZED DOOR ASSEMBLY REQUIREMENTS:
    1. BE CONSTRUCTED OF MULTI-PANE GLAZING WITH A MINIMUM OF ONE TEMPERED PANE MEETING THE REQUIREMENTS OF SECTION 2406 SAFETY GLAZING, OR
    2. BE CONSTRUCTED OF GLASS BLOCK UNITS, OR
    3. HAVE A FIRE-RESISTANT RATING OF NOT LESS THAN 20 MINUTES WHEN TESTED IN ACCORDANCE TO NFPA 257, OR
    4. BE TESTED TO MEET THE PERFORMANCE REQUIREMENTS OF SFM STANDARD 12-7A-2.
17. R337.8.3 EXTERIOR DOORS. EXTERIOR DOORS SHALL COMPLY WITH ONE OF THE FOLLOWING:
    1. THE EXTERIOR SURFACE OR CLADDING SHALL BE OF NON-COMBUSTIBLE OR IGNITION-RESISTANT MATERIAL
    2. THE EXTERIOR SURFACE OR CLADDING SHALL BE IGNITION RESISTANT MATERIAL
    3. THE EXTERIOR DOOR SHALL BE CONSTRUCTED OF SOLID CORE WOOD THAT COMPLY WITH THE FOLLOWING REQUIREMENTS:
       3.1 STILES AND RAILS SHALL NOT BE LESS THAN 1-3/8" THICK.
       3.2 RAISED PANELS SHALL NOT BE LESS THAN 1-1/4" THICK. EXCEPT FOR THE EXTERIOR PERIMETER OF THE PANEL THAT SHALL BE PERMITTED TO TAPER TO A TONGUE NOT LESS THAN ⅜" THICK.
    4. THE EXTERIOR DOOR SHALL HAVE A FIRE-RESISTANCE RATING OF NOT LESS THAN 20 MINUTES WHEN TESTED ACCORDING TO THE NFPA 252.
    5. THE EXTERIOR SURFACE OR CLADDING SHALL BE TESTED TO MEET THE PERFORMANCE IN SECTION R337.7.3.1 WHEN TESTED IN ACCORDANCE WITH ASTM E2707.
    6. THE EXTERIOR SURFACE OR CLADDING SHALL BE TESTED TO MEET THE PERFORMANCE REQUIREMENTS OF SFM STANDARD 12-7A-1.
18. R337.8.3.1 EXTERIOR DOOR GLAZING. GLAZING IN EXTERIOR DOORS SHALL COMPLY WITH SECTION R337.8.2.1.

FIRE SPRINKLER NOTES

1. IF FIRE SPRINKLERS ARE REQUIRED AT PROPOSED DWELLING OR ADU THEN THE FOLLOWING NOTES APPLY.
2. AUTOMATIC FIRE SPRINKLER SYSTEM - AN AUTOMATIC FIRE SPRINKLER SYSTEM SHALL BE INSTALLED AS PER NFPA 13D THE MOST CURRENT EDITION. DETAILED SPRINKLER PLANS SHALL BE SUBMITTED TO THE FIRE PREVENTION BUREAU AND APPROVED PRIOR TO INSTALLATION. PLANS AND INSTALLATION MUST BE BY A C16 LICENSED SPRINKLER CONTRACTOR.
3. SECTION R313.2.1 AN AUTOMATIC SPRINKLER SYSTEM DESIGNED AND INSTALLED IN ACCORDANCE WITH SECTION R313.3 OR NFPA 13D.

FOR USE IN THE CITY OF PERRIS

DESIGN PATH STUDIO
architecture + engineering + planning
DESIGNPATHSTUDIO.COM

BY USING THESE PERMIT READY CONSTRUCTION DOCUMENTS, THE RECIPIENT ACKNOWLEDGES, ACCEPTS AND VOLUNTARILY AFFIRMS THE FOLLOWING CONDITIONS:
1. THE USE OF THIS INFORMATION IS RESTRICTED TO THE ORIGINAL PROJECT FOR WHICH IT WAS PREPARED FOR THE PERMIT READY ACCESSORY DWELLING UNIT (ADU) PROGRAM FOR THE CITY OF PERRIS ONLY. THIS IS A LIMITED SET OF STANDARDIZED ADU PLANS AND SPECIFICATIONS APPROVED BY THE CITY OF PERRIS BUILDING DEPARTMENT. BUILDING CODES DO CHANGE OVER TIME AND RECIPIENT SHALL ENSURE FULL COMPLIANCE UNDER ALL CODES THEN IN EFFECT AT THE TIME OF THE SUBJECT PERMIT. THIS DOES NOT ELIMINATE OR REDUCE THE RECIPIENT'S RESPONSIBILITY TO VERIFY ANY AND ALL INFORMATION RELEVANT TO THE RECIPIENT'S WORK AND RESPONSIBILITY ON THIS PROJECT. DESIGN PATH STUDIO SHALL NOT BE RESPONSIBLE FOR TRANSLATION ERRORS. DO NOT USE THESE CONSTRUCTION DOCUMENTS IF THE PERMIT HAS EXPIRED OR IS REVOKED AT ALL.
2. THE RECIPIENT RECOGNIZES AND ACKNOWLEDGES THAT THE USE OF THIS INFORMATION WILL BE AT THEIR SOLE RISK AND WITHOUT ANY LIABILITY OR LEGAL EXPOSURE TO DESIGN PATH STUDIO. NO WARRANTIES OF ANY NATURE, WHETHER EXPRESS OR IMPLIED, SHALL ATTACH TO THESE DOCUMENTS AND THE INFORMATION CONTAINED THEREON. ANY USE, REUSE, OR ALTERATION OF THESE DOCUMENTS BY THE RECIPIENT OR BY OTHERS WILL BE AT THE RECIPIENT'S RISK AND FULL LEGAL RESPONSIBILITY. FURTHERMORE, THE RECIPIENT WILL, TO THE FULLEST EXTENT PERMITTED BY LAW, DEFEND, INDEMNIFY AND HOLD DESIGN PATH STUDIO AND ITS ARCHITECTS HARMLESS FROM ANY AND ALL CLAIMS, SUITS, LIABILITY, DEMANDS, JUDGMENTS, OR COSTS ARISING OUT OF OR RESULTING THERE FROM ANY USE OF THESE CONSTRUCTION DOCUMENTS FOR OR ON ACCOUNT OF ANY INJURY, DEATH, DAMAGE OR LOSS TO PERSONS OR PROPERTY, DIRECT OR CONSEQUENTIAL DAMAGES IN ANY AMOUNT. THIS INDEMNITY DOES NOT APPLY TO THE SOLE NEGLIGENCE OR WILLFUL MISCONDUCT OF DESIGN PATH STUDIO OR ITS ARCHITECTS.
3. THE DESIGNS REPRESENTED BY THESE PLANS ARE COPYRIGHTED AND ARE SUBJECT TO COPYRIGHT PROTECTION.
4. IF THE RECIPIENT DOES NOT AGREE WITH THE ABOVE CONDITIONS, DO NOT PROCEED WITH CONSTRUCTION OF AN ADU OR OTHER IMPROVEMENT UNDER THESE PLANS AT ALL.

project
City of Perris
Pre-Approved
ADU Program

revisions
01

description
General
Notes

date 4 April 2025
project no. PERRIS PRADU
drawn by DESIGN PATH STUDIO
sheet no. G0.4

WINDOW SCHEDULE

WINDOW	WINDOW SIZE WIDTH	WINDOW SIZE HEIGHT	OPER.	QNTY	FRAME	HEAD HEIGHT	LOCATION	REMARKS	VHFSZ NOTES SEE SHEET G0.3 (WHEN REQ'D)
A	3'-0"	4'-0"	SINGLE HUNG	1	VINYL	6'-8"	FRONT LIVING ROOM WINDOW		NOTE 15 & 16
B	3'-0"	3'-0"	SINGLE HUNG	2	VINYL	6'-8"	KITCHEN WINDOWS		NOTE 15 & 16
C	2'-0"	3'-0"	CASEMENT	1	VINYL	6'-8"	LIVING ROOM WINDOW		NOTE 15 & 16
D	5'-0"	3'-0"	SLIDER	1	VINYL	6'-8"	LIVING ROOM WINDOW		NOTE 15 & 16
E	3'-0"	2'-0"	SLIDER	2	VINYL	6'-8"	BATHROOM/HALL WINDOWS	TEMPERED	NOTE 15 & 16
F	2'-0"	6'-8"	NON OP	1	VINYL	6'-8"	SIDE LITE	TEMPERED	NOTE 15 & 16

WINDOW NOTES

1. SEE EXTERIOR ELEVATION FOR DIRECTION OF OPERATION OF WINDOWS (ALL OPERABLE WINDOWS TO HAVE SCREENS)
2. ALL WINDOW DIMENSIONS PERTAIN TO ROUGH OPENINGS (R.O.). CONTRACTOR TO FIELD VERIFY ACTUAL DIMENSIONS FOR WINDOWS
3. ALL GLAZING WILL BE INSTALLED WITH A CERTIFYING LABEL ATTACHED, SHOWING THE NFRC LABEL.
4. ALL GLAZING SHALL BE SPECTRALY SELECTIVE LOW E COATED TO MEET TITLE 24 ENERGY REQUIREMENTS.
5. WINDOWS SHALL MEET THE MINIMUM INFILTRATION REQUIREMENTS PER SECTION 116 E.E.S.D
6. VENTILATION SHALL COMPLY WITH C.B.C. 1203.4 AND R303
7. EVERY SLEEPING ROOM SHALL HAVE ONE OPERABLE WINDOW FOR EMERGENCY ESCAPE OR RESCUE WITH A MIN. NET CLEAR OPENABLE AREA OF 5.7 SQ. FT, MIN. NET CLEAR OPENABLE HEIGHT OF 24" MIN., NET CLEAR WIDTH OF 20" AND A FIN. SILL HEIGHT OF NOT MORE THAN 44" A.F.F. PER CRC SECTION 310.1.
8. TEMPERED GLASS SHALL BE PERMANENTLY IDENTIFIED AND VISIBLE WHEN THE UNIT IS GLAZED.
9. EVERY SPACE INTENDED FOR HUMAN OCCUPANCY SHALL BE PROVIDED WITH NATURAL VENTILATION AND NATURAL LIGHT BY MEANS OF VENTILATION / ARTIFICIAL LIGHT. CBC SECTIONS 1203.4 AND 1205.1 AND R303

   THE MINIMUM NET GLAZED AREA FOR NATURAL LIGHT SHALL NOT BE LESS THAN 8%OF THE FLOOR AREA OF THE ROOM SERVED. CBC SECTION 1205.2.

   THE MINIMUM OPENABLE AREA TO THE OUTDOORS FOR NATURAL VENTILATION SHALL BE 4% OF THE FLOOR AREA BEING VENTILATED. SECTION 1203.4
10. EXTERIOR WINDOWS, WINDOW WALLS, GLAZED DOORS, AND GLAZED OPENINGS WITHIN EXTERIOR DOORS SHALL BE INSULATING-GLASS UNITS WITH A MINIMUM OF ONE TEMPERED PANE
11. FIRE-RESISTANCE RATED GLAZING TESTED AS PART OF A FIRE-RESISTANCE-RATED WALL ASSEMBLY IN ACCORDANCE WITH ASTM E 119 OR UL 263 TO BE CONSTRUCTED PER NOTE #13
12. THE FOLLOWING WINDOWS SHALL BE FULLY TEMPERED: (CRC R308.4)
    - -SLIDING/SWINGING GLASS DOORS
    - -GLAZING IN WALLS AND ENCLOSURES FACING HOT TUBS, SPAS, WHIRLPOOLS, SAUNAS, STEAM ROOMS, BATHTUBS, SHOWERS AND SWIMMING POOLS WHERE THE GLAZING IS LESS THAN 60 INCHES ABOVE THE STANDING SURFACE WITHIN THE COMPARTMENT AND WITHIN 60 INCHES HORIZONTALLY OF THE WATER'S EDGE (CRC R308.4.5)
    - -GLAZING WITHIN A 24" ARC OF A DOOR THAT IS LESS THAN 60 INCHES ABOVE THE FLOOR. SAFETY GLAZING REQUIRED ON A WALL LESS THAN 180 DEGREES FROM THE PLANE OF THE DOOR IN A CLOSED POSITION AND WITHIN 24" OF HINGE SIDE OF AN IN-SWING DOOR. (R308.4.2)
    - -GLAZING WHERE THE EXPOSED AREA IS GREATER THAN 9SQ.FT., BOTTOM IS LESS THAN 18 IN. AND AT LEAST 36 IN. ABOVE THE FLOOR, AND ADJACENT TO A WALKING SURFACE WITHIN 60IN. OF THE BOTTOM TREAD OF A STAIRWAY AND LESS THAN 36IN. ABOVE THE LANDING
    - -GLAZING IN GUARDS AND RAILINGS
    - -GLAZING ADJACENT TO STAIRWAYS, LANDINGS, AND RAMPS WITHIN 36IN. HORIZONTALLY OF THE WALKING SURFACE LESS THAN 36IN. ABOVE THE WALKING SURFACE

DOOR SCHEDULE

DOOR	DOOR TYPE	DOOR SIZE WIDTH	DOOR SIZE HEIGHT	DOOR SIZE ADA WIDTH	DOOR SIZE ADA HEIGHT	THICK.	CORE	MATERIAL	FRAME	LOCATION	REMARKS	VHFSZ NOTES SEE SHEET G0.3 (WHEN REQ'D)
1	SINGLE DOOR	3'-0"	6'-8"	3'-0"	6'-8"	1-3/4"	GL	VNL/GLASS	VINYL	FRONT ENTRY	TEMPERED	NOTE 15, 16, 17 & 18
2	SLIDING DOOR	5'-0"	6'-8"	5'-0"	6'-8"	1-3/4"	GL	VNL/GLASS	VINYL	SIDE ENTRY	TEMPERED	NOTE 15, 16, 17 & 18
3	SINGLE DOOR	3'-0"	6'-8"	3'-0"	6'-8"	1-3/4"	HLW	WOOD	WD	BATHROOM		
4	SILDER DOORS	5'-0"	6'-8"	3'-0"	6'-8"	1-3/4"	HLW	WOOD	WD	CLOSEST		
5	BI-FOLD DOORS			5'-0"	6'-8"	1-3/4"	HLW	WOOD	WD	WASHER/DRYER		
6	SINGLE DOOR	2'-4"	6'-8"	2'-0"	6'-8"	1-3/4"	HLW	WOOD	WD	WATER HEATER CLOSET	LOUVERED	

DOOR NOTES

1. ALL GLASS IN DOORS SHALL BE TEMPERED. TEMPERED GLASS SHALL BE PERMANENTLY IDENTIFIED AND VISIBLE WHEN THE UNIT IS GLAZED.
2. ALL GLAZING WILL BE INSTALLED WITH A CERTIFYING LABEL ATTACHED, SHOWING THE "U" VALUE.
3. REFER TO FLOOR PLANS FOR DIRECTION OF DOOR SWING.
4. DOORS SHALL MEET THE MINIMUM INFILTRATION REQUIREMENTS PER SECTION 116 E.E.S.
5. VENTILATION SHALL COMPLY WITH C.B.C. 1203.4 AND R303.
6. DOORS MAY OPEN TO THE EXTERIOR ONLY IF THE FLOOR OR LANDING IS NOT MORE THAN 1-½ INCH LOWER THAN THE DOOR THRESHOLD. SECTION R311.3.1 CRC
7. GLAZED OPENINGS WITHIN EXTERIOR DOORS SHALL BE INSULATNG-GLASS UNITS WITH A MINIMUM OF ONE TEMPERED PANE,
8. THE FOLLOWING WINDOWS SHALL BE FULLY TEMPERED: (CRC R308.4)
   - -SLIDING/SWINGING GLASS DOORS
   - -GLAZING IN WALLS AND ENCLOSURES FACING HOT TUBS, SPAS, WHIRLPOOLS, SAUNAS, STEAM ROOMS, BATHTUBS, SHOWERS AND SWIMMING POOLS WHERE THE GLAZING IS LESS THAN 60 INCHES ABOVE THE STANDING SURFACE WITHIN THE COMPARTMENT AND WITHIN 60 INCHES HORIZONTALLY OF THE WATER'S EDGE (CRC R308.4.5)
   - -GLAZING WITHIN A 24" ARC OF A DOOR THAT IS LESS THAN 60 INCHES ABOVE THE FLOOR. SAFETY GLAZING REQUIRED ON A WALL LESS THAN 180 DEGREES FROM THE PLANE OF THE DOOR IN A CLOSED POSITION AND WITHIN 24" OF HINGE SIDE OF AN IN-SWING DOOR. (R308.4.2)
   - -GLAZING WHERE THE EXPOSED AREA IS GREATER THAN 9SQ.FT., BOTTOM IS LESS THAN 18 IN. AND AT LEAST 36 IN. ABOVE THE FLOOR, AND ADJACENT TO A WALKING SURFACE WITHIN 60IN. OF THE BOTTOM TREAD OF A STAIRWAY AND LESS THAN 36IN. ABOVE THE LANDING
   - -GLAZING IN GUARDS AND RAILINGS
   - -GLAZING ADJACENT TO STAIRWAYS, LANDINGS, AND RAMPS WITHIN 36IN. HORIZONTALLY OF THE WALKING SURFACE LESS THAN 36IN. ABOVE THE WALKING SURFACE
9. NOT USED
10. NOT USED
11. EXTERIOR HINGED DOORS FACING THE SOURCE OF NOISE MUST BE MIN. STC 40 DB
12. SLIDING GLASS DOORS NOT FACING SOURCE OF NOISE MUST BE MIN STC 35 DB. DIRECT EXPOSURE NOT PERMITTED

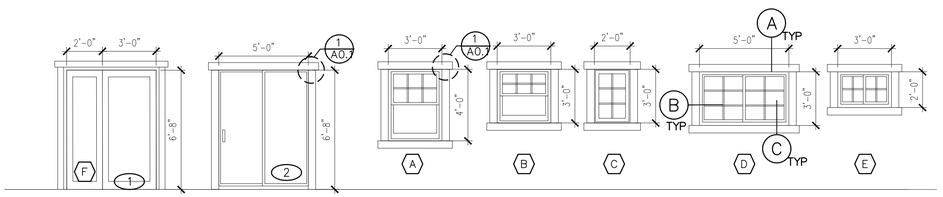

EXTERIOR CRAFTSMAN ELEVATION 1/4"=1'-0"

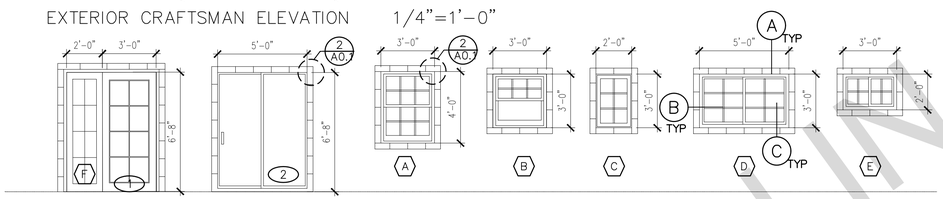

EXTERIOR SPANISH ELEVATION 1/4"=1'-0"

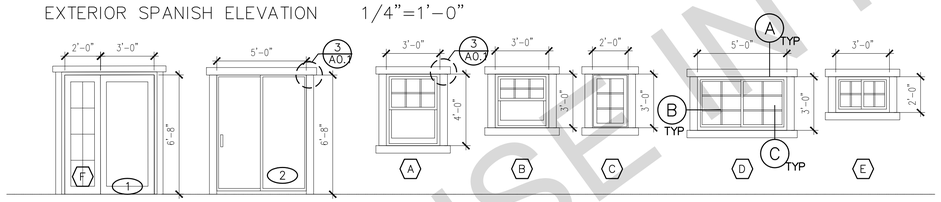

EXTERIOR TRADITIONAL ELEVATION 1/4"=1'-0"

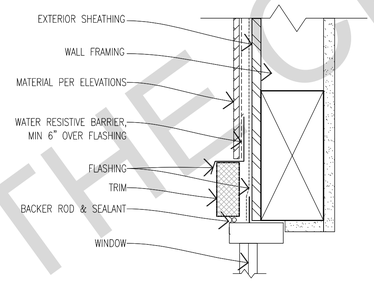

A HEAD SECTION VIEW

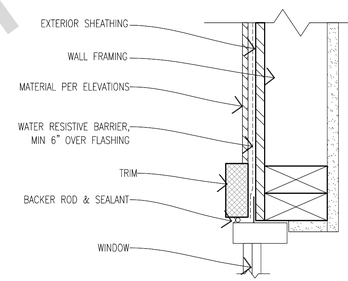

B JAMB PLAN VIEW

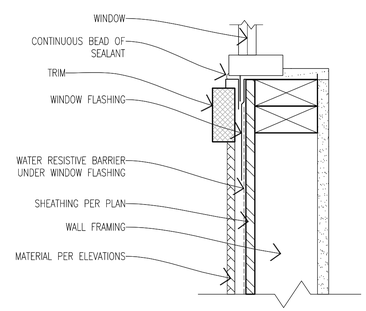

C SILL SECTION VIEW

WINDOW DETAILS
SCALE: 3"=1'-0"

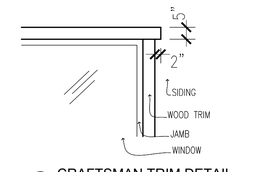

1 CRAFTSMAN TRIM DETAIL
ELEVATION VIEW 1/2"=1'-0"

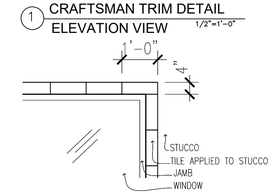

2 SPANISH TRIM DETAIL
ELEVATION VIEW 1/2"=1'-0"

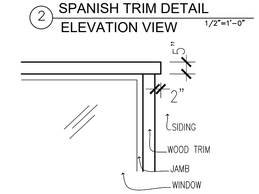

3 TRADITIONAL TRIM DETAIL
ELEVATION VIEW 1/2"=1'-0"

FOR USE IN THE CITY OF PERRIS

DESIGN PATH STUDIO
architecture + engineering + planning
DESIGNPATHSTUDIO.COM

BY USING THESE PERMIT READY CONSTRUCTION DOCUMENTS, THE RECIPIENT ACKNOWLEDGES, ACCEPTS AND VOLUNTARILY AFFIRMS THE FOLLOWING CONDITIONS:
1. THE USE OF THIS INFORMATION IS RESTRICTED TO THE ORIGINAL PROJECT FOR WHICH IT WAS PREPARED FOR THE PERMIT READY ACCESSORY DWELLING UNIT (ADU) PROGRAM FOR THE CITY OF PERRIS ONLY. THIS IS A LIMITED SET OF STANDARDIZED ADU PLANS AND SPECIFICATIONS APPROVED BY THE CITY OF PERRIS BUILDING DEPARTMENT. BUILDING CODES DO CHANGE OVER TIME AND RECIPIENT SHALL ENSURE FULL COMPLIANCE UNDER ALL CODES THEN IN EFFECT AT THE TIME OF THE SUBJECT PERMIT. THIS DOES NOT ELIMINATE OR REDUCE THE RECIPIENT'S RESPONSIBILITY TO VERIFY ANY AND ALL INFORMATION RELEVANT TO THE RECIPIENT'S WORK AND RESPONSIBILITY ON THIS PROJECT. DESIGN PATH STUDIO SHALL NOT BE RESPONSIBLE FOR TRANSLATION ERRORS. DO NOT USE THESE CONSTRUCTION DOCUMENTS IF THE PERMIT HAS EXPIRED OR IS REVOKED AT ALL.
2. THE RECIPIENT RECOGNIZES AND ACKNOWLEDGES THAT THE USE OF THIS INFORMATION WILL BE AT THEIR SOLE RISK AND WITHOUT ANY LIABILITY OR LEGAL EXPOSURE TO DESIGN PATH STUDIO. NO WARRANTIES OF ANY NATURE, WHETHER EXPRESS OR IMPLIED, SHALL ATTACH TO THESE DOCUMENTS AND THE INFORMATION CONTAINED THEREON. ANY USE, REUSE, OR ALTERATION OF THESE DOCUMENTS BY THE RECIPIENT OR BY OTHERS WILL BE AT THE RECIPIENT'S RISK AND FULL LEGAL RESPONSIBILITY. FURTHERMORE, THE RECIPIENT WILL, TO THE FULLEST EXTENT PERMITTED BY LAW, DEFEND, INDEMNIFY AND HOLD DESIGN PATH STUDIO AND ITS ARCHITECTS HARMLESS FROM ANY AND ALL CLAIMS, SUITS, LIABILITY, DEMANDS, JUDGMENTS, OR COSTS ARISING OUT OF OR RESULTING THERE FROM ANY USE OF THESE CONSTRUCTION DOCUMENTS FOR OR ON ACCOUNT OF ANY INJURY, DEATH, DAMAGE OR LOSS TO PERSONS OR PROPERTY, DIRECT OR CONSEQUENTIAL DAMAGES IN ANY AMOUNT. THIS INDEMNITY DOES NOT APPLY TO THE SOLE NEGLIGENCE OR WILLFUL MISCONDUCT OF DESIGN PATH STUDIO OR ITS ARCHITECTS.
3. THE DESIGNS REPRESENTED BY THESE PLANS ARE COPYRIGHTED AND ARE SUBJECT TO COPYRIGHT PROTECTION.
4. IF THE RECIPIENT DOES NOT AGREE WITH THE ABOVE CONDITIONS, DO NOT PROCEED WITH CONSTRUCTION OF AN ADU OR OTHER IMPROVEMENT UNDER THESE PLANS AT ALL.

project
City of Perris
Pre-Approved
ADU Program

revisions
0

description
Window &
Door
Schedules

date 4 April 2025

project no. PERRIS PRADU

drawn by DESIGN PATH STUDIO

sheet no. A0.1

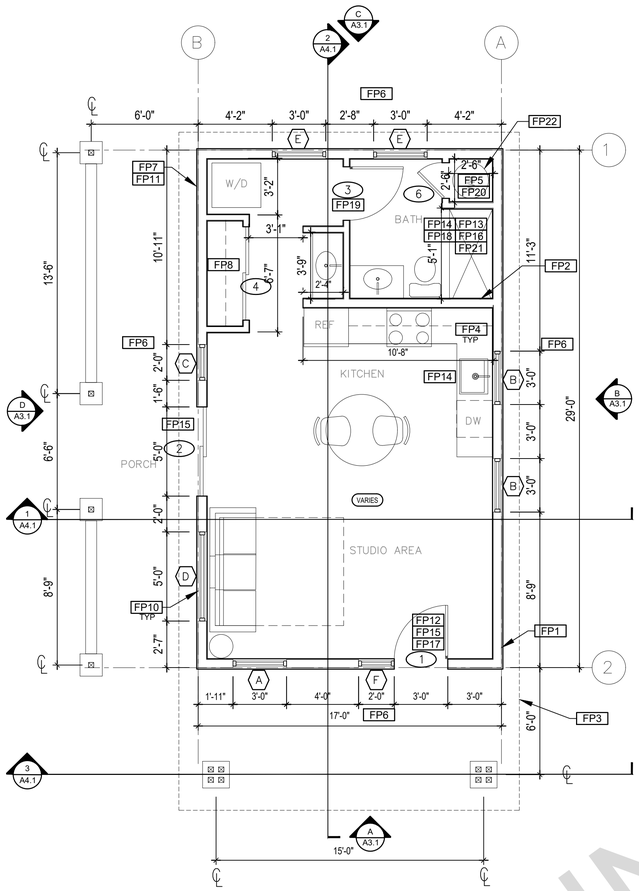

CRAFTSMAN FLOOR PLAN

1/4"=1'-0" 499 SQ. FT. STUDIO

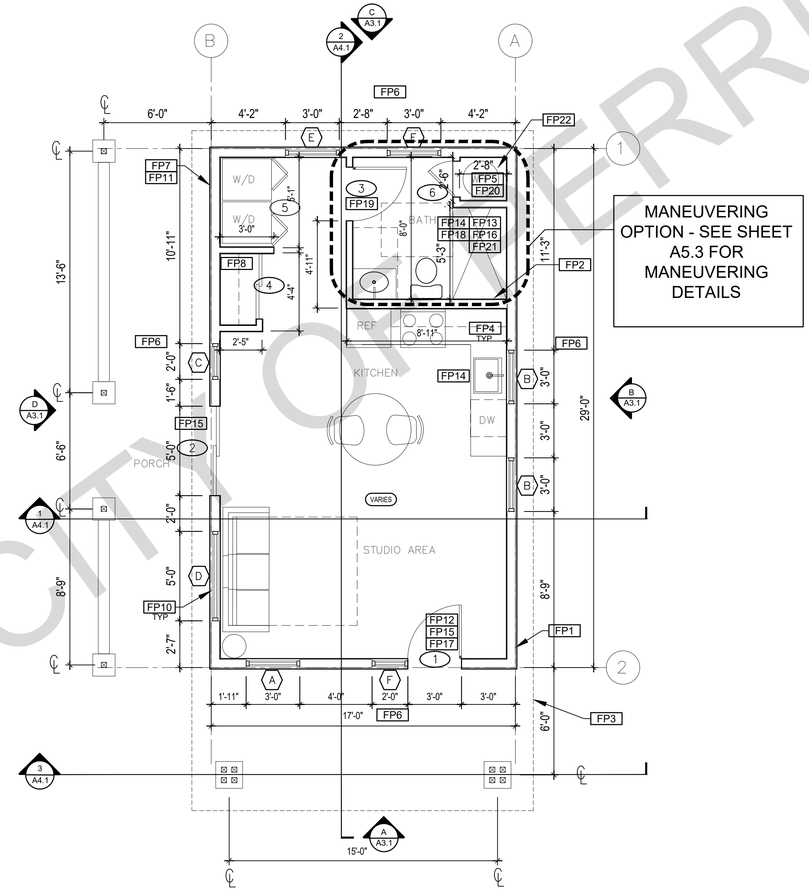

MANEUVERING OPTION

1/4"=1'-0" 499 SQ. FT. STUDIO

ROOF KEYNOTES

- RP1 LINE OF ROOF OVERHANG
- RP2 CLASS A ROOFING MATERIAL. SEE GENERAL ROOF NOTE 13 ON SHEET G0.2 ICC ESR_____
- RP3 SUPPORT POST BELOW
- RP4 LINE OF WALLS BELOW
- RP5 ROOF DOWNSPOUT LOCATION TO BE DETERMINED BY SITE SPECIFIC CONDITIONS. ROOF GUTTERS SHALL BE PROVIDED WITH THE MEANS TO PREVENT THE ACCUMULATION OF LEAVES AND DEBRIS IN THE GUTTER IN HIGH FIRE SEVERITY ZONES.
- RP6 DESIGNATED SOLAR PANEL AREA. PLEASE SEE SOLAR READY NOTES ON THIS SHEET
- RP7 RAFTER VENTS TO MEET REQUIRED VENTILATION AREA FOR ENCLOSED RAFTER SPACES. MAX ¼", MIN ⅛" OPENING SIZE ON VENT SCREEN WITH CORROSION-RESISTANT WIRE SCREEN MATERIAL. 1 SF OF VENTING PER 150 SF OF ENCLOSED RAFTER AREA IN NON-FIRE RATED CONSTRUCTION PLEASE SEE VENTING CALCULATIONS OF THIS SHEET

FLOOR PLAN KEYNOTES

- FP1 STUD WALL SIZED PER STRUCTURAL
- FP2 2X6 STUD WALL OR FURRING AS NEEDED FOR MECHANICAL / PLUMBING / VENTING
- FP3 LINE OF OVERHANG ABOVE
- FP4 36" HIGH COUNTER
- FP5 WATER HEATER
- FP6 SLOPE SURFACE AWAY FROM BUILDING
- FP7 DRYER VENT TERMINATION ON EXTERIOR WALL TO BE A MINIMUM OF 3 FT FROM ANY OPENING. DRYER VENT SHALL NOT TERMINATE WITHIN 3 FT FROM THE PROPERTY LINES
- FP8 CLOSET SHELF AND POLE
- FP9 EMERGENCY EGRESS WINDOW
- FP10 WINDOW MUST HAVE A FRAME AND SASH COMPRISED OF WELDED CORNERS, METAL REINFORCEMENT IN THE INTERLOCK AREA, AND CONSTRUCTED OF MULTIPANE TEMPERED GLAZING WHERE INDICATED TYPICAL ALL WINDOWS
- FP11 VENT DRYER THROUGH WALL. SEE MECHANICAL / PLUMBING PLANS FOR FURTHER INFORMATION
- FP12 MIN. 1 HINGED ENTRY DOOR FOR EGRESS COMPLIANCE REQUIRED - THE EGRESS DOOR SHALL BE SIDE-HINGED AND SHALL PROVIDE A CLEAR WIDTH OF NOT LESS THAN 32 INCHES WHERE MEASURED BETWEEN THE FACE OF THE DOOR AND THE STOP, WITH THE DOOR OPEN 90°. THE CLEAR HEIGHT OF THE DOOR OPENING SHALL BE NOT LESS THAN 78 INCHES IN HEIGHT MEASURED FROM THE TOP OF THE THRESHOLD TO THE BOTTOM OF THE STOP
- FP13 SHOWER ENCLOSURE MUST BE TEMPERED. GLAZING IN THE WALLS/DOORS FACING OR CONTAINING BATHTUBS, SHOWERS, HOT TUBS, SPAS, WHIRLPOOLS, SAUNAS, STEAM ROOMS AND INDOOR/OUTDOOR SWIMMING POOLS WHERE THE BOTTOM EXPOSED EDGE OF THE GLAZING IS LESS THAN 60" ABOVE THE STANDING SURFACE. EXCEPTION: GLAZING THAT IS MORE THAN 60", MEASURED HORIZONTALLY, FROM THE WATER'S EDGE OF A BATHTUB, HOT TUB, SPA, WHIRLPOOL OR SWIMMING POOL. SHOWER DOORS SHALL OPEN AS TO MAINTAIN NOT LESS THAN A 22-INCH UNOBSTRUCTED OPENING FOR EGRESS.
- FP14 PER SECTION 301.1.1 CALGREEN AND CIVIL CODE 1101.3(c), ALL PLUMBING FIXTURES SHALL BE COMPLIANT WATER -CONSERVING PLUMBING FIXTURES. SEE MECHANICAL / PLUMBING PLANS FOR FURTHER INFORMATION
- FP15 LANDING OR FLOOR REQUIRED AT EACH SIDE OF EXTERIOR DOOR. WIDTH TO BE NOT LESS THAN THE DOOR SERVED AND HAVE A MIN 36 INCH DEPTH MEASURED IN THE DIRECTION OF TRAVEL. EXTERIOR LANDINGS SHALL BE PERMITTED TO HAVE A SLOPE NOT TO EXCEED ¼" PER FOOT, (CRC 3111.3) LANDINGS OR FINISHED FLOORS AT EGRESS DOOR SHALL NOT BE MORE THAN 1.5" LOWER THAN THE TOP OF THE THRESHOLD FOR OUTWARD SWINGING DOORS OR 7.75" FOR DOORS THAT DO NOT SWING OUTWARD. (CRC 3111.3.1)
  DOORS OTHER THAN THE REQUIRED EGRESS DOOR SHALL BE PROVIDED WITH LANDINGS OR FLOORS NOT MORE THAN 7 75" BELOW THE TOP OF THE THRESHOLD (CRC 3111.3.2)
- FP16 WALL COVERING SHALL BE CEMENT PLASTER, TILE OR APPROVED EQUAL TO 72" ABOVE DRAIN AT SHOWERS OR TUB WITH SHOWERS. MATERIALS USED AS BACKERS FOR WALL TILE IN TUBE AND REINFORCED GYPSUM PANELS, NON-ASBESTOS FIBER CEMENT BACKER BOARD, OR NON-ASBESTOS FIBER CEMENT REINFORCED CEMENTITIOUS BACKER UNITS INSTALLED IN ACCORDANCE WITH MANUFACTURERS' RECOMMENDATIONS.
- FP17 DOOR BELL BUTTON TO BE NO MORE THEN 48" ABOVE EXTERIOR FLOOR OR LANDING
- FP18 WATER CLOSET AND SHOWER TO HAVE REINFORCEMENT IN WALLS 2X8 NOMINAL AT 32" TO 39.5" ABOVE FINISH FLOOR. SEE FLOOR PLAN GENERAL NOTE #28 ON SHEET G0.2 FOR FURTHER INFORMATION. WHERE THE WATER CLOSET IS NOT PLACED ADJACENT TO A SIDE WALL CAPABLE OF ACCOMMODATING A GRAB BAR, THE BATHROOM SHALL HAVE PROVISIONS FOR INSTALLATION OF FLOOR-MOUNTED, FOLDAWAY OR SIMILAR ALTERNATE GRAB BAR REINFORCEMENTS APPROVED BY THE ENFORCING AGENCY.
- FP19 DOOR TO HAVE A NET CLEAR OPENING OF 32"
- FP20 DESIGNATED 2'- 6" x 2'- 6" x 7' TALL MINIMUM AREA FOR INSTALLATION OF AN ELECTRIC HYBRID HEAT PUMP WATER HEATER PER CEC 2022 SECTION 150.0(N)
- FP21 FURRING AS NEEDED FOR STANDARD TUB AND SHOWER LENGTH
- FP22 WATER HEATER TO BE STRAPPED TO WALL PER CRC 507.2 REQUIREMENTS

SOLAR READY NOTES

SOLAR READY ROOF AREA:
MIN DIMENSION > 5FT. MIN. SF. > 80SF.
PER CALIFORNIA ENERGY CODE SECTION 110.10(b)

THE SOLAR ZONE SHALL COMPLY WITH ACCESS, PATHWAY, SMOKE VENTILATION, AND SIPACING REQUIREMENTS AS SPECIFIED IN TILE 24, PART 9 OR OTHER PARTS OF TITLE 24 OR IN ANY REQUIREMENTS ADOPTED NY LOCAL JURISDICTION

SINGLE FAMILY RESIDENCE. THE SOLAR ZONE SHALL BE LOCATED ON THE ROOF OR OVERHANG OF THE BUILDING AND HAVE A TOTAL AREA OF NO LESS THAN 250SQFT.

FOR PHOTOVOLTAIC ARRAYS OCCUPYING NOT MORE THAN 33 PERCENT OF THE PLAN VIEW TOTAL ROOF AREA, NOT LESS THAN AN 18-INCH (457 MM) CLEAR SETBACK IS REQUIRED ON BOTH SIDES OF A HORIZONTAL RIDGE. FOR PHOTOVOLTAIC ARRAYS OCCUPYING MORE THAN 33 PERCENT OF THE PLAN VIEW TOTAL ROOF AREA, NOT LESS THAN A 36-INCH (914 MM) CLEAR SETBACK IS REQUIRED ON BOTH SIDES OF A HORIZONTAL RIDGE.

CAPACITY OF THE PV SYSTEMS PER THE INITIAL CF1R-PRF: 1.70 kWdc
TO BE UPDATED WITH SITE SPECIFIC NUMBERS.

VENTING CALCULATIONS

ROOF VENTING: 1SF. OF ROOF VENTING PER 150 SF. OF ENCLOSED AREA OR ENCLOSED RAFTER AREA.
ENCLOSED RAFTER AREA: 499 SF.
VENTILATION AREA REQUIRED: 499 SF./150SF.= 3.33 SF.
CONVERT TO SQ. IN: 3.33 SF. x 144 = 479 SQ. IN.
MINIMUM VENTILATION AREA REQUIRED: 479 SQ. IN.

LEGEND

- SECTION CUT
- ELEVATION CALLOUT
- DETAIL DRAWING REF.
- WALL BELOW OR ROOF ABOVE
- SOLAR ZONE. REFER TO SOLAR NOTES ON SHEET G0.2
- ROOFING
- X — KEYNOTE
- X — DOOR SYMBOL
- X — WINDOW SYMBOL
- X'-X" — CEILING HEIGHTS
- VARIES — VAULTED CEILING
- X:12 — ROOF SLOPE

FOR USE IN IN THE CITY OF PERRIS

DESIGN PATH STUDIO
architecture + engineering + planning
DESIGNPATHSTUDIO.COM

BY USING THESE PERMIT READY CONSTRUCTION DOCUMENTS, THE RECIPIENT ACKNOWLEDGES, ACCEPTS AND VOLUNTARILY AFFIRMS THE FOLLOWING CONDITIONS:
1. THE USE OF THIS INFORMATION IS RESTRICTED TO THE ORIGINAL PROJECT FOR WHICH IT WAS PREPARED FOR THE PERMIT READY ACCESSORY DWELLING UNIT (ADU) PROGRAM FOR THE CITY OF PERRIS ONLY. THIS IS A LIMITED SET OF STANDARDIZED ADU PLANS AND SPECIFICATIONS APPROVED BY THE CITY OF PERRIS BUILDING DEPARTMENT. BUILDING CODES DO CHANGE OVER TIME AND RECIPIENT SHALL ENSURE FULL COMPLIANCE UNDER ALL CODES THEN IN EFFECT AT THE TIME OF THE SUBJECT PERMIT. THIS DOES NOT ELIMINATE OR REDUCE THE RECIPIENT'S RESPONSIBILITY TO VERIFY ANY AND ALL INFORMATION RELEVANT TO THE RECIPIENT'S WORK AND RESPONSIBILITY ON THIS PROJECT. DESIGN PATH STUDIO SHALL NOT BE RESPONSIBLE FOR TRANSLATION ERRORS. DO NOT USE THESE CONSTRUCTION DOCUMENTS IF THE PERMIT HAS EXPIRED OR IS REVOKED AT ALL.
2. THE RECIPIENT RECOGNIZES AND ACKNOWLEDGES THAT THE USE OF THIS INFORMATION WILL BE AT THEIR SOLE RISK AND WITHOUT ANY LIABILITY OR LEGAL EXPOSURE TO DESIGN PATH STUDIO. NO WARRANTIES OF ANY NATURE, WHETHER EXPRESS OR IMPLIED, SHALL ATTACH TO THESE DOCUMENTS AND THE INFORMATION CONTAINED THEREON. ANY USE, REUSE, OR ALTERATION OF THESE DOCUMENTS BY THE RECIPIENT OR BY OTHERS WILL BE AT THE RECIPIENT'S RISK AND FULL LEGAL RESPONSIBILITY. FURTHERMORE, THE RECIPIENT WILL, TO THE FULLEST EXTENT PERMITTED BY LAW, DEFEND, INDEMNIFY AND HOLD DESIGN PATH STUDIO AND ITS ARCHITECTS HARMLESS FROM ANY AND ALL CLAIMS, SUITS, LIABILITY, DEMANDS, JUDGMENTS, OR COSTS ARISING OUT OF OR RESULTING THERE FROM ANY USE OF THESE CONSTRUCTION DOCUMENTS FOR OR ON ACCOUNT OF ANY INJURY, DEATH, DAMAGE OR LOSS TO PERSONS OR PROPERTY, DIRECT OR CONSEQUENTIAL DAMAGES IN ANY AMOUNT. THIS INDEMNITY DOES NOT APPLY TO THE SOLE NEGLIGENCE OR WILLFUL MISCONDUCT OF DESIGN PATH STUDIO OR ITS ARCHITECTS.
3. THE DESIGNS REPRESENTED BY THESE PLANS ARE COPYRIGHTED AND ARE SUBJECT TO COPYRIGHT PROTECTION.
4. IF THE RECIPIENT DOES NOT AGREE WITH THE ABOVE CONDITIONS, DO NOT PROCEED WITH CONSTRUCTION OF AN ADU OR OTHER IMPROVEMENT UNDER THESE PLANS AT ALL.

project
City of Perris
Pre-Approved
ADU Program

revisions
1

description
Floor Plan
Craftsman

date	4 April 2025
project no.	PERRIS PRADU
drawn by	DESIGN PATH STUDIO
sheet no.	A1.1

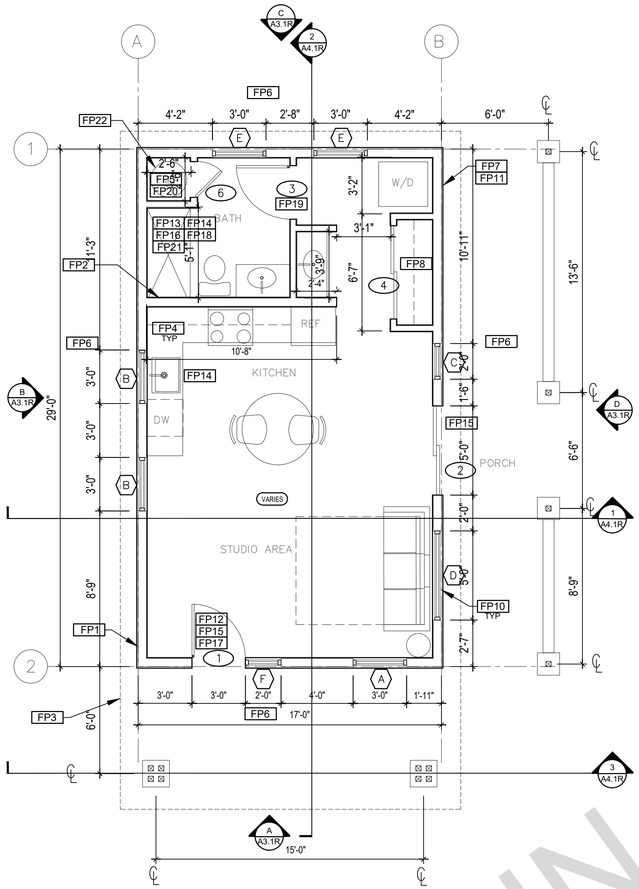

CRAFTSMAN FLOOR PLAN

1/4"=1'-0" 499 SQ. FT. STUDIO - REVERSE

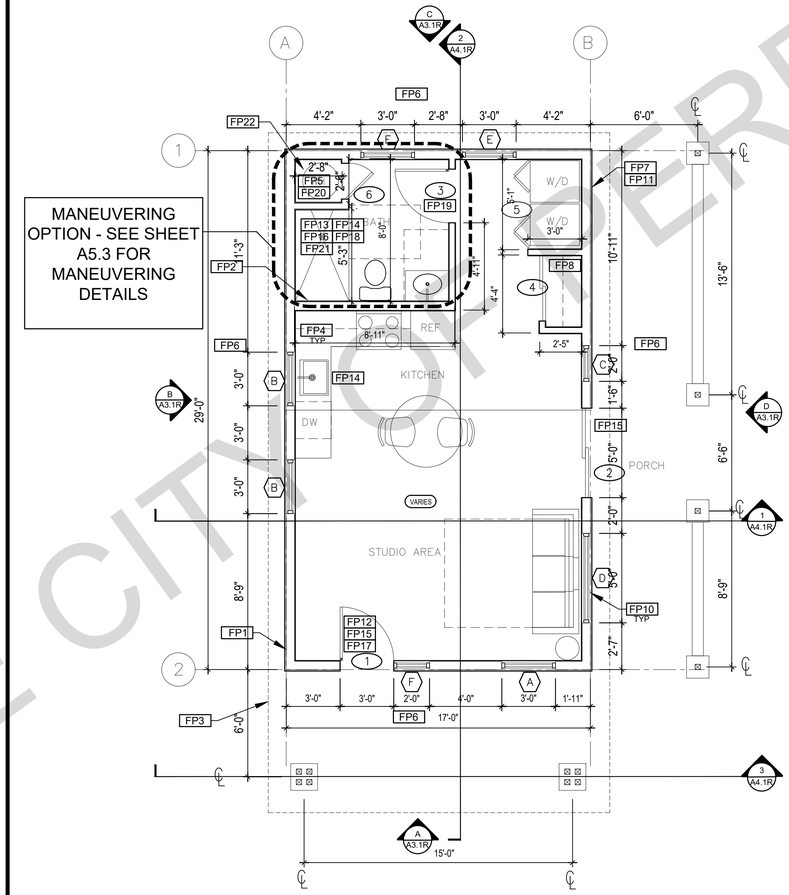

MANEUVERING OPTION

1/4"=1'-0" 499 SQ. FT. STUDIO - REVERSE

ROOF KEYNOTES

- RP1 LINE OF ROOF OVERHANG
- RP2 CLASS A ROOFING MATERIAL. SEE GENERAL ROOF NOTE 13 ON SHEET G0.2 ICC ESR_____
- RP3 SUPPORT POST BELOW
- RP4 LINE OF WALLS BELOW
- RP5 ROOF DOWNSPOUT LOCATION TO BE DETERMINED BY SITE SPECIFIC CONDITIONS. ROOF GUTTERS SHALL BE PROVIDED WITH THE MEANS TO PREVENT THE ACCUMULATION OF LEAVES AND DEBRIS IN THE GUTTER IN HIGH FIRE SEVERITY ZONES.
- RP6 DESIGNATED SOLAR PANEL AREA. PLEASE SEE SOLAR READY NOTES ON THIS SHEET
- RP7 RAFTER VENTS TO MEET REQUIRED VENTILATION AREA FOR ENCLOSED RAFTER SPACES. MAX ¼", MIN ⅛" OPENING SIZE ON VENT SCREEN WITH CORROSION-RESISTANT WIRE SCREEN MATERIAL. 1 SF OF VENTING PER 150 SF OF ENCLOSED RAFTER AREA IN NON-FIRE RATED CONSTRUCTION PLEASE SEE VENTING CALCULATIONS OF THIS SHEET

FLOOR PLAN KEYNOTES

- FP1 STUD WALL SIZED PER STRUCTURAL
- FP2 2X6 STUD WALL OR FURRING AS NEEDED FOR MECHANICAL / PLUMBING / VENTING
- FP3 LINE OF OVERHANG ABOVE
- FP4 36" HIGH COUNTER
- FP5 WATER HEATER
- FP6 SLOPE SURFACE AWAY FROM BUILDING
- FP7 DRYER VENT TERMINATION ON EXTERIOR WALL TO BE A MINIMUM OF 3 FT FROM ANY OPENING. DRYER VENT SHALL NOT TERMINATE WITHIN 3 FT FROM THE PROPERTY LINES
- FP8 CLOSET SHELF AND POLE
- FP9 EMERGENCY EGRESS WINDOW
- FP10 WINDOW MUST HAVE A FRAME AND SASH COMPRISED OF WELDED CORNERS, METAL REINFORCEMENT IN THE INTERLOCK AREA, AND CONSTRUCTED OF MULTIPANE TEMPERED GLAZING WHERE INDICATED TYPICAL ALL WINDOWS
- FP11 VENT DRYER THROUGH WALL. SEE MECHANICAL / PLUMBING PLANS FOR FURTHER INFORMATION
- FP12 MIN. 1 HINGED ENTRY DOOR FOR EGRESS COMPLIANCE REQUIRED - THE EGRESS DOOR SHALL BE SIDE-HNGED AND SHALL PROVIDE A CLEAR WIDTH OF NOT LESS THAN 32 INCHES WHERE MEASURED BETWEEN THE FACE OF THE DOOR AND THE STOP, WITH THE DOOR OPEN 90°. THE CLEAR HEIGHT OF THE DOOR OPENING SHALL BE NOT LESS THAN 78 INCHES IN HEIGHT MEASURED FROM THE TOP OF THE THRESHOLD TO THE BOTTOM OF THE STOP
- FP13 SHOWER ENCLOSURE MUST BE TEMPERED. GLAZING IN THE WALLS/DOORS FACING OR CONTAINING BATHTUBS, SHOWERS, HOT TUBS, SPAS, WHIRLPOOLS, SAUNAS, STEAM ROOMS AND INDOOR/OUTDOOR SWIMMING POOLS WHERE THE BOTTOM EXPOSED EDGE OF THE GLAZING IS LESS THAN 60" ABOVE THE STANDING SURFACE. EXCEPTION: GLAZING THAT IS MORE THAN 60", MEASURED HORIZONTALLY, FROM THE WATER'S EDGE OF A BATHTUB, HOT TUB, SPA, WHIRLPOOL OR SWIMMING POOL. SHOWER DOORS SHALL OPEN AS TO MAINTAIN NOT LESS THAN A 22-INCH UNOBSTRUCTED OPENING FOR EGRESS.
- FP14 PER SECTION 301.1.1 CALGREEN AND CIVIL CODE 1101.3(c), ALL PLUMBING FIXTURES SHALL BE COMPLIANT WATER -CONSERVING PLUMBING FIXTURES. SEE MECHANICAL / PLUMBING PLANS FOR FURTHER INFORMATION
- FP15 LANDING OR FLOOR REQUIRED AT EACH SIDE OF EXTERIOR DOOR. WIDTH TO BE NOT LESS THAN THE DOOR SERVED AND HAVE A MIN 36 INCH DEPTH MEASURED IN THE DIRECTION OF TRAVEL. EXTERIOR LANDINGS SHALL BE PERMITTED TO HAVE A SLOPE NOT TO EXCEED ¼" PER FOOT. (CRC 3111.3) LANDINGS OR FINISHED FLOORS AT EGRESS DOOR SHALL NOT BE MORE THAN 1.5" LOWER THAN THE TOP OF THE THRESHOLD FOR OUTWARD SWINGING DOORS OR 7.75" FOR DOORS THAT DO NOT SWING OUTWARD. (CRC 3111.3.1)
  DOORS OTHER THAN THE REQUIRED EGRESS DOOR SHALL BE PROVIDED WITH LANDINGS OR FLOORS NOT MORE THAN 7.75" BELOW THE TOP OF THE THRESHOLD (CRC 3111.3.2)
- FP16 WALL COVERING SHALL BE CEMENT PLASTER, TILE OR APPROVED EQUAL TO 72" ABOVE DRAIN AT SHOWERS OR TUB WITH SHOWERS. MATERIALS USED AS BACKERS FOR WALL TILE IN TUBE AND REINFORCED GYPSUM PANELS, NON-ASBESTOS FIBER CEMENT BACKER BOARD, OR NON-ASBESTOS FIBER CEMENT REINFORCED CEMENTITIOUS BACKER UNITS INSTALLED IN ACCORDANCE WITH MANUFACTURERS' RECOMMENDATIONS.
- FP17 DOOR BELL BUTTON TO BE NO MORE THEN 48" ABOVE EXTERIOR FLOOR OR LANDING
- FP18 WATER CLOSET AND SHOWER TO HAVE REINFORCEMENT IN WALLS 2X8 NOMINAL AT 32" TO 39.5" ABOVE FINISH FLOOR. SEE FLOOR PLAN GENERAL NOTE #28 ON SHEET G0.2 FOR FURTHER INFORMATION, WHERE THE WATER CLOSET IS NOT PLACED ADJACENT TO A SIDE WALL CAPABLE OF ACCOMMODATING A GRAB BAR, THE BATHROOM SHALL HAVE PROVISIONS FOR INSTALLATION OF FLOOR-MOUNTED, FOLDAWAY OR SIMILAR ALTERNATE GRAB BAR REINFORCEMENTS APPROVED BY THE ENFORCING AGENCY.
- FP19 DOOR TO HAVE A NET CLEAR OPENING OF 32"
- FP20 DESIGNATED 2'- 6" x 2'- 6" x 7" TALL MINIMUM AREA FOR INSTALLATION OF AN ELECTRIC HYBRID HEAT PUMP WATER HEATER PER CEC 2022 SECTION 150.0(N)
- FP21 FURRING AS NEEDED FOR STANDARD TUB AND SHOWER LENGTH
- FP22 WATER HEATER TO BE STRAPPED TO WALL PER CRC 507.2 REQUIREMENTS

SOLAR READY NOTES

SOLAR READY ROOF AREA:
MIN DIMENSION > 5FT. MIN. SF. > 80SF.
PER CALIFORNIA ENERGY CODE SECTION 110.10(b)

THE SOLAR ZONE SHALL COMPLY WITH ACCESS, PATHWAY, SMOKE VENTILATION, AND S[PACING REQUIREMENTS AS SPECIFIED IN TILE 24, PART 9 OR OTHER PARTS OF TITLE 24 OR IN ANY REQUIREMENTS ADOPTED NY LOCAL JURISDICTION

SINGLE FAMILY RESIDENCE. THE SOLAR ZONE SHALL BE LOCATED ON THE ROOF OR OVERHANG OF THE BUILDING AND HAVE A TOTAL AREA OF NO LESS THAN 250SQFT.

FOR PHOTOVOLTAIC ARRAYS OCCUPYING NOT MORE THAN 33 PERCENT OF THE PLAN VIEW TOTAL ROOF AREA, NOT LESS THAN AN 18-INCH (457 MM) CLEAR SETBACK IS REQUIRED ON BOTH SIDES OF A HORIZONTAL RIDGE. FOR PHOTOVOLTAIC ARRAYS OCCUPYING MORE THAN 33 PERCENT OF THE PLAN VIEW TOTAL ROOF AREA, NOT LESS THAN A 36-INCH (914 MM) CLEAR SETBACK IS REQUIRED ON BOTH SIDES OF A HORIZONTAL RIDGE.

CAPACITY OF THE PV SYSTEMS PER THE INITIAL CF1R-PRF:_____1.70 kWdc_____
TO BE UPDATED WITH SITE SPECIFIC NUMBERS.

VENTING CALCULATIONS

ROOF VENTING: 1SF. OF ROOF VENTING PER 150 SF. OF ENCLOSED AREA OR ENCLOSED RAFTER AREA.
ENCLOSED RAFTER AREA: __499__ SF.
VENTILATION AREA REQUIRED: __499__SF./150SF.= __3.33__SF.
CONVERT TO SQ. IN: __3.33 SF. x 144 = __479__ SQ. IN.
MINIMUM VENTILATION AREA REQUIRED: __479__SQ. IN.

LEGEND

- SECTION CUT
- ELEVATION CALLOUT
- DETAIL DRAWING REF.
- WALL BELOW OR ROOF ABOVE
- SOLAR ZONE. REFER TO SOLAR NOTES ON SHEET G0.2
- ROOFING
- X — KEYNOTE
- X — DOOR SYMBOL
- X — WINDOW SYMBOL
- X'-X" — CEILING HEIGHTS
- VARIES — VAULTED CEILING
- X:12 — ROOF SLOPE

FOR USE IN IN THE CITY OF PERRIS

DESIGN PATH STUDIO
architecture + engineering + planning
DESIGNPATHSTUDIO.COM

BY USING THESE PERMIT READY CONSTRUCTION DOCUMENTS, THE RECIPIENT ACKNOWLEDGES, ACCEPTS AND VOLUNTARILY AFFIRMS THE FOLLOWING CONDITIONS:
1. THE USE OF THIS INFORMATION IS RESTRICTED TO THE ORIGINAL PROJECT FOR WHICH IT WAS PREPARED FOR THE PERMIT READY ACCESSORY DWELLING UNIT (ADU) PROGRAM FOR THE CITY OF PERRIS ONLY. THIS IS A LIMITED SET OF STANDARDIZED ADU PLANS AND SPECIFICATIONS APPROVED BY THE CITY OF PERRIS BUILDING DEPARTMENT. BUILDING CODES DO CHANGE OVER TIME AND RECIPIENT SHALL ENSURE FULL COMPLIANCE UNDER ALL CODES THEN IN EFFECT AT THE TIME OF THE SUBJECT PERMIT. THIS DOES NOT ELIMINATE OR REDUCE THE RECIPIENT'S RESPONSIBILITY TO VERFY ANY AND ALL INFORMATION RELEVANT TO THE RECIPIENT'S WORK AND RESPONSIBILITY ON THIS PROJECT. DESIGN PATH STUDIO SHALL NOT BE RESPONSIBLE FOR TRANSLATION ERRORS. DO NOT USE THESE CONSTRUCTION DOCUMENTS IF THE PERMIT HAS EXPIRED OR IS REVOKED AT ALL.
2. THE RECIPIENT RECOGNIZES AND ACKNOWLEDGES THAT THE USE OF THIS INFORMATION WILL BE AT THEIR SOLE RISK AND WITHOUT ANY LIABILITY OR LEGAL EXPOSURE TO DESIGN PATH STUDIO. NO WARRANTIES OF ANY NATURE, WHETHER EXPRESS OR IMPLIED, SHALL ATTACH TO THESE DOCUMENTS AND THE INFORMATION CONTAINED THEREON. ANY USE, REUSE, OR ALTERATION OF THESE DOCUMENTS BY THE RECIPIENT OR BY OTHERS WLL BE AT THE RECIPIENT'S RISK AND FULL LEGAL RESPONSIBILITY. FURTHERMORE, THE RECIPIENT WILL, TO THE FULLEST EXTENT PERMITTED BY LAW, DEFEND, INDEMNIFY AND HOLD DESIGN PATH STUDIO AND ITS ARCHITECTS HARMLESS FROM ANY AND ALL CLAIMS, SUITS, LIABILITY, DEMANDS, JUDGMENTS, OR COSTS ARISING OUT OF OR RESULTING THERE FROM ANY USE OF THESE CONSTRUCTION DOCUMENTS FOR OR ON ACCOUNT OF ANY INJURY, DEATH, DAMAGE OR LOSS TO PERSONS OR PROPERTY, DIRECT OR CONSEQUENTIAL DAMAGES IN ANY AMOUNT. THIS INDEMNITY DOES NOT APPLY TO THE SOLE NEGLIGENCE OR WILLFUL MISCONDUCT OF DESIGN PATH STUDIO OR ITS ARCHITECTS.
3. THE DESIGNS REPRESENTED BY THESE PLANS ARE COPYRIGHTED AND ARE SUBJECT TO COPYRIGHT PROTECTION.
4. IF THE RECIPIENT DOES NOT AGREE WITH THE ABOVE CONDITIONS, DO NOT PROCEED WITH CONSTRUCTION OF AN ADU OR OTHER IMPROVEMENT UNDER THESE PLANS AT ALL.

project
City of Perris
Pre-Approved
ADU Program

revisions
1

description
Floor Plan
Craftsman
Reverse

date 4 April 2025
project no. PERRIS PRADU
drawn by DESIGN PATH STUDIO
sheet no. A1.1R

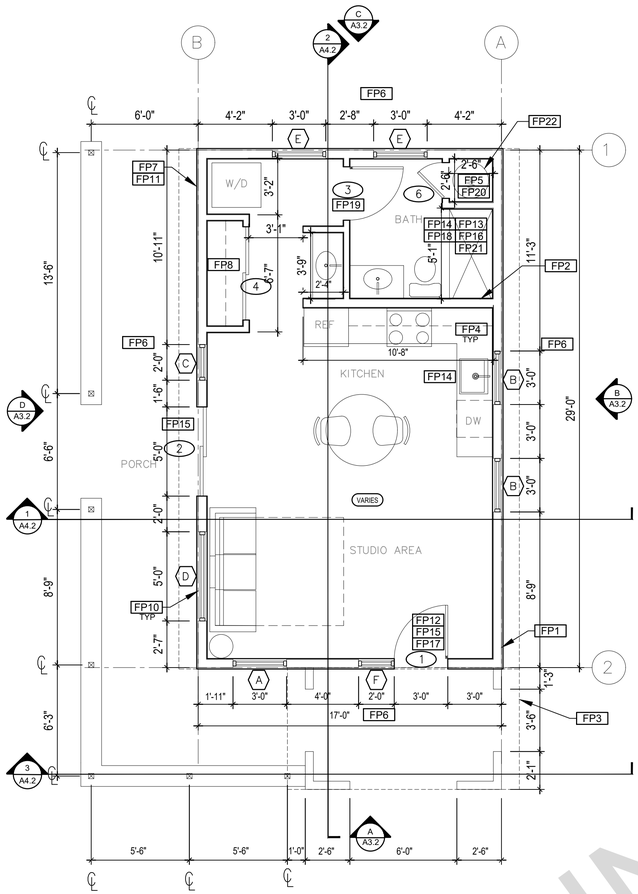

SPANISH FLOOR PLAN

1/4"=1'-0" 499 SQ. FT. STUDIO

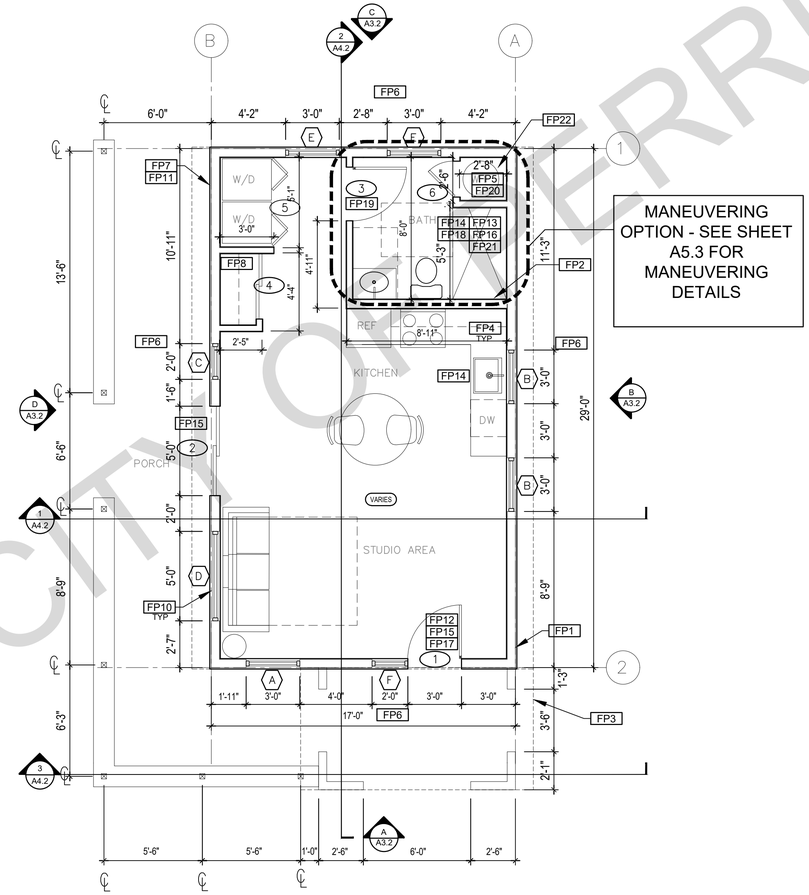

MANEUVERING OPTION

1/4"=1'-0" 499 SQ. FT. STUDIO

FOR USE IN IN THE CITY OF PERRIS

ROOF KEYNOTES

- RP1 LINE OF ROOF OVERHANG
- RP2 CLASS A ROOFING MATERIAL. SEE GENERAL ROOF NOTE 13 ON SHEET G0.2 ICC ESR_____
- RP3 SUPPORT POST BELOW
- RP4 LINE OF WALLS BELOW
- RP5 ROOF DOWNSPOUT LOCATION TO BE DETERMINED BY SITE SPECIFIC CONDITIONS. ROOF GUTTERS SHALL BE PROVIDED WITH THE MEANS TO PREVENT THE ACCUMULATION OF LEAVES AND DEBRIS IN THE GUTTER IN HIGH FIRE SEVERITY ZONES.
- RP6 DESIGNATED SOLAR PANEL AREA. PLEASE SEE SOLAR READY NOTES ON THIS SHEET
- RP7 RAFTER VENTS TO MEET REQUIRED VENTILATION AREA FOR ENCLOSED RAFTER SPACES. MAX ¼", MIN ⅛" OPENING SIZE ON VENT SCREEN WITH CORROSION-RESISTANT WIRE SCREEN MATERIAL. 1 SF OF VENTING PER 150 SF OF ENCLOSED RAFTER AREA IN NON-FIRE RATED CONSTRUCTION PLEASE SEE VENTING CALCULATIONS OF THIS SHEET

FLOOR PLAN KEYNOTES

- FP1 STUD WALL SIZED PER STRUCTURAL
- FP2 2X6 STUD WALL OR FURRING AS NEEDED FOR MECHANICAL / PLUMBING / VENTING
- FP3 LINE OF OVERHANG ABOVE
- FP4 36" HIGH COUNTER
- FP5 WATER HEATER
- FP6 SLOPE SURFACE AWAY FROM BUILDING
- FP7 DRYER VENT TERMINATION ON EXTERIOR WALL TO BE A MINIMUM OF 3 FT FROM ANY OPENING. DRYER VENT SHALL NOT TERMINATE WITHIN 3 FT FROM THE PROPERTY LINES
- FP8 CLOSET SHELF AND POLE
- FP9 EMERGENCY EGRESS WINDOW
- FP10 WINDOW MUST HAVE A FRAME AND SASH COMPRISED OF WELDED CORNERS, METAL REINFORCEMENT IN THE INTERLOCK AREA, AND CONSTRUCTED OF MULTIPANE TEMPERED GLAZING WHERE INDICATED TYPICAL ALL WINDOWS
- FP11 VENT DRYER THROUGH WALL. SEE MECHANICAL / PLUMBING PLANS FOR FURTHER INFORMATION
- FP12 MIN. 1 HINGED ENTRY DOOR FOR EGRESS COMPLIANCE REQUIRED - THE EGRESS DOOR SHALL BE SIDE-HINGED AND SHALL PROVIDE A CLEAR WIDTH OF NOT LESS THAN 32 INCHES WHERE MEASURED BETWEEN THE FACE OF THE DOOR AND THE STOP, WITH THE DOOR OPEN 90°. THE CLEAR HEIGHT OF THE DOOR OPENING SHALL BE NOT LESS THAN 78 INCHES IN HEIGHT MEASURED FROM THE TOP OF THE THRESHOLD TO THE BOTTOM OF THE STOP
- FP13 SHOWER ENCLOSURE MUST BE TEMPERED. GLAZING IN THE WALLS/DOORS FACING OR CONTAINING BATHTUBS, SHOWERS, HOT TUBS, SPAS, WHIRLPOOLS, SAUNAS, STEAM ROOMS OR INDOOR/OUTDOOR SWIMMING POOLS WHERE THE BOTTOM EXPOSED EDGE OF THE GLAZING IS LESS THAN 60" ABOVE THE STANDING SURFACE. EXCEPTION: GLAZING THAT IS MORE THAN 60", MEASURED HORIZONTALLY, FROM THE WATER'S EDGE OF A BATHTUB, HOT TUB, SPA, WHIRLPOOL OR SWIMMING POOL. SHOWER DOORS SHALL OPEN AS TO MAINTAIN NOT LESS THAN A 22-INCH UNOBSTRUCTED OPENING FOR EGRESS.
- FP14 PER SECTION 301.1.1 CALGREEN AND CIVIL CODE 1101.3(c), ALL PLUMBING FIXTURES SHALL BE COMPLIANT WATER -CONSERVING PLUMBING FIXTURES. SEE MECHANICAL / PLUMBING PLANS FOR FURTHER INFORMATION
- FP15 LANDING OR FLOOR REQUIRED AT EACH SIDE OF EXTERIOR DOOR. WIDTH TO BE NOT LESS THAN THE DOOR SERVED AND HAVE A MIN 36 INCH DEPTH MEASURED IN THE DIRECTION OF TRAVEL. EXTERIOR LANDINGS SHALL BE PERMITTED TO HAVE A SLOPE NOT TO EXCEED ¼" PER FOOT, (CRC 3111.3) LANDINGS OR FINISHED FLOORS AT EGRESS DOOR SHALL NOT BE MORE THAN 1.5" LOWER THAN THE TOP OF THE THRESHOLD FOR OUTWARD SWINGING DOORS OR 7.75" FOR DOORS THAT DO NOT SWING OUTWARD. (CRC 3111.3.1) DOORS OTHER THAN THE REQUIRED EGRESS DOOR SHALL BE PROVIDED WITH LANDINGS OR FLOORS NOT MORE THAN 7.75" BELOW THE TOP OF THE THRESHOLD (CRC 3111.3.2)
- FP16 WALL COVERING SHALL BE CEMENT PLASTER, TILE OR APPROVED EQUAL TO 72" ABOVE DRAIN AT SHOWERS OR TUB WITH SHOWERS. MATERIALS USED AS BACKERS FOR WALL TILE IN TUBE AND REINFORCED GYPSUM PANELS, NON-ASBESTOS FIBER CEMENT BACKER BOARD, OR NON-ASBESTOS FIBER CEMENT REINFORCED CEMENTITIOUS BACKER UNITS INSTALLED IN ACCORDANCE WITH MANUFACTURERS' RECOMMENDATIONS.
- FP17 DOOR BELL BUTTON TO BE NO MORE THEN 48" ABOVE EXTERIOR FLOOR OR LANDING
- FP18 WATER CLOSET AND SHOWER TO HAVE REINFORCEMENT IN WALLS 2X8 NOMINAL AT 32" TO 39.5" ABOVE FINISH FLOOR. SEE FLOOR PLAN GENERAL NOTE #28 ON SHEET G0.2 FOR FURTHER INFORMATION. WHERE THE WATER CLOSET IS NOT PLACED ADJACENT TO A SIDE WALL CAPABLE OF ACCOMMODATING A GRAB BAR, THE BATHROOM SHALL HAVE PROVISIONS FOR INSTALLATION OF FLOOR-MOUNTED, FOLDAWAY OR SIMILAR ALTERNATE GRAB BAR REINFORCEMENTS APPROVED BY THE ENFORCING AGENCY.
- FP19 DOOR TO HAVE A NET CLEAR OPENING OF 32"
- FP20 DESIGNATED 2'- 6" x 2'- 6" x 7' TALL MINIMUM AREA FOR INSTALLATION OF AN ELECTRIC HYBRID HEAT PUMP WATER HEATER PER CEC 2022 SECTION 150.0(N)
- FP21 FURRING AS NEEDED FOR STANDARD TUB AND SHOWER LENGTH
- FP22 WATER HEATER TO BE STRAPPED TO WALL PER CRC 507.2 REQUIREMENTS

SOLAR READY NOTES

SOLAR READY ROOF AREA:
MIN DIMENSION > 5FT. MIN. SF. > 80SF.
PER CALIFORNIA ENERGY CODE SECTION 110.10(b)

THE SOLAR ZONE SHALL COMPLY WITH ACCESS, PATHWAY, SMOKE VENTILATION, AND SIPACING REQUIREMENTS AS SPECIFIED IN TILE 24, PART 9 OR OTHER PARTS OF TITLE 24 OR IN ANY REQUIREMENTS ADOPTED NY LOCAL JURSDICTION

SINGLE FAMILY RESIDENCE. THE SOLAR ZONE SHALL BE LOCATED ON THE ROOF OR OVERHANG OF THE BUILDING AND HAVE A TOTAL AREA OF NO LESS THAN 250SQFT.

FOR PHOTOVOLTAIC ARRAYS OCCUPYING NOT MORE THAN 33 PERCENT OF THE PLAN VIEW TOTAL ROOF AREA, NOT LESS THAN AN 18-INCH (457 MM) CLEAR SETBACK IS REQUIRED ON BOTH SIDES OF A HORIZONTAL RIDGE. FOR PHOTOVOLTAIC ARRAYS OCCUPYING MORE THAN 33 PERCENT OF THE PLAN VIEW TOTAL ROOF AREA, NOT LESS THAN A 36-INCH (914 MM) CLEAR SETBACK IS REQUIRED ON BOTH SIDES OF A HORIZONTAL RIDGE.

CAPACITY OF THE PV SYSTEMS PER THE INITIAL CF1R-PRF:_____1.70 kWdc_____
TO BE UPDATED WITH SITE SPECIFIC NUMBERS.

VENTING CALCULATIONS

ROOF VENTING: 1SF. OF ROOF VENTING PER 150 SF. OF ENCLOSED AREA OR ENCLOSED RAFTER AREA
ENCLOSED RAFTER AREA: __499__ SF.
VENTILATION AREA REQUIRED: __499__SF./150SF.=__3.33__SF.
CONVERT TO SQ. IN: __3.33__SF. x 144 = __479__ SQ. IN.
MINIMUM VENTILATION AREA REQUIRED: __479__ SQ. IN.

LEGEND

- SECTION CUT
- ELEVATION CALLOUT
- DETAIL DRAWING REF.
- WALL BELOW OR ROOF ABOVE
- SOLAR ZONE. REFER TO SOLAR NOTES ON SHEET G0.2
- ROOFING
- X — KEYNOTE
- X — DOOR SYMBOL
- X — WINDOW SYMBOL
- X'-X" — CEILING HEIGHTS
- VARIES — VAULTED CEILING
- X:12 — ROOF SLOPE

DESIGN PATH STUDIO
architecture + engineering + planning
DESIGNPATHSTUDIO.COM

BY USING THESE PERMIT READY CONSTRUCTION DOCUMENTS, THE RECIPIENT ACKNOWLEDGES, ACCEPTS AND VOLUNTARILY AFFIRMS THE FOLLOWING CONDITIONS:
1. THE USE OF THIS INFORMATION IS RESTRICTED TO THE ORIGINAL PROJECT FOR WHICH IT WAS PREPARED FOR THE PERMIT READY ACCESSORY DWELLING UNIT (ADU) PROGRAM FOR THE CITY OF PERRIS ONLY. THIS IS A LIMITED SET OF STANDARDIZED ADU PLANS AND SPECIFICATIONS APPROVED BY THE CITY OF PERRIS BUILDING DEPARTMENT. BUILDING CODES DO CHANGE OVER TIME AND RECIPIENT SHALL ENSURE FULL COMPLIANCE UNDER ALL CODES THEN IN EFFECT AT THE TIME OF THE SUBJECT PERMIT. THIS DOES NOT ELIMINATE OR REDUCE THE RECIPIENT'S RESPONSIBILITY TO VERIFY ANY AND ALL INFORMATION RELEVANT TO THE RECIPIENT'S WORK AND RESPONSIBILITY ON THIS PROJECT. DESIGN PATH STUDIO SHALL NOT BE RESPONSIBLE FOR TRANSLATION ERRORS. DO NOT USE THESE CONSTRUCTION DOCUMENTS IF THE PERMIT HAS EXPIRED OR IS REVOKED AT ALL.
2. THE RECIPIENT RECOGNIZES AND ACKNOWLEDGES THAT THE USE OF THIS INFORMATION WILL BE AT THEIR SOLE RISK AND WITHOUT ANY LIABILITY OR LEGAL EXPOSURE TO DESIGN PATH STUDIO. NO WARRANTIES OF ANY NATURE, WHETHER EXPRESS OR IMPLIED, SHALL ATTACH TO THESE DOCUMENTS AND THE INFORMATION CONTAINED THEREON. ANY USE, REUSE, OR ALTERATION OF THESE DOCUMENTS BY THE RECIPIENT OR BY OTHERS WILL BE AT THE RECIPIENT'S RISK AND FULL LEGAL RESPONSIBILITY. FURTHERMORE, THE RECIPIENT WILL, TO THE FULLEST EXTENT PERMITTED BY LAW, DEFEND, INDEMNIFY AND HOLD DESIGN PATH STUDIO AND ITS ARCHITECTS HARMLESS FROM ANY AND ALL CLAIMS, SUITS, LIABILITY, DEMANDS, JUDGMENTS, OR COSTS ARISING OUT OF OR RESULTING THERE FROM ANY USE OF THESE CONSTRUCTION DOCUMENTS FOR OR ON ACCOUNT OF ANY INJURY, DEATH, DAMAGE OR LOSS TO PERSONS OR PROPERTY, DIRECT OR CONSEQUENTIAL DAMAGES IN ANY AMOUNT. THIS INDEMNITY DOES NOT APPLY TO THE SOLE NEGLIGENCE OR WILLFUL MISCONDUCT OF DESIGN PATH STUDIO OR ITS ARCHITECTS.
3. THE DESIGNS REPRESENTED BY THESE PLANS ARE COPYRIGHTED AND ARE SUBJECT TO COPYRIGHT PROTECTION.
4. IF THE RECIPIENT DOES NOT AGREE WITH THE ABOVE CONDITIONS, DO NOT PROCEED WITH CONSTRUCTION OF AN ADU OR OTHER IMPROVEMENT UNDER THESE PLANS AT ALL.

project
City of Perris Pre-Approved ADU Program

revisions
0

description
Floor Plan Spanish

date	4 April 2025
project no.	PERRIS PRADU
drawn by	DESIGN PATH STUDIO
sheet no.	A1.2

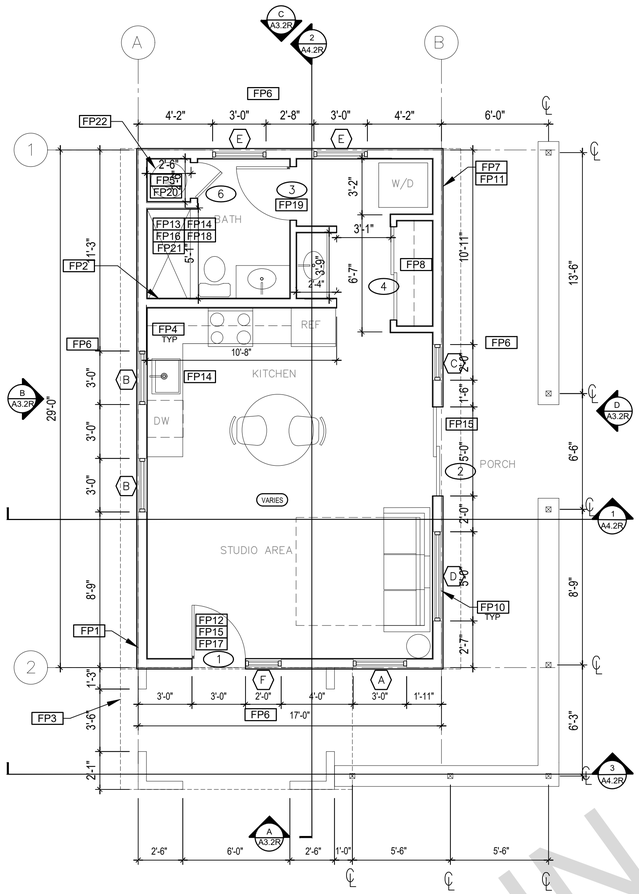

SPANISH FLOOR PLAN

1/4"=1'-0" 499 SQ. FT. STUDIO - REVERSE

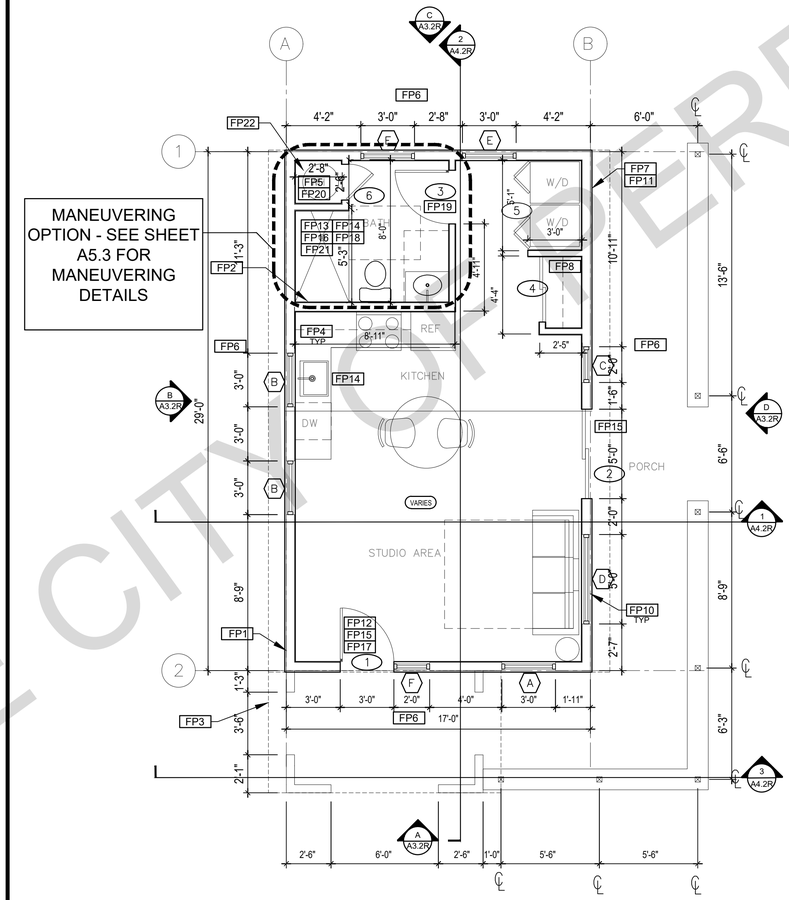

MANEUVERING OPTION

1/4"=1'-0" 499 SQ. FT. STUDIO - REVERSE

FOR USE IN IN THE CITY OF PERRIS

ROOF KEYNOTES

- RP1 LINE OF ROOF OVERHANG
- RP2 CLASS A ROOFING MATERIAL. SEE GENERAL ROOF NOTE 13 ON SHEET G0.2 ICC ESR_____
- RP3 SUPPORT POST BELOW
- RP4 LINE OF WALLS BELOW
- RP5 ROOF DOWNSPOUT LOCATION TO BE DETERMINED BY SITE SPECIFIC CONDITIONS. ROOF GUTTERS SHALL BE PROVIDED WITH THE MEANS TO PREVENT THE ACCUMULATION OF LEAVES AND DEBRIS IN THE GUTTER IN HIGH FIRE SEVERITY ZONES.
- RP6 DESIGNATED SOLAR PANEL AREA. PLEASE SEE SOLAR READY NOTES ON THIS SHEET
- RP7 RAFTER VENTS TO MEET REQUIRED VENTILATION AREA FOR ENCLOSED RAFTER SPACES. MAX ¼", MIN ⅛" OPENING SIZE ON VENT SCREEN WITH CORROSION-RESISTANT WIRE SCREEN MATERIAL. 1 SF OF VENTING PER 150 SF OF ENCLOSED RAFTER AREA IN NON-FIRE RATED CONSTRUCTION PLEASE SEE VENTING CALCULATIONS OF THIS SHEET

FLOOR PLAN KEYNOTES

- FP1 STUD WALL SIZED PER STRUCTURAL
- FP2 2X6 STUD WALL OR FURRING AS NEEDED FOR MECHANICAL / PLUMBING / VENTING
- FP3 LINE OF OVERHANG ABOVE
- FP4 36" HIGH COUNTER
- FP5 WATER HEATER
- FP6 SLOPE SURFACE AWAY FROM BUILDING
- FP7 DRYER VENT TERMINATION ON EXTERIOR WALL TO BE A MINIMUM OF 3 FT FROM ANY OPENING. DRYER VENT SHALL NOT TERMINATE WITHIN 3 FT FROM THE PROPERTY LINES
- FP8 CLOSET SHELF AND POLE
- FP9 EMERGENCY EGRESS WINDOW
- FP10 WINDOW MUST HAVE A FRAME AND SASH COMPRISED OF WELDED CORNERS, METAL REINFORCEMENT IN THE INTERLOCK AREA, AND CONSTRUCTED OF MULTIPANE TEMPERED GLAZING WHERE INDICATED TYPICAL ALL WINDOWS
- FP11 VENT DRYER THROUGH WALL. SEE MECHANICAL / PLUMBING PLANS FOR FURTHER INFORMATION
- FP12 MIN. 1 HINGED ENTRY DOOR FOR EGRESS COMPLIANCE REQUIRED - THE EGRESS DOOR SHALL BE SIDE-HINGED AND SHALL PROVIDE A CLEAR WIDTH OF NOT LESS THAN 32 INCHES WHERE MEASURED BETWEEN THE FACE OF THE DOOR AND THE STOP, WITH THE DOOR OPEN 90°. THE CLEAR HEIGHT OF THE DOOR OPENING SHALL BE NOT LESS THAN 78 INCHES IN HEIGHT MEASURED FROM THE TOP OF THE THRESHOLD TO THE BOTTOM OF THE STOP
- FP13 SHOWER ENCLOSURE MUST BE TEMPERED. GLAZING IN THE WALLS/DOORS FACING OR CONTAINING BATHTUBS, SHOWERS, HOT TUBS, SPAS, WHIRLPOOLS, SAUNAS, STEAM ROOMS AND INDOOR/OUTDOOR SWIMMING POOLS WHERE THE BOTTOM EXPOSED EDGE OF THE GLAZING IS LESS THAN 60" ABOVE THE STANDING SURFACE. EXCEPTION: GLAZING THAT IS MORE THAN 60", MEASURED HORIZONTALLY, FROM THE WATER'S EDGE OF A BATHTUB, HOT TUB, SPA, WHIRLPOOL OR SWIMMING POOL. SHOWER DOORS SHALL OPEN AS TO MAINTAIN NOT LESS THAN A 22-INCH UNOBSTRUCTED OPENING FOR EGRESS.
- FP14 PER SECTION 301.1.1 CALGREEN AND CIVIL CODE 1101.3(c), ALL PLUMBING FIXTURES SHALL BE COMPLIANT WATER -CONSERVING PLUMBING FIXTURES. SEE MECHANICAL / PLUMBING PLANS FOR FURTHER INFORMATION
- FP15 LANDING OR FLOOR REQUIRED AT EACH SIDE OF EXTERIOR DOOR. WIDTH TO BE NOT LESS THAN THE DOOR SERVED AND HAVE A MIN 36 INCH DEPTH MEASURED IN THE DIRECTION OF TRAVEL. EXTERIOR LANDINGS SHALL BE PERMITTED TO HAVE A SLOPE NOT TO EXCEED ¼" PER FOOT, (CRC 3111.3) LANDINGS OR FINISHED FLOORS AT EGRESS DOOR SHALL NOT BE MORE THAN 1.5" LOWER THAN THE TOP OF THE THRESHOLD FOR OUTWARD SWINGING DOORS OR 7.75" FOR DOORS THAT DO NOT SWING OUTWARD. (CRC 3111.3.1) DOORS OTHER THAN THE REQUIRED EGRESS DOOR SHALL BE PROVIDED WITH LANDINGS OR FLOORS NOT MORE THAN 7.75" BELOW THE TOP OF THE THRESHOLD (CRC 3111.3.2)
- FP16 WALL COVERING SHALL BE CEMENT PLASTER, TILE OR APPROVED EQUAL TO 72" ABOVE DRAIN AT SHOWERS OR TUB WITH SHOWERS. MATERIALS USED AS BACKERS FOR WALL TILE IN TUBE AND REINFORCED GYPSUM PANELS, NON-ASBESTOS FIBER CEMENT BACKER BOARD, OR NON-ASBESTOS FIBER CEMENT REINFORCED CEMENTITIOUS BACKER UNITS INSTALLED IN ACCORDANCE WITH MANUFACTURERS' RECOMMENDATIONS.
- FP17 DOOR BELL BUTTON TO BE NO MORE THEN 48" ABOVE EXTERIOR FLOOR OR LANDING
- FP18 WATER CLOSET AND SHOWER TO HAVE REINFORCEMENT IN WALLS 2X8 NOMINAL AT 32" TO 39.5" ABOVE FINISH FLOOR. SEE FLOOR PLAN GENERAL NOTE #28 ON SHEET G0.2 FOR FURTHER INFORMATION. WHERE THE WATER CLOSET IS NOT PLACED ADJACENT TO A SIDE WALL CAPABLE OF ACCOMMODATING A GRAB BAR, THE BATHROOM SHALL HAVE PROVISIONS FOR INSTALLATION OF FLOOR-MOUNTED, FOLDAWAY OR SIMILAR ALTERNATE GRAB BAR REINFORCEMENTS APPROVED BY THE ENFORCING AGENCY.
- FP19 DOOR TO HAVE A NET CLEAR OPENING OF 32"
- FP20 DESIGNATED 2'- 6" x 2'- 6" x 7' TALL MINIMUM AREA FOR INSTALLATION OF AN ELECTRIC HYBRID HEAT PUMP WATER HEATER PER CEC 2022 SECTION 150.0(N)
- FP21 FURRING AS NEEDED FOR STANDARD TUB AND SHOWER LENGTH
- FP22 WATER HEATER TO BE STRAPPED TO WALL PER CRC 507.2 REQUIREMENTS

SOLAR READY NOTES

SOLAR READY ROOF AREA:
MIN DIMENSION > 5FT. MIN. SF. > 80SF.
PER CALIFORNIA ENERGY CODE SECTION 110.10(b)

THE SOLAR ZONE SHALL COMPLY WITH ACCESS, PATHWAY, SMOKE VENTILATION, AND SIPACING REQUIREMENTS AS SPECIFIED IN TILE 24, PART 9 OR OTHER PARTS OF TITLE 24 OR IN ANY REQUIREMENTS ADOPTED NY LOCAL JURSDICTION

SINGLE FAMILY RESIDENCE. THE SOLAR ZONE SHALL BE LOCATED ON THE ROOF OR OVERHANG OF THE BUILDING AND HAVE A TOTAL AREA OF NO LESS THAN 250SQFT.

FOR PHOTOVOLTAIC ARRAYS OCCUPYING NOT MORE THAN 33 PERCENT OF THE PLAN VIEW TOTAL ROOF AREA, NOT LESS THAN AN 18-INCH (457 MM) CLEAR SETBACK IS REQUIRED ON BOTH SIDES OF A HORIZONTAL RIDGE. FOR PHOTOVOLTAIC ARRAYS OCCUPYING MORE THAN 33 PERCENT OF THE PLAN VIEW TOTAL ROOF AREA, NOT LESS THAN A 36-INCH (914 MM) CLEAR SETBACK IS REQUIRED ON BOTH SIDES OF A HORIZONTAL RIDGE.

CAPACITY OF THE PV SYSTEMS PER THE INITIAL CF1R-PRF:_____1.70 kWdc_____
TO BE UPDATED WITH SITE SPECIFIC NUMBERS.

VENTING CALCULATIONS

ROOF VENTING: 1SF. OF ROOF VENTING PER 150 SF. OF ENCLOSED AREA OR ENCLOSED RAFTER AREA
ENCLOSED RAFTER AREA: __499__ SF.
VENTILATION AREA REQUIRED: __499__SF./150SF.= __3.33__ SF.
CONVERT TO SQ. IN: __3.33__SF. x 144 = ____479____ SQ. IN.
MINIMUM VENTILATION AREA REQUIRED: __479__ SQ. IN.

LEGEND

- SECTION CUT
- ELEVATION CALLOUT
- DETAIL DRAWING REF.
- WALL BELOW OR ROOF ABOVE
- SOLAR ZONE. REFER TO SOLAR NOTES ON SHEET G0.2
- ROOFING
- X — KEYNOTE
- X — DOOR SYMBOL
- X — WINDOW SYMBOL
- X'-X" — CEILING HEIGHTS
- VARIES — VAULTED CEILING
- X:12 — ROOF SLOPE

DESIGN PATH STUDIO
architecture + engineering + planning
DESIGNPATHSTUDIO.COM

BY USING THESE PERMIT READY CONSTRUCTION DOCUMENTS, THE RECIPIENT ACKNOWLEDGES, ACCEPTS AND VOLUNTARILY AFFIRMS THE FOLLOWING CONDITIONS:
1. THE USE OF THIS INFORMATION IS RESTRICTED TO THE ORIGINAL PROJECT FOR WHICH IT WAS PREPARED FOR THE PERMIT READY ACCESSORY DWELLING UNIT (ADU) PROGRAM FOR THE CITY OF PERRIS ONLY. THIS IS A LIMITED SET OF STANDARDIZED ADU PLANS AND SPECIFICATIONS APPROVED BY THE CITY OF PERRIS BUILDING DEPARTMENT. BUILDING CODES DO CHANGE OVER TIME AND RECIPIENT SHALL ENSURE FULL COMPLIANCE UNDER ALL CODES THEN IN EFFECT AT THE TIME OF THE SUBJECT PERMIT. THIS DOES NOT ELIMINATE OR REDUCE THE RECIPIENT'S RESPONSIBILITY TO VERIFY ANY AND ALL INFORMATION RELEVANT TO THE RECIPIENT'S WORK AND RESPONSIBILITY ON THIS PROJECT. DESIGN PATH STUDIO SHALL NOT BE RESPONSIBLE FOR TRANSLATION ERRORS. DO NOT USE THESE CONSTRUCTION DOCUMENTS IF THE PERMIT HAS EXPIRED OR IS REVOKED AT ALL.
2. THE RECIPIENT RECOGNIZES AND ACKNOWLEDGES THAT THE USE OF THIS INFORMATION WILL BE AT THEIR SOLE RISK AND WITHOUT ANY LIABILITY OR LEGAL EXPOSURE TO DESIGN PATH STUDIO. NO WARRANTIES OF ANY NATURE, WHETHER EXPRESS OR IMPLIED, SHALL ATTACH TO THESE DOCUMENTS AND THE INFORMATION CONTAINED THEREON. ANY USE, REUSE, OR ALTERATION OF THESE DOCUMENTS BY THE RECIPIENT OR BY OTHERS WILL BE AT THE RECIPIENT'S RISK AND FULL LEGAL RESPONSIBILITY. FURTHERMORE, THE RECIPIENT WILL, TO THE FULLEST EXTENT PERMITTED BY LAW, DEFEND, INDEMNIFY AND HOLD DESIGN PATH STUDIO AND ITS ARCHITECTS HARMLESS FROM ANY AND ALL CLAIMS, SUITS, LIABILITY, DEMANDS, JUDGMENTS, OR COSTS ARISING OUT OF OR RESULTING THERE FROM ANY USE OF THESE CONSTRUCTION DOCUMENTS FOR OR ON ACCOUNT OF ANY INJURY, DEATH, DAMAGE OR LOSS TO PERSONS OR PROPERTY, DIRECT OR CONSEQUENTIAL DAMAGES IN ANY AMOUNT. THIS INDEMNITY DOES NOT APPLY TO THE SOLE NEGLIGENCE OR WILLFUL MISCONDUCT OF DESIGN PATH STUDIO OR ITS ARCHITECTS.
3. THE DESIGNS REPRESENTED BY THESE PLANS ARE COPYRIGHTED AND ARE SUBJECT TO COPYRIGHT PROTECTION.
4. IF THE RECIPIENT DOES NOT AGREE WITH THE ABOVE CONDITIONS, DO NOT PROCEED WITH CONSTRUCTION OF AN ADU OR OTHER IMPROVEMENT UNDER THESE PLANS AT ALL.

project
City of Perris
Pre-Approved
ADU Program

revisions
0

description
Floor Plan
Spanish
Reverse

date 4 April 2025
project no. PERRIS PRADU
drawn by DESIGN PATH STUDIO
sheet no. A1.2R

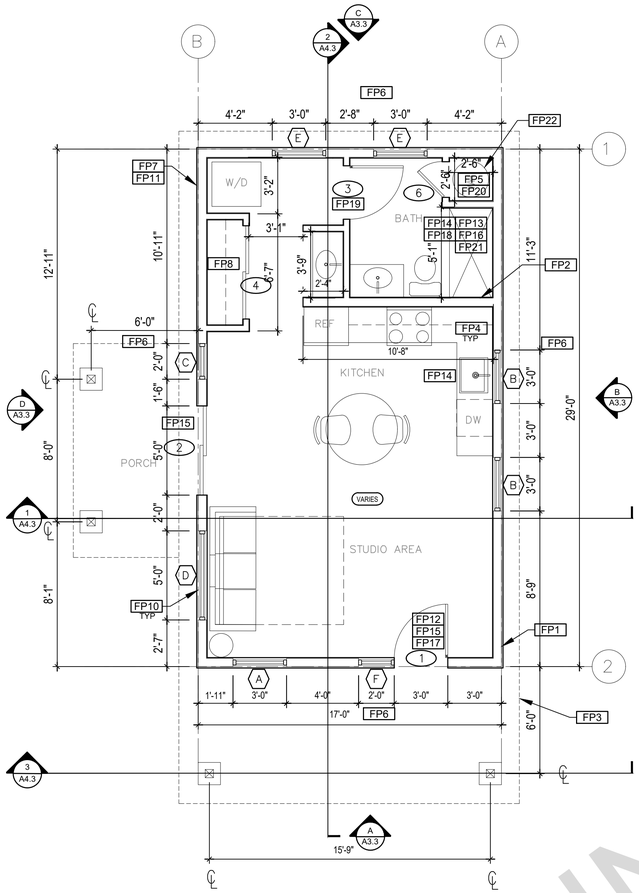

TRADITIONAL FLOOR PLAN

1/4"=1'-0" 499 SQ. FT. STUDIO

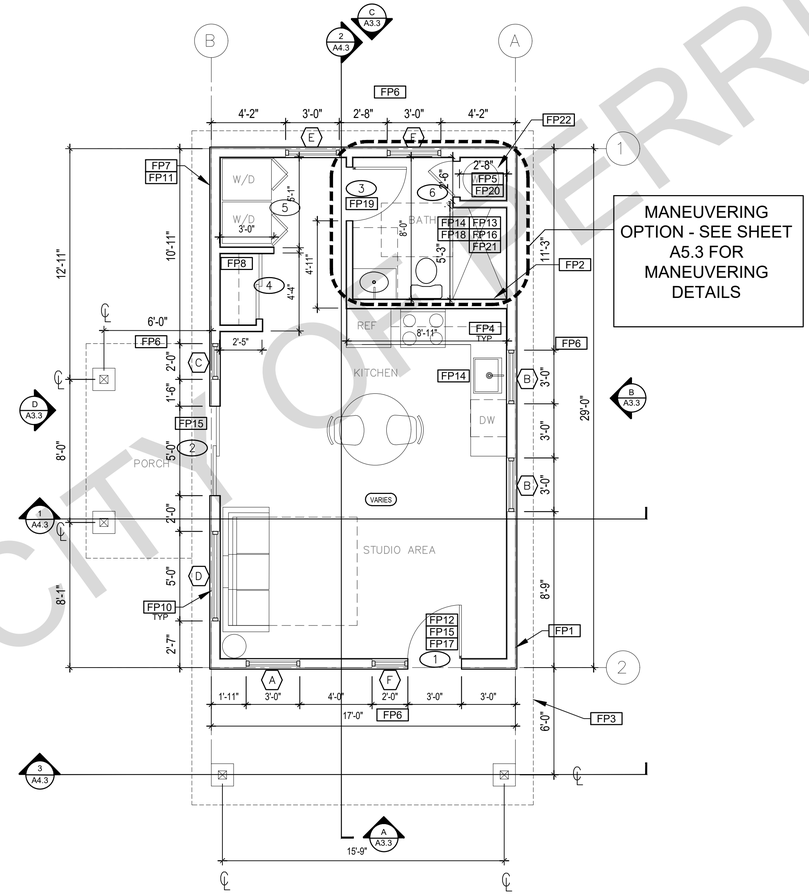

MANEUVERING OPTION

1/4"=1'-0" 499 SQ. FT. STUDIO

FOR USE IN IN THE CITY OF PERRIS

ROOF KEYNOTES

- RP1 LINE OF ROOF OVERHANG
- RP2 CLASS A ROOFING MATERIAL. SEE GENERAL ROOF NOTE 13 ON SHEET G0.2 ICC ESR_____
- RP3 SUPPORT POST BELOW
- RP4 LINE OF WALLS BELOW
- RP5 ROOF DOWNSPOUT LOCATION TO BE DETERMINED BY SITE SPECIFIC CONDITIONS. ROOF GUTTERS SHALL BE PROVIDED WITH THE MEANS TO PREVENT THE ACCUMULATION OF LEAVES AND DEBRIS IN THE GUTTER IN HIGH FIRE SEVERITY ZONES.
- RP6 DESIGNATED SOLAR PANEL AREA. PLEASE SEE SOLAR READY NOTES ON THIS SHEET
- RP7 RAFTER VENTS TO MEET REQUIRED VENTILATION AREA FOR ENCLOSED RAFTER SPACES. MAX ¼", MIN ⅛" OPENING SIZE ON VENT SCREEN WITH CORROSION-RESISTANT WIRE SCREEN MATERIAL. 1 SF OF VENTING PER 150 SF OF ENCLOSED RAFTER AREA IN NON-FIRE RATED CONSTRUCTION PLEASE SEE VENTING CALCULATIONS OF THIS SHEET

FLOOR PLAN KEYNOTES

- FP1 STUD WALL SIZED PER STRUCTURAL
- FP2 2X6 STUD WALL OR FURRING AS NEEDED FOR MECHANICAL / PLUMBING / VENTING
- FP3 LINE OF OVERHANG ABOVE
- FP4 36" HIGH COUNTER
- FP5 WATER HEATER
- FP6 SLOPE SURFACE AWAY FROM BUILDING
- FP7 DRYER VENT TERMINATION ON EXTERIOR WALL TO BE A MINIMUM OF 3 FT FROM ANY OPENING. DRYER VENT SHALL NOT TERMINATE WITHIN 3 FT FROM THE PROPERTY LINES
- FP8 CLOSET SHELF AND POLE
- FP9 EMERGENCY EGRESS WINDOW
- FP10 WINDOW MUST HAVE A FRAME AND SASH COMPRISED OF WELDED CORNERS, METAL REINFORCEMENT IN THE INTERLOCK AREA, AND CONSTRUCTED OF MULTIPANE TEMPERED GLAZING WHERE INDICATED TYPICAL ALL WINDOWS
- FP11 VENT DRYER THROUGH WALL. SEE MECHANICAL / PLUMBING PLANS FOR FURTHER INFORMATION
- FP12 MIN. 1 HINGED ENTRY DOOR FOR EGRESS COMPLIANCE REQUIRED - THE EGRESS DOOR SHALL BE SIDE-HNGED AND SHALL PROVIDE A CLEAR WIDTH OF NOT LESS THAN 32 INCHES WHERE MEASURED BETWEEN THE FACE OF THE DOOR AND THE STOP, WITH THE DOOR OPEN 90°. THE CLEAR HEIGHT OF THE DOOR OPENING SHALL BE NOT LESS THAN 78 INCHES IN HEIGHT MEASURED FROM THE TOP OF THE THRESHOLD TO THE BOTTOM OF THE STOP
- FP13 SHOWER ENCLOSURE MUST BE TEMPERED. GLAZING IN THE WALLS/DOORS FACING OR CONTAINING BATHTUBS, SHOWERS, HOT TUBS, SPAS, WHIRLPOOLS, SAUNAS, STEAM ROOMS AND INDOOR/OUTDOOR SWIMMING POOLS WHERE THE BOTTOM EXPOSED EDGE OF THE GLAZING IS LESS THAN 60" ABOVE THE STANDING SURFACE. EXCEPTION: GLAZING THAT IS MORE THAN 60", MEASURED HORIZONTALLY, FROM THE WATER'S EDGE OF A BATHTUB, HOT TUB, SPA, WHIRLPOOL OR SWIMMING POOL. SHOWER DOORS SHALL OPEN AS TO MAINTAIN NOT LESS THAN A 22-INCH UNOBSTRUCTED OPENING FOR EGRESS.
- FP14 PER SECTION 301.1.1 CALGREEN AND CIVIL CODE 1101.3(c), ALL PLUMBING FIXTURES SHALL BE COMPLIANT WATER -CONSERVING PLUMBING FIXTURES. SEE MECHANICAL / PLUMBING PLANS FOR FURTHER INFORMATION
- FP15 LANDING OR FLOOR REQUIRED AT EACH SIDE OF EXTERIOR DOOR. WIDTH TO BE NOT LESS THAN THE DOOR SERVED AND HAVE A MIN 36 INCH DEPTH MEASURED IN THE DIRECTION OF TRAVEL. EXTERIOR LANDINGS SHALL BE PERMITTED TO HAVE A SLOPE NOT TO EXCEED ¼" PER FOOT. (CRC 3111.3) LANDINGS OR FINISHED FLOORS AT EGRESS DOOR SHALL NOT BE MORE THAN 1.5" LOWER THAN THE TOP OF THE THRESHOLD FOR OUTWARD SWINGING DOORS OR 7.75" FOR DOORS THAT DO NOT SWING OUTWARD. (CRC 3111.3.1)
  DOORS OTHER THAN THE REQUIRED EGRESS DOOR SHALL BE PROVIDED WITH LANDINGS OR FLOORS NOT MORE THAN 7.75" BELOW THE TOP OF THE THRESHOLD (CRC 3111.3.2)
- FP16 WALL COVERING SHALL BE CEMENT PLASTER, TILE OR APPROVED EQUAL TO 72" ABOVE DRAIN AT SHOWERS OR TUB WITH SHOWERS. MATERIALS USED AS BACKERS FOR WALL TILE IN TUBE AND REINFORCED GYPSUM PANELS, NON-ASBESTOS FIBER CEMENT BACKER BOARD, OR NON-ASBESTOS FIBER CEMENT REINFORCED CEMENTITIOUS BACKER UNITS INSTALLED IN ACCORDANCE WITH MANUFACTURERS' RECOMMENDATIONS.
- FP17 DOOR BELL BUTTON TO BE NO MORE THEN 48" ABOVE EXTERIOR FLOOR OR LANDING
- FP18 WATER CLOSET AND SHOWER TO HAVE REINFORCEMENT IN WALLS 2X8 NOMINAL AT 32" TO 39.5" ABOVE FINISH FLOOR. SEE FLOOR PLAN GENERAL NOTE #28 ON SHEET G0.2 FOR FURTHER INFORMATION. WHERE THE WATER CLOSET IS NOT PLACED ADJACENT TO A SIDE WALL CAPABLE OF ACCOMMODATING A GRAB BAR, THE BATHROOM SHALL HAVE PROVISIONS FOR INSTALLATION OF FLOOR-MOUNTED, FOLDAWAY OR SIMILAR ALTERNATE GRAB BAR REINFORCEMENTS APPROVED BY THE ENFORCING AGENCY.
- FP19 DOOR TO HAVE A NET CLEAR OPENING OF 32"
- FP20 DESIGNATED 2'- 6" x 2'- 6" x 7" TALL MINIMUM AREA FOR INSTALLATION OF AN ELECTRIC HYBRID HEAT PUMP WATER HEATER PER CEC 2022 SECTION 150.0(N)
- FP21 FURRING AS NEEDED FOR STANDARD TUB AND SHOWER LENGTH
- FP22 WATER HEATER TO BE STRAPPED TO WALL PER CRC 507.2 REQUIREMENTS

SOLAR READY NOTES

SOLAR READY ROOF AREA:
MIN DIMENSION > 5FT. MIN. SF. > 80SF.
PER CALIFORNIA ENERGY CODE SECTION 110.10(b)

THE SOLAR ZONE SHALL COMPLY WITH ACCESS, PATHWAY, SMOKE VENTILATION, AND S[PACING REQUIREMENTS AS SPECIFIED IN TILE 24, PART 9 OR OTHER PARTS OF TITLE 24 OR IN ANY REQUIREMENTS ADOPTED NY LOCAL JURISDICTION

SINGLE FAMILY RESIDENCE. THE SOLAR ZONE SHALL BE LOCATED ON THE ROOF OR OVERHANG OF THE BUILDING AND HAVE A TOTAL AREA OF NO LESS THAN 250SQFT.

FOR PHOTOVOLTAIC ARRAYS OCCUPYING NOT MORE THAN 33 PERCENT OF THE PLAN VIEW TOTAL ROOF AREA, NOT LESS THAN AN 18-INCH (457 MM) CLEAR SETBACK IS REQUIRED ON BOTH SIDES OF A HORIZONTAL RIDGE. FOR PHOTOVOLTAIC ARRAYS OCCUPYING MORE THAN 33 PERCENT OF THE PLAN VIEW TOTAL ROOF AREA, NOT LESS THAN A 36-INCH (914 MM) CLEAR SETBACK IS REQUIRED ON BOTH SIDES OF A HORIZONTAL RIDGE.

CAPACITY OF THE PV SYSTEMS PER THE INITIAL CF1R-PRF:_____1.70 kWdc_____
TO BE UPDATED WITH SITE SPECIFIC NUMBERS.

VENTING CALCULATIONS

ROOF VENTING: 1SF. OF ROOF VENTING PER 150 SF. OF ENCLOSED AREA OR ENCLOSED RAFTER AREA.
ENCLOSED RAFTER AREA: 499 SF.
VENTILATION AREA REQUIRED: 499 SF./150SF.= 3.33 SF.
CONVERT TO SQ. IN: 3.33 SF. x 144 = 479 SQ. IN.
MINIMUM VENTILATION AREA REQUIRED: 479 SQ. IN.

LEGEND

- SECTION CUT
- ELEVATION CALLOUT
- DETAIL DRAWING REF.
- WALL BELOW OR ROOF ABOVE
- SOLAR ZONE. REFER TO SOLAR NOTES ON SHEET G0.2
- ROOFING
- X — KEYNOTE
- X — DOOR SYMBOL
- X — WINDOW SYMBOL
- X'-X" — CEILING HEIGHTS
- VARIES — VAULTED CEILING
- X:12 — ROOF SLOPE

DESIGN PATH STUDIO
architecture + engineering + planning
DESIGNPATHSTUDIO.COM

BY USING THESE PERMIT READY CONSTRUCTION DOCUMENTS, THE RECIPIENT ACKNOWLEDGES, ACCEPTS AND VOLUNTARILY AFFIRMS THE FOLLOWING CONDITIONS:
1. THE USE OF THIS INFORMATION IS RESTRICTED TO THE ORIGINAL PROJECT FOR WHICH IT WAS PREPARED FOR THE PERMIT READY ACCESSORY DWELLING UNIT (ADU) PROGRAM FOR THE CITY OF PERRIS ONLY. THIS IS A LIMITED SET OF STANDARDIZED ADU PLANS AND SPECIFICATIONS APPROVED BY THE CITY OF PERRIS BUILDING DEPARTMENT. BUILDING CODES DO CHANGE OVER TIME AND RECIPIENT SHALL ENSURE FULL COMPLIANCE UNDER ALL CODES THEN IN EFFECT AT THE TIME OF THE SUBJECT PERMIT. THIS DOES NOT ELIMINATE OR REDUCE THE RECIPIENT'S RESPONSIBILITY TO VERIFY ANY AND ALL INFORMATION RELEVANT TO THE RECIPIENT'S WORK AND RESPONSIBILITY ON THIS PROJECT. DESIGN PATH STUDIO SHALL NOT BE RESPONSIBLE FOR TRANSLATION ERRORS. DO NOT USE THESE CONSTRUCTION DOCUMENTS IF THE PERMIT HAS EXPIRED OR IS REVOKED AT ALL.
2. THE RECIPIENT RECOGNIZES AND ACKNOWLEDGES THAT THE USE OF THIS INFORMATION WILL BE AT THEIR SOLE RISK AND WITHOUT ANY LIABILITY OR LEGAL EXPOSURE TO DESIGN PATH STUDIO. NO WARRANTIES OF ANY NATURE, WHETHER EXPRESS OR IMPLIED, SHALL ATTACH TO THESE DOCUMENTS AND THE INFORMATION CONTAINED THEREON. ANY USE, REUSE, OR ALTERATION OF THESE DOCUMENTS BY THE RECIPIENT OR BY OTHERS WILL BE AT THE RECIPIENT'S RISK AND FULL LEGAL RESPONSIBILITY. FURTHERMORE, THE RECIPIENT WILL, TO THE FULLEST EXTENT PERMITTED BY LAW, DEFEND, INDEMNIFY AND HOLD DESIGN PATH STUDIO AND ITS ARCHITECTS HARMLESS FROM ANY AND ALL CLAIMS, SUITS, LIABILITY, DEMANDS, JUDGMENTS, OR COSTS ARISING OUT OF OR RESULTING THERE FROM ANY USE OF THESE CONSTRUCTION DOCUMENTS FOR OR ON ACCOUNT OF ANY INJURY, DEATH, DAMAGE OR LOSS TO PERSONS OR PROPERTY, DIRECT OR CONSEQUENTIAL DAMAGES IN ANY AMOUNT. THIS INDEMNITY DOES NOT APPLY TO THE SOLE NEGLIGENCE OR WILLFUL MISCONDUCT OF DESIGN PATH STUDIO OR ITS ARCHITECTS.
3. THE DESIGNS REPRESENTED BY THESE PLANS ARE COPYRIGHTED AND ARE SUBJECT TO COPYRIGHT PROTECTION.
4. IF THE RECIPIENT DOES NOT AGREE WITH THE ABOVE CONDITIONS, DO NOT PROCEED WITH CONSTRUCTION OF AN ADU OR OTHER IMPROVEMENT UNDER THESE PLANS AT ALL.

project
City of Perris
Pre-Approved
ADU Program

revisions
1

description
Floor Plans
Traditional

date	4 April 2025
project no.	PERRIS PRADU
drawn by	DESIGN PATH STUDIO
sheet no.	A1.3

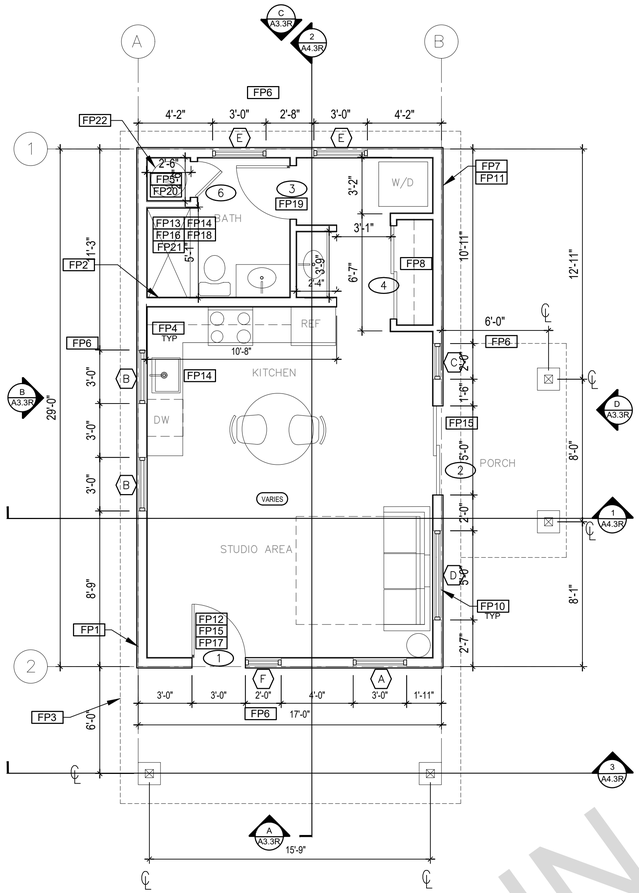

TRADITIONAL FLOOR PLAN

1/4"=1'-0" 499 SQ. FT. STUDIO - REVERSE

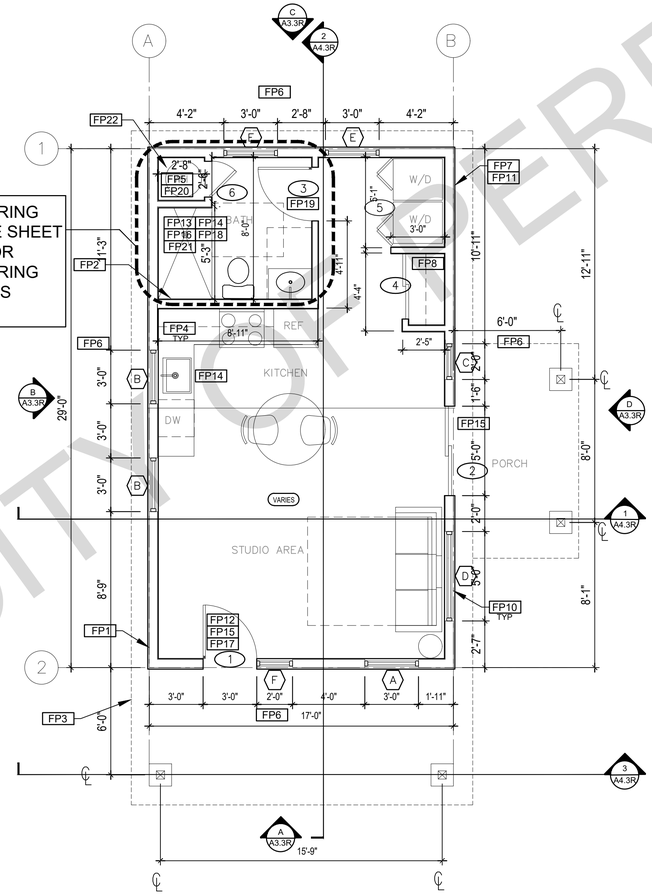

MANEUVERING OPTION

1/4"=1'-0" 499 SQ. FT. STUDIO - REVERSE

ROOF KEYNOTES

- RP1 LINE OF ROOF OVERHANG
- RP2 CLASS A ROOFING MATERIAL. SEE GENERAL ROOF NOTE 13 ON SHEET G0.2 ICC ESR_____
- RP3 SUPPORT POST BELOW
- RP4 LINE OF WALLS BELOW
- RP5 ROOF DOWNSPOUT LOCATION TO BE DETERMINED BY SITE SPECIFIC CONDITIONS. ROOF GUTTERS SHALL BE PROVIDED WITH THE MEANS TO PREVENT THE ACCUMULATION OF LEAVES AND DEBRIS IN THE GUTTER IN HIGH FIRE SEVERITY ZONES.
- RP6 DESIGNATED SOLAR PANEL AREA. PLEASE SEE SOLAR READY NOTES ON THIS SHEET
- RP7 RAFTER VENTS TO MEET REQUIRED VENTILATION AREA FOR ENCLOSED RAFTER SPACES. MAX ¼", MIN ⅛" OPENING SIZE ON VENT SCREEN WITH CORROSION-RESISTANT WIRE SCREEN MATERIAL. 1 SF OF VENTING PER 150 SF OF ENCLOSED RAFTER AREA IN NON-FIRE RATED CONSTRUCTION PLEASE SEE VENTING CALCULATIONS OF THIS SHEET

FLOOR PLAN KEYNOTES

- FP1 STUD WALL SIZED PER STRUCTURAL
- FP2 2X6 STUD WALL OR FURRING AS NEEDED FOR MECHANICAL / PLUMBING / VENTING
- FP3 LINE OF OVERHANG ABOVE
- FP4 36" HIGH COUNTER
- FP5 WATER HEATER
- FP6 SLOPE SURFACE AWAY FROM BUILDING
- FP7 DRYER VENT TERMINATION ON EXTERIOR WALL TO BE A MINIMUM OF 3 FT FROM ANY OPENING. DRYER VENT SHALL NOT TERMINATE WITHIN 3 FT FROM THE PROPERTY LINES
- FP8 CLOSET SHELF AND POLE
- FP9 EMERGENCY EGRESS WINDOW
- FP10 WINDOW MUST HAVE A FRAME AND SASH COMPRISED OF WELDED CORNERS, METAL REINFORCEMENT IN THE INTERLOCK AREA, AND CONSTRUCTED OF MULTIPANE TEMPERED GLAZING WHERE INDICATED TYPICAL ALL WINDOWS
- FP11 VENT DRYER THROUGH WALL. SEE MECHANICAL / PLUMBING PLANS FOR FURTHER INFORMATION
- FP12 MIN. 1 HINGED ENTRY DOOR FOR EGRESS COMPLIANCE REQUIRED - THE EGRESS DOOR SHALL BE SIDE-HNGED AND SHALL PROVIDE A CLEAR WIDTH OF NOT LESS THAN 32 INCHES WHERE MEASURED BETWEEN THE FACE OF THE DOOR AND THE STOP, WITH THE DOOR OPEN 90°. THE CLEAR HEIGHT OF THE DOOR OPENING SHALL BE NOT LESS THAN 78 INCHES IN HEIGHT MEASURED FROM THE TOP OF THE THRESHOLD TO THE BOTTOM OF THE STOP
- FP13 SHOWER ENCLOSURE MUST BE TEMPERED. GLAZING IN THE WALLS/DOORS FACING OR CONTAINING BATHTUBS, SHOWERS, HOT TUBS, SPAS, WHIRLPOOLS, SAUNAS, STEAM ROOMS AND INDOOR/OUTDOOR SWIMMING POOLS WHERE THE BOTTOM EXPOSED EDGE OF THE GLAZING IS LESS THAN 60" ABOVE THE STANDING SURFACE. EXCEPTION: GLAZING THAT IS MORE THAN 60", MEASURED HORIZONTALLY, FROM THE WATER'S EDGE OF A BATHTUB, HOT TUB, SPA, WHIRLPOOL OR SWIMMING POOL. SHOWER DOORS SHALL OPEN AS TO MAINTAIN NOT LESS THAN A 22-INCH UNOBSTRUCTED OPENING FOR EGRESS.
- FP14 PER SECTION 301.1.1 CALGREEN AND CIVIL CODE 1101.3(c), ALL PLUMBING FIXTURES SHALL BE COMPLIANT WATER -CONSERVING PLUMBING FIXTURES. SEE MECHANICAL / PLUMBING PLANS FOR FURTHER INFORMATION
- FP15 LANDING OR FLOOR REQUIRED AT EACH SIDE OF EXTERIOR DOOR. WIDTH TO BE NOT LESS THAN THE DOOR SERVED AND HAVE A MIN 36 INCH DEPTH MEASURED IN THE DIRECTION OF TRAVEL. EXTERIOR LANDINGS SHALL BE PERMITTED TO HAVE A SLOPE NOT TO EXCEED ¼" PER FOOT. (CRC 3111.3) LANDINGS OR FINISHED FLOORS AT EGRESS DOOR SHALL NOT BE MORE THAN 1.5" LOWER THAN THE TOP OF THE THRESHOLD FOR OUTWARD SWINGING DOORS OR 7.75" FOR DOORS THAT DO NOT SWING OUTWARD. (CRC 3111.3.1)
  DOORS OTHER THAN THE REQUIRED EGRESS DOOR SHALL BE PROVIDED WITH LANDINGS OR FLOORS NOT MORE THAN 7.75" BELOW THE TOP OF THE THRESHOLD (CRC 3111.3.2)
- FP16 WALL COVERING SHALL BE CEMENT PLASTER, TILE OR APPROVED EQUAL TO 72" ABOVE DRAIN AT SHOWERS OR TUB WITH SHOWERS. MATERIALS USED AS BACKERS FOR WALL TILE IN TUBE AND REINFORCED GYPSUM PANELS, NON-ASBESTOS FIBER CEMENT BACKER BOARD, OR NON-ASBESTOS FIBER CEMENT REINFORCED CEMENTITIOUS BACKER UNITS INSTALLED IN ACCORDANCE WITH MANUFACTURERS' RECOMMENDATIONS.
- FP17 DOOR BELL BUTTON TO BE NO MORE THEN 48" ABOVE EXTERIOR FLOOR OR LANDING
- FP18 WATER CLOSET AND SHOWER TO HAVE REINFORCEMENT IN WALLS 2X8 NOMINAL AT 32" TO 39.5" ABOVE FINISH FLOOR. SEE FLOOR PLAN GENERAL NOTE #28 ON SHEET G0.2 FOR FURTHER INFORMATION, WHERE THE WATER CLOSET IS NOT PLACED ADJACENT TO A SIDE WALL CAPABLE OF ACCOMMODATING A GRAB BAR, THE BATHROOM SHALL HAVE PROVISIONS FOR INSTALLATION OF FLOOR-MOUNTED, FOLDAWAY OR SIMILAR ALTERNATE GRAB BAR REINFORCEMENTS APPROVED BY THE ENFORCING AGENCY.
- FP19 DOOR TO HAVE A NET CLEAR OPENING OF 32"
- FP20 DESIGNATED 2'- 6" x 2'- 6" x 7" TALL MINIMUM AREA FOR INSTALLATION OF AN ELECTRIC HYBRID HEAT PUMP WATER HEATER PER CEC 2022 SECTION 150.0(N)
- FP21 FURRING AS NEEDED FOR STANDARD TUB AND SHOWER LENGTH
- FP22 WATER HEATER TO BE STRAPPED TO WALL PER CRC 507.2 REQUIREMENTS

SOLAR READY NOTES

SOLAR READY ROOF AREA:
MIN DIMENSION > 5FT. MIN. SF. > 80SF.
PER CALIFORNIA ENERGY CODE SECTION 110.10(b)

THE SOLAR ZONE SHALL COMPLY WITH ACCESS, PATHWAY, SMOKE VENTILATION, AND S[PACING REQUIREMENTS AS SPECIFIED IN TILE 24, PART 9 OR OTHER PARTS OF TITLE 24 OR IN ANY REQUIREMENTS ADOPTED NY LOCAL JURISDICTION

SINGLE FAMILY RESIDENCE. THE SOLAR ZONE SHALL BE LOCATED ON THE ROOF OR OVERHANG OF THE BUILDING AND HAVE A TOTAL AREA OF NO LESS THAN 250SQFT.

FOR PHOTOVOLTAIC ARRAYS OCCUPYING NOT MORE THAN 33 PERCENT OF THE PLAN VIEW TOTAL ROOF AREA, NOT LESS THAN AN 18-INCH (457 MM) CLEAR SETBACK IS REQUIRED ON BOTH SIDES OF A HORIZONTAL RIDGE. FOR PHOTOVOLTAIC ARRAYS OCCUPYING MORE THAN 33 PERCENT OF THE PLAN VIEW TOTAL ROOF AREA, NOT LESS THAN A 36-INCH (914 MM) CLEAR SETBACK IS REQUIRED ON BOTH SIDES OF A HORIZONTAL RIDGE.

CAPACITY OF THE PV SYSTEMS PER THE INITIAL CF1R-PRF:_____1.70 kWdc_____
TO BE UPDATED WITH SITE SPECIFIC NUMBERS.

VENTING CALCULATIONS

ROOF VENTING: 1SF. OF ROOF VENTING PER 150 SF. OF ENCLOSED AREA OR ENCLOSED RAFTER AREA.
ENCLOSED RAFTER AREA: 499 SF.
VENTILATION AREA REQUIRED: 499 SF./150SF.= 3.33 SF.
CONVERT TO SQ. IN: 3.33 SF. x 144 = 479 SQ. IN.
MINIMUM VENTILATION AREA REQUIRED: 479 SQ. IN.

LEGEND

- SECTION CUT
- ELEVATION CALLOUT
- DETAIL DRAWING REF.
- WALL BELOW OR ROOF ABOVE
- SOLAR ZONE. REFER TO SOLAR NOTES ON SHEET G0.2
- ROOFING
- X — KEYNOTE
- X — DOOR SYMBOL
- X — WINDOW SYMBOL
- X'-X" — CEILING HEIGHTS
- VARIES — VAULTED CEILING
- X:12 — ROOF SLOPE

FOR USE IN IN THE CITY OF PERRIS

DESIGN PATH STUDIO
architecture + engineering + planning
DESIGNPATHSTUDIO.COM

BY USING THESE PERMIT READY CONSTRUCTION DOCUMENTS, THE RECIPIENT ACKNOWLEDGES, ACCEPTS AND VOLUNTARILY AFFIRMS THE FOLLOWING CONDITIONS:
1. THE USE OF THIS INFORMATION IS RESTRICTED TO THE ORIGINAL PROJECT FOR WHICH IT WAS PREPARED FOR THE PERMIT READY ACCESSORY DWELLING UNIT (ADU) PROGRAM FOR THE CITY OF PERRIS ONLY. THIS IS A LIMITED SET OF STANDARDIZED ADU PLANS AND SPECIFICATIONS APPROVED BY THE CITY OF PERRIS BUILDING DEPARTMENT. BUILDING CODES DO CHANGE OVER TIME AND RECIPIENT SHALL ENSURE FULL COMPLIANCE UNDER ALL CODES THEN IN EFFECT AT THE TIME OF THE SUBJECT PERMIT. THIS DOES NOT ELIMINATE OR REDUCE THE RECIPIENT'S RESPONSIBILITY TO VERIFY ANY AND ALL INFORMATION RELEVANT TO THE RECIPIENT'S WORK AND RESPONSIBILITY ON THIS PROJECT. DESIGN PATH STUDIO SHALL NOT BE RESPONSIBLE FOR TRANSLATION ERRORS. DO NOT USE THESE CONSTRUCTION DOCUMENTS IF THE PERMIT HAS EXPIRED OR IS REVOKED AT ALL.
2. THE RECIPIENT RECOGNIZES AND ACKNOWLEDGES THAT THE USE OF THIS INFORMATION WILL BE AT THEIR SOLE RISK AND WITHOUT ANY LIABILITY OR LEGAL EXPOSURE TO DESIGN PATH STUDIO. NO WARRANTIES OF ANY NATURE, WHETHER EXPRESS OR IMPLIED, SHALL ATTACH TO THESE DOCUMENTS AND THE INFORMATION CONTAINED THEREON. ANY USE, REUSE, OR ALTERATION OF THESE DOCUMENTS BY THE RECIPIENT OR BY OTHERS WILL BE AT THE RECIPIENT'S RISK AND FULL LEGAL RESPONSIBILITY. FURTHERMORE, THE RECIPIENT WILL, TO THE FULLEST EXTENT PERMITTED BY LAW, DEFEND, INDEMNIFY AND HOLD DESIGN PATH STUDIO AND ITS ARCHITECTS HARMLESS FROM ANY AND ALL CLAIMS, SUITS, LIABILITY, DEMANDS, JUDGMENTS, OR COSTS ARISING OUT OF OR RESULTING THERE FROM ANY USE OF THESE CONSTRUCTION DOCUMENTS FOR OR ON ACCOUNT OF ANY INJURY, DEATH, DAMAGE OR LOSS TO PERSONS OR PROPERTY, DIRECT OR CONSEQUENTIAL DAMAGES IN ANY AMOUNT. THIS INDEMNITY DOES NOT APPLY TO THE SOLE NEGLIGENCE OR WILLFUL MISCONDUCT OF DESIGN PATH STUDIO OR ITS ARCHITECTS.
3. THE DESIGNS REPRESENTED BY THESE PLANS ARE COPYRIGHTED AND ARE SUBJECT TO COPYRIGHT PROTECTION.
4. IF THE RECIPIENT DOES NOT AGREE WITH THE ABOVE CONDITIONS, DO NOT PROCEED WITH CONSTRUCTION OF AN ADU OR OTHER IMPROVEMENT UNDER THESE PLANS AT ALL.

project
City of Perris
Pre-Approved
ADU Program

revisions
1

description
Floor Plans
Traditional
Reverse

date	4 April 2025
project no.	PERRIS PRADU
drawn by	DESIGN PATH STUDIO
sheet no.	A1.3R

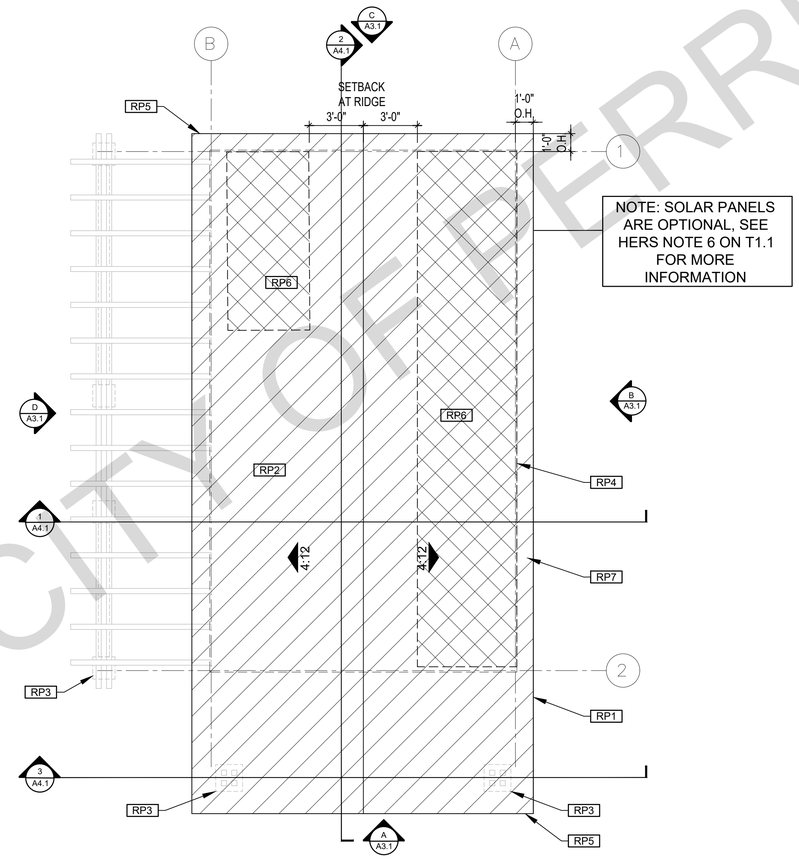

CRAFTSMAN ROOF PLAN

1/4"=1'-0" 499 SQ. FT. STUDIO

FOR USE IN IN THE CITY OF PERRIS

ROOF KEYNOTES

- RP1 LINE OF ROOF OVERHANG
- RP2 CLASS A ROOFING MATERIAL. SEE GENERAL ROOF NOTE 13 ON SHEET G0.2 ICC ESR_____
- RP3 SUPPORT POST BELOW
- RP4 LINE OF WALLS BELOW
- RP5 ROOF DOWNSPOUT LOCATION TO BE DETERMINED BY SITE SPECIFIC CONDITIONS. ROOF GUTTERS SHALL BE PROVIDED WITH THE MEANS TO PREVENT THE ACCUMULATION OF LEAVES AND DEBRIS IN THE GUTTER IN HIGH FIRE SEVERITY ZONES.
- RP6 DESIGNATED SOLAR PANEL AREA. PLEASE SEE SOLAR READY NOTES ON THIS SHEET
- RP7 RAFTER VENTS TO MEET REQUIRED VENTILATION AREA FOR ENCLOSED RAFTER SPACES. MAX ¼", MIN 1/16" OPENING SIZE ON VENT SCREEN WITH CORROSION-RESISTANT WIRE SCREEN MATERIAL. 1 SF OF VENTING PER 150 SF OF ENCLOSED RAFTER AREA IN NON-FIRE RATED CONSTRUCTION PLEASE SEE VENTING CALCULATIONS OF THIS SHEET

FLOOR PLAN KEYNOTES

- FP1 STUD WALL SIZED PER STRUCTURAL
- FP2 2X6 STUD WALL OR FURRING AS NEEDED FOR MECHANICAL / PLUMBING / VENTING
- FP3 LINE OF OVERHANG ABOVE
- FP4 36" HIGH COUNTER
- FP5 WATER HEATER
- FP6 SLOPE SURFACE AWAY FROM BUILDING
- FP7 DRYER VENT TERMINATION ON EXTERIOR WALL TO BE A MINIMUM OF 3 FT FROM ANY OPENING. DRYER VENT SHALL NOT TERMINATE WITHIN 3 FT FROM THE PROPERTY LINES
- FP8 CLOSET SHELF AND POLE
- FP9 EMERGENCY EGRESS WINDOW
- FP10 WINDOW MUST HAVE A FRAME AND SASH COMPRISED OF WELDED CORNERS, METAL REINFORCEMENT IN THE INTERLOCK AREA, AND CONSTRUCTED OF MULTIPANE TEMPERED GLAZING WHERE INDICATED TYPICAL ALL WINDOWS
- FP11 VENT DRYER THROUGH WALL. SEE MECHANICAL / PLUMBING PLANS FOR FURTHER INFORMATION
- FP12 MIN. 1 HINGED ENTRY DOOR FOR EGRESS COMPLIANCE REQUIRED - THE EGRESS DOOR SHALL BE SIDE-HNGED AND SHALL PROVIDE A CLEAR WIDTH OF NOT LESS THAN 32 INCHES WHERE MEASURED BETWEEN THE FACE OF THE DOOR AND THE STOP. WITH THE DOOR OPEN 90°. THE CLEAR HEIGHT OF THE DOOR OPENING SHALL BE NOT LESS THAN 78 INCHES IN HEIGHT MEASURED FROM THE TOP OF THE THRESHOLD TO THE BOTTOM OF THE STOP
- FP13 SHOWER ENCLOSURE MUST BE TEMPERED. GLAZING IN THE WALLS/DOORS FACING OR CONTAINING BATHTUBS, SHOWERS, HOT TUBS, SPAS, WHIRLPOOLS, SAUNAS, STEAM ROOMS AND INDOOR/OUTDOOR SWIMMING POOLS WHERE THE BOTTOM EXPOSED EDGE OF THE GLAZING IS LESS THAN 60" ABOVE THE STANDING SURFACE. EXCEPTION: GLAZING THAT IS MORE THAN 60", MEASURED HORIZONTALLY, FROM THE WATER'S EDGE OF A BATHTUB, HOT TUB, SPA, WHIRLPOOL OR SWIMMING POOL. SHOWER DOORS SHALL OPEN AS TO MAINTAIN NOT LESS THAN A 22-INCH UNOBSTRUCTED OPENING FOR EGRESS.
- FP14 PER SECTION 301.1.1 CALGREEN AND CIVIL CODE 1101.3(c), ALL PLUMBING FIXTURES SHALL BE COMPLIANT WATER -CONSERVING PLUMBING FIXTURES. SEE MECHANICAL / PLUMBING PLANS FOR FURTHER INFORMATION
- FP15 LANDING OR FLOOR REQUIRED AT EACH SIDE OF EXTERIOR DOOR. WIDTH TO BE NOT LESS THAN THE DOOR SERVED AND HAVE A MIN 36 INCH DEPTH MEASURED IN THE DIRECTION OF TRAVEL. EXTERIOR LANDINGS SHALL BE PERMITTED TO HAVE A SLOPE NOT TO EXCEED $\frac{1}{4}$" PER FOOT, (CRC 3111.3) LANDINGS OR FINISHED FLOORS AT EGRESS DOOR SHALL NOT BE MORE THAN 1.5" LOWER THAN THE TOP OF THE THRESHOLD FOR OUTWARD SWINGING DOORS OR 7.75" FOR DOORS THAT DO NOT SWING OUTWARD. (CRC 3111.3.1)
  DOORS OTHER THAN THE REQUIRED EGRESS DOOR SHALL BE PROVIDED WITH LANDINGS OR FLOORS NOT MORE THAN 7.75" BELOW THE TOP OF THE THRESHOLD (CRC 3111.3.2)
- FP16 WALL COVERING SHALL BE CEMENT PLASTER, TILE OR APPROVED EQUAL TO 72" ABOVE DRAIN AT SHOWERS OR TUB WITH SHOWERS. MATERIALS USED AS BACKERS FOR WALL TILE IN TUBE AND REINFORCED GYPSUM PANELS, NON-ASBESTOS FIBER CEMENT BACKER BOARD, OR NON-ASBESTOS FIBER CEMENT REINFORCED CEMENTITIOUS BACKER UNITS INSTALLED IN ACCORDANCE WITH MANUFACTURERS' RECOMMENDATIONS.
- FP17 DOOR BELL BUTTON TO BE NO MORE THEN 48" ABOVE EXTERIOR FLOOR OR LANDING
- FP18 WATER CLOSET AND SHOWER TO HAVE REINFORCEMENT IN WALLS 2X8 NOMINAL AT 32" TO 39.5" ABOVE FINISH FLOOR. SEE FLOOR PLAN GENERAL NOTE #28 ON SHEET G0.2 FOR FURTHER INFORMATION. WHERE THE WATER CLOSET IS NOT PLACED ADJACENT TO A SIDE WALL CAPABLE OF ACCOMMODATING A GRAB BAR, THE BATHROOM SHALL HAVE PROVISIONS FOR INSTALLATION OF FLOOR-MOUNTED, FOLDAWAY OR SIMILAR ALTERNATE GRAB BAR REINFORCEMENTS APPROVED BY THE ENFORCING AGENCY.
- FP19 DOOR TO HAVE A NET CLEAR OPENING OF 32"
- FP20 DESIGNATED 2'- 6" x 2'- 6" x 7' TALL MINIMUM AREA FOR INSTALLATION OF AN ELECTRIC HYBRID HEAT PUMP WATER HEATER PER CEC 2022 SECTION 150.0(N)
- FP21 FURRING AS NEEDED FOR STANDARD TUB AND SHOWER LENGTH
- FP22 WATER HEATER TO BE STRAPPED TO WALL PER CRC 507.2 REQUIREMENTS

SOLAR READY NOTES

SOLAR READY ROOF AREA:
MIN DIMENSION > 5FT. MIN. SF. > 80SF.
PER CALIFORNIA ENERGY CODE SECTION 110.10(b)

THE SOLAR ZONE SHALL COMPLY WITH ACCESS, PATHWAY, SMOKE VENTILATION, AND SIPACING REQUIREMENTS AS SPECIFIED IN TILE 24, PART 9 OR OTHER PARTS OF TITLE 24 OR IN ANY REQUIREMENTS ADOPTED NY LOCAL JURISDICTION

SINGLE FAMILY RESIDENCE. THE SOLAR ZONE SHALL BE LOCATED ON THE ROOF OR OVERHANG OF THE BUILDING AND HAVE A TOTAL AREA OF NO LESS THAN 250SQFT.

FOR PHOTOVOLTAIC ARRAYS OCCUPYING NOT MORE THAN 33 PERCENT OF THE PLAN VIEW TOTAL ROOF AREA, NOT LESS THAN AN 18-INCH (457 MM) CLEAR SETBACK IS REQUIRED ON BOTH SIDES OF A HORIZONTAL RIDGE. FOR PHOTOVOLTAIC ARRAYS OCCUPYING MORE THAN 33 PERCENT OF THE PLAN VIEW TOTAL ROOF AREA, NOT LESS THAN A 36-INCH (914 MM) CLEAR SETBACK IS REQUIRED ON BOTH SIDES OF A HORIZONTAL RIDGE.

CAPACITY OF THE PV SYSTEMS PER THE INITIAL CF1R-PRF: 1.70 kWdc
TO BE UPDATED WITH SITE SPECIFIC NUMBERS.

VENTING CALCULATIONS

ROOF VENTING: 1SF. OF ROOF VENTING PER 150 SF. OF ENCLOSED AREA OR ENCLOSED RAFTER AREA.
ENCLOSED RAFTER AREA: 499 SF.
VENTILATION AREA REQUIRED: 499 SF./150SF.= 3.33 SF.
CONVERT TO SQ. IN: 3.33 SF. x 144 = 479 SQ. IN.
MINIMUM VENTILATION AREA REQUIRED: 479 SQ. IN.

LEGEND

- SECTION CUT
- ELEVATION CALLOUT
- DETAIL DRAWING REF.
- WALL BELOW OR ROOF ABOVE
- SOLAR ZONE. REFER TO SOLAR NOTES ON SHEET G0.2
- ROOFING
- X — KEYNOTE
- X — DOOR SYMBOL
- X — WINDOW SYMBOL
- X'-X" — CEILING HEIGHTS
- VARIES — VAULTED CEILING
- X:12 — ROOF SLOPE

DESIGN PATH STUDIO
architecture + engineering + planning
DESIGNPATHSTUDIO.COM

BY USING THESE PERMIT READY CONSTRUCTION DOCUMENTS, THE RECIPIENT ACKNOWLEDGES, ACCEPTS AND VOLUNTARILY AFFIRMS THE FOLLOWING CONDITIONS:
1. THE USE OF THIS INFORMATION IS RESTRICTED TO THE ORIGINAL PROJECT FOR WHICH IT WAS PREPARED FOR THE PERMIT READY ACCESSORY DWELLING UNIT (ADU) PROGRAM FOR THE CITY OF PERRIS ONLY. THIS IS A LIMITED SET OF STANDARDIZED ADU PLANS AND SPECIFICATIONS APPROVED BY THE CITY OF PERRIS BUILDING DEPARTMENT. BUILDING CODES DO CHANGE OVER TIME AND RECIPIENT SHALL ENSURE FULL COMPLIANCE UNDER ALL CODES THEN IN EFFECT AT THE TIME OF THE SUBJECT PERMIT. THIS DOES NOT ELIMINATE OR REDUCE THE RECIPIENT'S RESPONSIBILITY TO VERIFY ANY AND ALL INFORMATION RELEVANT TO THE RECIPIENT'S WORK AND RESPONSIBILITY ON THIS PROJECT. DESIGN PATH STUDIO SHALL NOT BE RESPONSIBLE FOR TRANSLATION ERRORS. DO NOT USE THESE CONSTRUCTION DOCUMENTS IF THE PERMIT HAS EXPIRED OR IS REVOKED AT ALL.
2. THE RECIPIENT RECOGNIZES AND ACKNOWLEDGES THAT THE USE OF THIS INFORMATION WILL BE AT THEIR SOLE RISK AND WITHOUT ANY LIABILITY OR LEGAL EXPOSURE TO DESIGN PATH STUDIO. NO WARRANTIES OF ANY NATURE, WHETHER EXPRESS OR IMPLIED, SHALL ATTACH TO THESE DOCUMENTS AND THE INFORMATION CONTAINED THEREON. ANY USE, REUSE, OR ALTERATION OF THESE DOCUMENTS BY THE RECIPIENT OR BY OTHERS WILL BE AT THE RECIPIENT'S RISK AND FULL LEGAL RESPONSIBILITY. FURTHERMORE, THE RECIPIENT WILL, TO THE FULLEST EXTENT PERMITTED BY LAW, DEFEND, INDEMNIFY AND HOLD DESIGN PATH STUDIO AND ITS ARCHITECTS HARMLESS FROM ANY AND ALL CLAIMS, SUITS, LIABILITY, DEMANDS, JUDGMENTS, OR COSTS ARISING OUT OF OR RESULTING THERE FROM ANY USE OF THESE CONSTRUCTION DOCUMENTS FOR OR ON ACCOUNT OF ANY INJURY, DEATH, DAMAGE OR LOSS TO PERSONS OR PROPERTY, DIRECT OR CONSEQUENTIAL DAMAGES IN ANY AMOUNT. THIS INDEMNITY DOES NOT APPLY TO THE SOLE NEGLIGENCE OR WILLFUL MISCONDUCT OF DESIGN PATH STUDIO OR ITS ARCHITECTS.
3. THE DESIGNS REPRESENTED BY THESE PLANS ARE COPYRIGHTED AND ARE SUBJECT TO COPYRIGHT PROTECTION.
4. IF THE RECIPIENT DOES NOT AGREE WITH THE ABOVE CONDITIONS, DO NOT PROCEED WITH CONSTRUCTION OF AN ADU OR OTHER IMPROVEMENT UNDER THESE PLANS AT ALL.

project
City of Perris
Pre-Approved
ADU Program

revisions
1

description
Roof Plan
Craftsman

date	4 April 2025
project no.	PERRIS PRADU
drawn by	DESIGN PATH STUDIO
sheet no.	A1.4

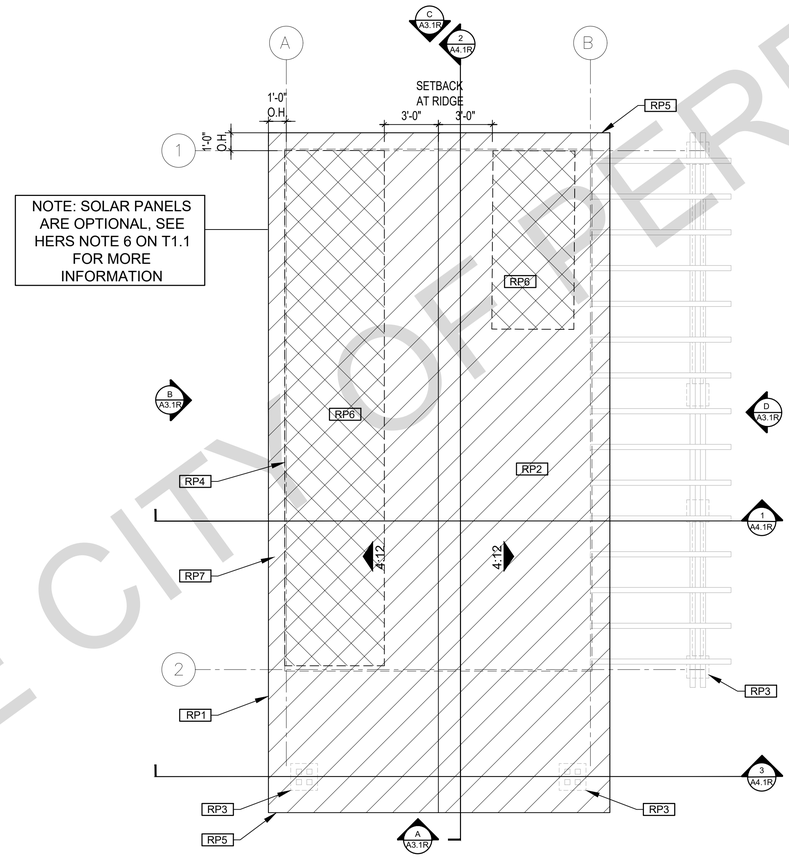

NOTE: SOLAR PANELS ARE OPTIONAL, SEE HERS NOTE 6 ON T1.1 FOR MORE INFORMATION

CRAFTSMAN ROOF PLAN

1/4"=1'-0" 499 SQ. FT. STUDIO - REVERSE

FOR USE IN IN THE CITY OF PERRIS

ROOF KEYNOTES

- RP1 LINE OF ROOF OVERHANG
- RP2 CLASS A ROOFING MATERIAL. SEE GENERAL ROOF NOTE 13 ON SHEET G0.2 ICC ESR_____
- RP3 SUPPORT POST BELOW
- RP4 LINE OF WALLS BELOW
- RP5 ROOF DOWNSPOUT LOCATION TO BE DETERMINED BY SITE SPECIFIC CONDITIONS. ROOF GUTTERS SHALL BE PROVIDED WITH THE MEANS TO PREVENT THE ACCUMULATION OF LEAVES AND DEBRIS IN THE GUTTER IN HIGH FIRE SEVERITY ZONES.
- RP6 DESIGNATED SOLAR PANEL AREA. PLEASE SEE SOLAR READY NOTES ON THIS SHEET
- RP7 RAFTER VENTS TO MEET REQUIRED VENTILATION AREA FOR ENCLOSED RAFTER SPACES. MAX ¼", MIN 1/16" OPENING SIZE ON VENT SCREEN WITH CORROSION-RESISTANT WIRE SCREEN MATERIAL. 1 SF OF VENTING PER 150 SF OF ENCLOSED RAFTER AREA IN NON-FIRE RATED CONSTRUCTION PLEASE SEE VENTING CALCULATIONS OF THIS SHEET

FLOOR PLAN KEYNOTES

- FP1 STUD WALL SIZED PER STRUCTURAL
- FP2 2X6 STUD WALL OR FURRING AS NEEDED FOR MECHANICAL / PLUMBING / VENTING
- FP3 LINE OF OVERHANG ABOVE
- FP4 36" HIGH COUNTER
- FP5 WATER HEATER
- FP6 SLOPE SURFACE AWAY FROM BUILDING
- FP7 DRYER VENT TERMINATION ON EXTERIOR WALL TO BE A MINIMUM OF 3 FT FROM ANY OPENING. DRYER VENT SHALL NOT TERMINATE WITHIN 3 FT FROM THE PROPERTY LINES
- FP8 CLOSET SHELF AND POLE
- FP9 EMERGENCY EGRESS WINDOW
- FP10 WINDOW MUST HAVE A FRAME AND SASH COMPRISED OF WELDED CORNERS, METAL REINFORCEMENT IN THE INTERLOCK AREA, AND CONSTRUCTED OF MULTIPANE TEMPERED GLAZING WHERE INDICATED TYPICAL ALL WINDOWS
- FP11 VENT DRYER THROUGH WALL. SEE MECHANICAL / PLUMBING PLANS FOR FURTHER INFORMATION
- FP12 MIN. 1 HINGED ENTRY DOOR FOR EGRESS COMPLIANCE REQUIRED - THE EGRESS DOOR SHALL BE SIDE-HNGED AND SHALL PROVIDE A CLEAR WIDTH OF NOT LESS THAN 32 INCHES WHERE MEASURED BETWEEN THE FACE OF THE DOOR AND THE STOP, WITH THE DOOR OPEN 90°. THE CLEAR HEIGHT OF THE DOOR OPENING SHALL BE NOT LESS THAN 78 INCHES IN HEIGHT MEASURED FROM THE TOP OF THE THRESHOLD TO THE BOTTOM OF THE STOP
- FP13 SHOWER ENCLOSURE MUST BE TEMPERED. GLAZING IN THE WALLS/DOORS FACING OR CONTAINING BATHTUBS, SHOWERS, HOT TUBS, SPAS, WHIRLPOOLS, SAUNAS, STEAM ROOMS AND INDOOR/OUTDOOR SWIMMING POOLS WHERE THE BOTTOM EXPOSED EDGE OF THE GLAZING IS LESS THAN 60" ABOVE THE STANDING SURFACE. EXCEPTION: GLAZING THAT IS MORE THAN 60", MEASURED HORIZONTALLY, FROM THE WATER'S EDGE OF A BATHTUB, HOT TUB, SPA, WHIRLPOOL OR SWIMMING POOL. SHOWER DOORS SHALL OPEN AS TO MAINTAIN NOT LESS THAN A 22-INCH UNOBSTRUCTED OPENING FOR EGRESS.
- FP14 PER SECTION 301.1.1 CALGREEN AND CIVIL CODE 1101.3(c), ALL PLUMBING FIXTURES SHALL BE COMPLIANT WATER -CONSERVING PLUMBING FIXTURES. SEE MECHANICAL / PLUMBING PLANS FOR FURTHER INFORMATION
- FP15 LANDING OR FLOOR REQUIRED AT EACH SIDE OF EXTERIOR DOOR. WIDTH TO BE NOT LESS THAN THE DOOR SERVED AND HAVE A MIN 36 INCH DEPTH MEASURED IN THE DIRECTION OF TRAVEL. EXTERIOR LANDINGS SHALL BE PERMITTED TO HAVE A SLOPE NOT TO EXCEED $\frac{1}{4}$" PER FOOT, (CRC 3111.3) LANDINGS OR FINISHED FLOORS AT EGRESS DOOR SHALL NOT BE MORE THAN 1.5" LOWER THAN THE TOP OF THE THRESHOLD FOR OUTWARD SWINGING DOORS OR 7.75" FOR DOORS THAT DO NOT SWING OUTWARD. (CRC 3111.3.1)
  DOORS OTHER THAN THE REQUIRED EGRESS DOOR SHALL BE PROVIDED WITH LANDINGS OR FLOORS NOT MORE THAN 7.75" BELOW THE TOP OF THE THRESHOLD (CRC 3111.3.2)
- FP16 WALL COVERING SHALL BE CEMENT PLASTER, TILE OR APPROVED EQUAL TO 72" ABOVE DRAIN AT SHOWERS OR TUB WITH SHOWERS. MATERIALS USED AS BACKERS FOR WALL TILE IN TUBE AND REINFORCED GYPSUM PANELS, NON-ASBESTOS FIBER CEMENT BACKER BOARD, OR NON-ASBESTOS FIBER CEMENT REINFORCED CEMENTITIOUS BACKER UNITS INSTALLED IN ACCORDANCE WITH MANUFACTURERS' RECOMMENDATIONS.
- FP17 DOOR BELL BUTTON TO BE NO MORE THEN 48" ABOVE EXTERIOR FLOOR OR LANDING
- FP18 WATER CLOSET AND SHOWER TO HAVE REINFORCEMENT IN WALLS 2X8 NOMINAL AT 32" TO 39.5" ABOVE FINISH FLOOR. SEE FLOOR PLAN GENERAL NOTE #28 ON SHEET G0.2 FOR FURTHER INFORMATION. WHERE THE WATER CLOSET IS NOT PLACED ADJACENT TO A SIDE WALL CAPABLE OF ACCOMMODATING A GRAB BAR, THE BATHROOM SHALL HAVE PROVISIONS FOR INSTALLATION OF FLOOR-MOUNTED, FOLDAWAY OR SIMILAR ALTERNATE GRAB BAR REINFORCEMENTS APPROVED BY THE ENFORCING AGENCY.
- FP19 DOOR TO HAVE A NET CLEAR OPENING OF 32"
- FP20 DESIGNATED 2'- 6" x 2'- 6" x 7' TALL MINIMUM AREA FOR INSTALLATION OF AN ELECTRIC HYBRID HEAT PUMP WATER HEATER PER CEC 2022 SECTION 150.0(N)
- FP21 FURRING AS NEEDED FOR STANDARD TUB AND SHOWER LENGTH
- FP22 WATER HEATER TO BE STRAPPED TO WALL PER CRC 507.2 REQUIREMENTS

SOLAR READY NOTES

SOLAR READY ROOF AREA:
MIN DIMENSION > 5FT. MIN. SF. > 80SF.
PER CALIFORNIA ENERGY CODE SECTION 110.10(b)

THE SOLAR ZONE SHALL COMPLY WITH ACCESS, PATHWAY, SMOKE VENTILATION, AND SIPACING REQUIREMENTS AS SPECIFIED IN TILE 24, PART 9 OR OTHER PARTS OF TITLE 24 OR IN ANY REQUIREMENTS ADOPTED NY LOCAL JURISDICTION

SINGLE FAMILY RESIDENCE. THE SOLAR ZONE SHALL BE LOCATED ON THE ROOF OR OVERHANG OF THE BUILDING AND HAVE A TOTAL AREA OF NO LESS THAN 250SQFT.

FOR PHOTOVOLTAIC ARRAYS OCCUPYING NOT MORE THAN 33 PERCENT OF THE PLAN VIEW TOTAL ROOF AREA, NOT LESS THAN AN 18-INCH (457 MM) CLEAR SETBACK IS REQUIRED ON BOTH SIDES OF A HORIZONTAL RIDGE. FOR PHOTOVOLTAIC ARRAYS OCCUPYING MORE THAN 33 PERCENT OF THE PLAN VIEW TOTAL ROOF AREA, NOT LESS THAN A 36-INCH (914 MM) CLEAR SETBACK IS REQUIRED ON BOTH SIDES OF A HORIZONTAL RIDGE.

CAPACITY OF THE PV SYSTEMS PER THE INITIAL CF1R-PRF: 1.70 kWdc
TO BE UPDATED WITH SITE SPECIFIC NUMBERS.

VENTING CALCULATIONS

ROOF VENTING: 1SF. OF ROOF VENTING PER 150 SF. OF ENCLOSED AREA OR ENCLOSED RAFTER AREA.
ENCLOSED RAFTER AREA: 499 SF.
VENTILATION AREA REQUIRED: 499 SF./150SF.= 3.33 SF.
CONVERT TO SQ. IN: 3.33 SF. x 144 = 479 SQ. IN.
MINIMUM VENTILATION AREA REQUIRED: 479 SQ. IN.

LEGEND

- SECTION CUT
- ELEVATION CALLOUT
- DETAIL DRAWING REF.
- WALL BELOW OR ROOF ABOVE
- SOLAR ZONE. REFER TO SOLAR NOTES ON SHEET G0.2
- ROOFING
- X — KEYNOTE
- X — DOOR SYMBOL
- X — WINDOW SYMBOL
- X'-X" — CEILING HEIGHTS
- VARIES — VAULTED CEILING
- X:12 — ROOF SLOPE

DESIGN PATH STUDIO
architecture + engineering + planning
DESIGNPATHSTUDIO.COM

BY USING THESE PERMIT READY CONSTRUCTION DOCUMENTS, THE RECIPIENT ACKNOWLEDGES, ACCEPTS AND VOLUNTARILY AFFIRMS THE FOLLOWING CONDITIONS:
1. THE USE OF THIS INFORMATION IS RESTRICTED TO THE ORIGINAL PROJECT FOR WHICH IT WAS PREPARED FOR THE PERMIT READY ACCESSORY DWELLING UNIT (ADU) PROGRAM FOR THE CITY OF PERRIS ONLY. THIS IS A LIMITED SET OF STANDARDIZED ADU PLANS AND SPECIFICATIONS APPROVED BY THE CITY OF PERRIS BUILDING DEPARTMENT. BUILDING CODES DO CHANGE OVER TIME AND RECIPIENT SHALL ENSURE FULL COMPLIANCE UNDER ALL CODES THEN IN EFFECT AT THE TIME OF THE SUBJECT PERMIT. THIS DOES NOT ELIMINATE OR REDUCE THE RECIPIENT'S RESPONSIBILITY TO VERIFY ANY AND ALL INFORMATION RELEVANT TO THE RECIPIENT'S WORK AND RESPONSIBILITY ON THIS PROJECT. DESIGN PATH STUDIO SHALL NOT BE RESPONSIBLE FOR TRANSLATION ERRORS. DO NOT USE THESE CONSTRUCTION DOCUMENTS IF THE PERMIT HAS EXPIRED OR IS REVOKED AT ALL.
2. THE RECIPIENT RECOGNIZES AND ACKNOWLEDGES THAT THE USE OF THIS INFORMATION WILL BE AT THEIR SOLE RISK AND WITHOUT ANY LIABILITY OR LEGAL EXPOSURE TO DESIGN PATH STUDIO. NO WARRANTIES OF ANY NATURE, WHETHER EXPRESS OR IMPLIED, SHALL ATTACH TO THESE DOCUMENTS AND THE INFORMATION CONTAINED THEREON. ANY USE, REUSE, OR ALTERATION OF THESE DOCUMENTS BY THE RECIPIENT OR BY OTHERS WILL BE AT THE RECIPIENT'S RISK AND FULL LEGAL RESPONSIBILITY. FURTHERMORE, THE RECIPIENT WILL, TO THE FULLEST EXTENT PERMITTED BY LAW, DEFEND, INDEMNIFY AND HOLD DESIGN PATH STUDIO AND ITS ARCHITECTS HARMLESS FROM ANY AND ALL CLAIMS, SUITS, LIABILITY, DEMANDS, JUDGMENTS, OR COSTS ARISING OUT OF OR RESULTING THERE FROM ANY USE OF THESE CONSTRUCTION DOCUMENTS FOR OR ON ACCOUNT OF ANY INJURY, DEATH, DAMAGE OR LOSS TO PERSONS OR PROPERTY, DIRECT OR CONSEQUENTIAL DAMAGES IN ANY AMOUNT. THIS INDEMNITY DOES NOT APPLY TO THE SOLE NEGLIGENCE OR WILLFUL MISCONDUCT OF DESIGN PATH STUDIO OR ITS ARCHITECTS.
3. THE DESIGNS REPRESENTED BY THESE PLANS ARE COPYRIGHTED AND ARE SUBJECT TO COPYRIGHT PROTECTION.
4. IF THE RECIPIENT DOES NOT AGREE WITH THE ABOVE CONDITIONS, DO NOT PROCEED WITH CONSTRUCTION OF AN ADU OR OTHER IMPROVEMENT UNDER THESE PLANS AT ALL.

project
City of Perris Pre-Approved ADU Program

revisions
1

description
Roof Plan Craftsman Reverse

date	4 April 2025
project no.	PERRIS PRADU
drawn by	DESIGN PATH STUDIO
sheet no.	A1.4R

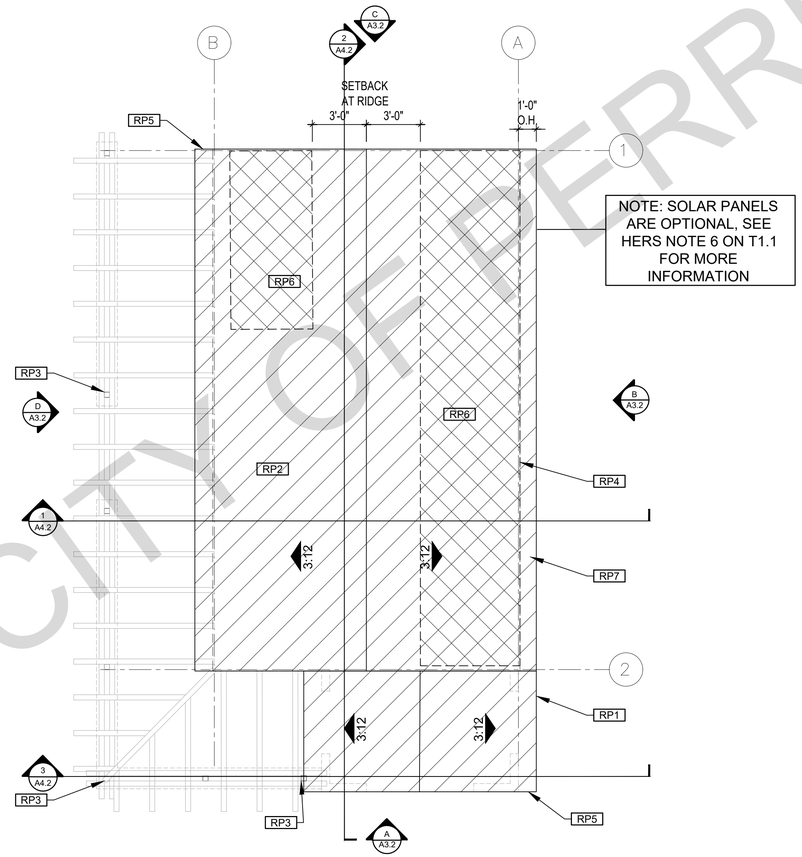

SPANISH ROOF PLAN

1/4"=1'-0" 499 SQ. FT. STUDIO

FOR USE IN IN THE CITY OF PERRIS

ROOF KEYNOTES

- RP1 LINE OF ROOF OVERHANG
- RP2 CLASS A ROOFING MATERIAL. SEE GENERAL ROOF NOTE 13 ON SHEET G0.2 ICC ESR_____
- RP3 SUPPORT POST BELOW
- RP4 LINE OF WALLS BELOW
- RP5 ROOF DOWNSPOUT LOCATION TO BE DETERMINED BY SITE SPECIFIC CONDITIONS. ROOF GUTTERS SHALL BE PROVIDED WITH THE MEANS TO PREVENT THE ACCUMULATION OF LEAVES AND DEBRIS IN THE GUTTER IN HIGH FIRE SEVERITY ZONES.
- RP6 DESIGNATED SOLAR PANEL AREA. PLEASE SEE SOLAR READY NOTES ON THIS SHEET
- RP7 RAFTER VENTS TO MEET REQUIRED VENTILATION AREA FOR ENCLOSED RAFTER SPACES. MAX ¼", MIN 1/16" OPENING SIZE ON VENT SCREEN WITH CORROSION-RESISTANT WIRE SCREEN MATERIAL. 1 SF OF VENTING PER 150 SF OF ENCLOSED RAFTER AREA IN NON-FIRE RATED CONSTRUCTION PLEASE SEE VENTING CALCULATIONS OF THIS SHEET

FLOOR PLAN KEYNOTES

- FP1 STUD WALL SIZED PER STRUCTURAL
- FP2 2X6 STUD WALL OR FURRING AS NEEDED FOR MECHANICAL / PLUMBING / VENTING
- FP3 LINE OF OVERHANG ABOVE
- FP4 36" HIGH COUNTER
- FP5 WATER HEATER
- FP6 SLOPE SURFACE AWAY FROM BUILDING
- FP7 DRYER VENT TERMINATION ON EXTERIOR WALL TO BE A MINIMUM OF 3 FT FROM ANY OPENING. DRYER VENT SHALL NOT TERMINATE WITHIN 3 FT FROM THE PROPERTY LINES
- FP8 CLOSET SHELF AND POLE
- FP9 EMERGENCY EGRESS WINDOW
- FP10 WINDOW MUST HAVE A FRAME AND SASH COMPRISED OF WELDED CORNERS, METAL REINFORCEMENT IN THE INTERLOCK AREA, AND CONSTRUCTED OF MULTIPANE TEMPERED GLAZING WHERE INDICATED TYPICAL ALL WINDOWS
- FP11 VENT DRYER THROUGH WALL. SEE MECHANICAL / PLUMBING PLANS FOR FURTHER INFORMATION
- FP12 MIN. 1 HINGED ENTRY DOOR FOR EGRESS COMPLIANCE REQUIRED - THE EGRESS DOOR SHALL BE SIDE-HNGED AND SHALL PROVIDE A CLEAR WIDTH OF NOT LESS THAN 32 INCHES WHERE MEASURED BETWEEN THE FACE OF THE DOOR AND THE STOP. WITH THE DOOR OPEN 90°. THE CLEAR HEIGHT OF THE DOOR OPENING SHALL BE NOT LESS THAN 78 INCHES IN HEIGHT MEASURED FROM THE TOP OF THE THRESHOLD TO THE BOTTOM OF THE STOP
- FP13 SHOWER ENCLOSURE MUST BE TEMPERED. GLAZING IN THE WALLS/DOORS FACING OR CONTAINING BATHTUBS, SHOWERS, HOT TUBS, SPAS, WHIRLPOOLS, SAUNAS, STEAM ROOMS AND INDOOR/OUTDOOR SWIMMING POOLS WHERE THE BOTTOM EXPOSED EDGE OF THE GLAZING IS LESS THAN 60" ABOVE THE STANDING SURFACE. EXCEPTION: GLAZING THAT IS MORE THAN 60", MEASURED HORIZONTALLY, FROM THE WATER'S EDGE OF A BATHTUB, HOT TUB, SPA, WHIRLPOOL OR SWIMMING POOL. SHOWER DOORS SHALL OPEN AS TO MAINTAIN NOT LESS THAN A 22-INCH UNOBSTRUCTED OPENING FOR EGRESS.
- FP14 PER SECTION 301.1.1 CALGREEN AND CIVIL CODE 1101.3(c), ALL PLUMBING FIXTURES SHALL BE COMPLIANT WATER -CONSERVING PLUMBING FIXTURES. SEE MECHANICAL / PLUMBING PLANS FOR FURTHER INFORMATION
- FP15 LANDING OR FLOOR REQUIRED AT EACH SIDE OF EXTERIOR DOOR. WIDTH TO BE NOT LESS THAN THE DOOR SERVED AND HAVE A MIN 36 INCH DEPTH MEASURED IN THE DIRECTION OF TRAVEL. EXTERIOR LANDINGS SHALL BE PERMITTED TO HAVE A SLOPE NOT TO EXCEED $\frac{1}{4}$" PER FOOT. (CRC 3111.3) LANDINGS OR FINISHED FLOORS AT EGRESS DOOR SHALL NOT BE MORE THAN 1.5" LOWER THAN THE TOP OF THE THRESHOLD FOR OUTWARD SWINGING DOORS OR 7.75" FOR DOORS THAT DO NOT SWING OUTWARD. (CRC 3111.3.1)
  DOORS OTHER THAN THE REQUIRED EGRESS DOOR SHALL BE PROVIDED WITH LANDINGS OR FLOORS NOT MORE THAN 7.75" BELOW THE TOP OF THE THRESHOLD (CRC 3111.3.2)
- FP16 WALL COVERING SHALL BE CEMENT PLASTER, TILE OR APPROVED EQUAL TO 72" ABOVE DRAIN AT SHOWERS OR TUB WITH SHOWERS. MATERIALS USED AS BACKERS FOR WALL TILE IN TUBE AND REINFORCED GYPSUM PANELS, NON-ASBESTOS FIBER CEMENT BACKER BOARD, OR NON-ASBESTOS FIBER CEMENT REINFORCED CEMENTITIOUS BACKER UNITS INSTALLED IN ACCORDANCE WITH MANUFACTURERS' RECOMMENDATIONS.
- FP17 DOOR BELL BUTTON TO BE NO MORE THEN 48" ABOVE EXTERIOR FLOOR OR LANDING
- FP18 WATER CLOSET AND SHOWER TO HAVE REINFORCEMENT IN WALLS 2X8 NOMINAL AT 32" TO 39.5" ABOVE FINISH FLOOR. SEE FLOOR PLAN GENERAL NOTE #28 ON SHEET G0.2 FOR FURTHER INFORMATION. WHERE THE WATER CLOSET IS NOT PLACED ADJACENT TO A SIDE WALL CAPABLE OF ACCOMMODATING A GRAB BAR, THE BATHROOM SHALL HAVE PROVISIONS FOR INSTALLATION OF FLOOR-MOUNTED, FOLDAWAY OR SIMILAR ALTERNATE GRAB BAR REINFORCEMENTS APPROVED BY THE ENFORCING AGENCY.
- FP19 DOOR TO HAVE A NET CLEAR OPENING OF 32"
- FP20 DESIGNATED 2'- 6" x 2'- 6" x 7' TALL MINIMUM AREA FOR INSTALLATION OF AN ELECTRIC HYBRID HEAT PUMP WATER HEATER PER CEC 2022 SECTION 150.0(N)
- FP21 FURRING AS NEEDED FOR STANDARD TUB AND SHOWER LENGTH
- FP22 WATER HEATER TO BE STRAPPED TO WALL PER CRC 507.2 REQUIREMENTS

SOLAR READY NOTES

SOLAR READY ROOF AREA:
MIN DIMENSION > 5FT. MIN. SF. > 80SF.
PER CALIFORNIA ENERGY CODE SECTION 110.10(b)

THE SOLAR ZONE SHALL COMPLY WITH ACCESS, PATHWAY, SMOKE VENTILATION, AND SIPACING REQUIREMENTS AS SPECIFIED IN TILE 24, PART 9 OR OTHER PARTS OF TITLE 24 OR IN ANY REQUIREMENTS ADOPTED NY LOCAL JURISDICTION

SINGLE FAMILY RESIDENCE. THE SOLAR ZONE SHALL BE LOCATED ON THE ROOF OR OVERHANG OF THE BUILDING AND HAVE A TOTAL AREA OF NO LESS THAN 250SQFT.

FOR PHOTOVOLTAIC ARRAYS OCCUPYING NOT MORE THAN 33 PERCENT OF THE PLAN VIEW TOTAL ROOF AREA, NOT LESS THAN AN 18-INCH (457 MM) CLEAR SETBACK IS REQUIRED ON BOTH SIDES OF A HORIZONTAL RIDGE. FOR PHOTOVOLTAIC ARRAYS OCCUPYING MORE THAN 33 PERCENT OF THE PLAN VIEW TOTAL ROOF AREA, NOT LESS THAN A 36-INCH (914 MM) CLEAR SETBACK IS REQUIRED ON BOTH SIDES OF A HORIZONTAL RIDGE.

CAPACITY OF THE PV SYSTEMS PER THE INITIAL CF1R-PRF:_____1.70 kWdc_____
TO BE UPDATED WITH SITE SPECIFIC NUMBERS.

VENTING CALCULATIONS

ROOF VENTING: 1SF. OF ROOF VENTING PER 150 SF. OF ENCLOSED AREA OR ENCLOSED RAFTER AREA.
ENCLOSED RAFTER AREA:_499__SF.
VENTILATION AREA REQUIRED:_499_SF./150SF.=__3.33_SF.
CONVERT TO SQ. IN: __3.33 SF. x 144 = ___479___SQ. IN.
MINIMUM VENTILATION AREA REQUIRED:__479___SQ. IN.

LEGEND

- SECTION CUT
- ELEVATION CALLOUT
- DETAIL DRAWING REF.
- WALL BELOW OR ROOF ABOVE
- SOLAR ZONE. REFER TO SOLAR NOTES ON SHEET G0.2
- ROOFING
- X — KEYNOTE
- X — DOOR SYMBOL
- X — WINDOW SYMBOL
- X'-X" — CEILING HEIGHTS
- VARIES — VAULTED CEILING
- X:12 — ROOF SLOPE

DESIGN PATH STUDIO
architecture + engineering + planning
DESIGNPATHSTUDIO.COM

BY USING THESE PERMIT READY CONSTRUCTION DOCUMENTS, THE RECIPIENT ACKNOWLEDGES, ACCEPTS AND VOLUNTARILY AFFIRMS THE FOLLOWING CONDITIONS:
1. THE USE OF THIS INFORMATION IS RESTRICTED TO THE ORIGINAL PROJECT FOR WHICH IT WAS PREPARED FOR THE PERMIT READY ACCESSORY DWELLING UNIT (ADU) PROGRAM FOR THE CITY OF PERRIS ONLY. THIS IS A LIMITED SET OF STANDARDIZED ADU PLANS AND SPECIFICATIONS APPROVED BY THE CITY OF PERRIS BUILDING DEPARTMENT. BUILDING CODES DO CHANGE OVER TIME AND RECIPIENT SHALL ENSURE FULL COMPLIANCE UNDER ALL CODES THEN IN EFFECT AT THE TIME OF THE SUBJECT PERMIT. THIS DOES NOT ELIMINATE OR REDUCE THE RECIPIENT'S RESPONSIBILITY TO VERIFY ANY AND ALL INFORMATION RELEVANT TO THE RECIPIENT'S WORK AND RESPONSIBILITY ON THIS PROJECT. DESIGN PATH STUDIO SHALL NOT BE RESPONSIBLE FOR TRANSLATION ERRORS. DO NOT USE THESE CONSTRUCTION DOCUMENTS IF THE PERMIT HAS EXPIRED OR IS REVOKED AT ALL.
2. THE RECIPIENT RECOGNIZES AND ACKNOWLEDGES THAT THE USE OF THIS INFORMATION WILL BE AT THEIR SOLE RISK AND WITHOUT ANY LIABILITY OR LEGAL EXPOSURE TO DESIGN PATH STUDIO. NO WARRANTIES OF ANY NATURE, WHETHER EXPRESS OR IMPLIED, SHALL ATTACH TO THESE DOCUMENTS AND THE INFORMATION CONTAINED THEREON. ANY USE, REUSE, OR ALTERATION OF THESE DOCUMENTS BY THE RECIPIENT OR BY OTHERS WILL BE AT THE RECIPIENT'S RISK AND FULL LEGAL RESPONSIBILITY. FURTHERMORE, THE RECIPIENT WILL, TO THE FULLEST EXTENT PERMITTED BY LAW, DEFEND, INDEMNIFY AND HOLD DESIGN PATH STUDIO AND ITS ARCHITECTS HARMLESS FROM ANY AND ALL CLAIMS, SUITS, LIABILITY, DEMANDS, JUDGMENTS, OR COSTS ARISING OUT OF OR RESULTING THERE FROM ANY USE OF THESE CONSTRUCTION DOCUMENTS FOR OR ON ACCOUNT OF ANY INJURY, DEATH, DAMAGE OR LOSS TO PERSONS OR PROPERTY, DIRECT OR CONSEQUENTIAL DAMAGES IN ANY AMOUNT. THIS INDEMNITY DOES NOT APPLY TO THE SOLE NEGLIGENCE OR WILLFUL MISCONDUCT OF DESIGN PATH STUDIO OR ITS ARCHITECTS.
3. THE DESIGNS REPRESENTED BY THESE PLANS ARE COPYRIGHTED AND ARE SUBJECT TO COPYRIGHT PROTECTION.
4. IF THE RECIPIENT DOES NOT AGREE WITH THE ABOVE CONDITIONS, DO NOT PROCEED WITH CONSTRUCTION OF AN ADU OR OTHER IMPROVEMENT UNDER THESE PLANS AT ALL.

project
City of Perris
Pre-Approved
ADU Program

revisions
1

description
Roof Plan
Spanish

date	4 April 2025
project no.	PERRIS PRADU
drawn by	DESIGN PATH STUDIO
sheet no.	A1.5

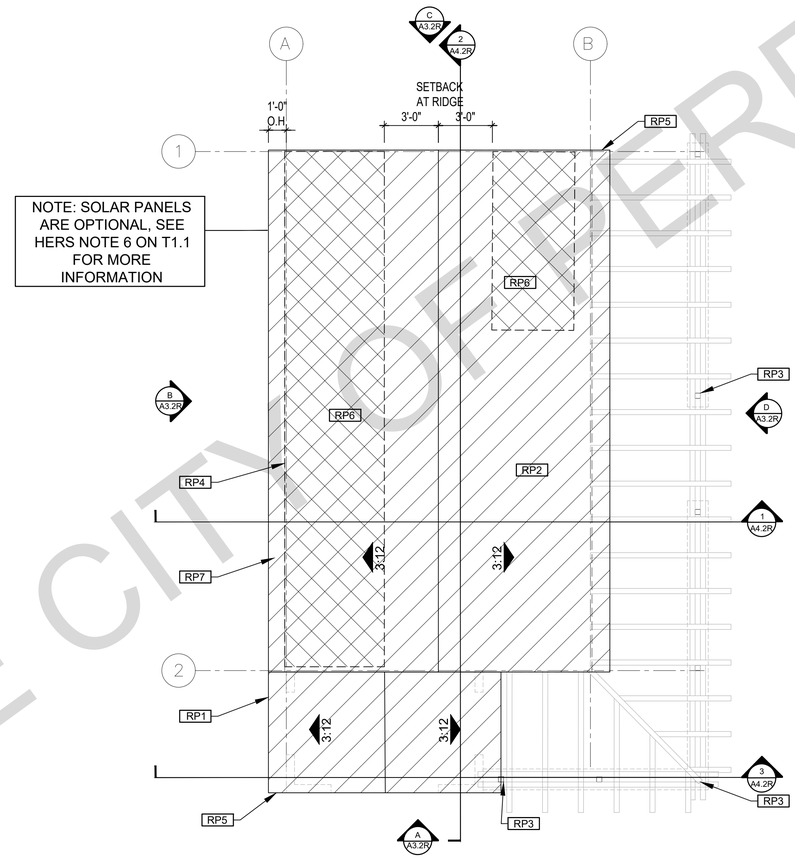

NOTE: SOLAR PANELS ARE OPTIONAL, SEE HERS NOTE 6 ON T1.1 FOR MORE INFORMATION

SPANISH ROOF PLAN

1/4"=1'-0" 499 SQ. FT. STUDIO - REVERSE

FOR USE IN IN THE CITY OF PERRIS

ROOF KEYNOTES

- RP1 LINE OF ROOF OVERHANG
- RP2 CLASS A ROOFING MATERIAL. SEE GENERAL ROOF NOTE 13 ON SHEET G0.2 ICC ESR_____
- RP3 SUPPORT POST BELOW
- RP4 LINE OF WALLS BELOW
- RP5 ROOF DOWNSPOUT LOCATION TO BE DETERMINED BY SITE SPECIFIC CONDITIONS. ROOF GUTTERS SHALL BE PROVIDED WITH THE MEANS TO PREVENT THE ACCUMULATION OF LEAVES AND DEBRIS IN THE GUTTER IN HIGH FIRE SEVERITY ZONES.
- RP6 DESIGNATED SOLAR PANEL AREA. PLEASE SEE SOLAR READY NOTES ON THIS SHEET
- RP7 RAFTER VENTS TO MEET REQUIRED VENTILATION AREA FOR ENCLOSED RAFTER SPACES. MAX ½", MIN 1/16" OPENING SIZE ON VENT SCREEN WITH CORROSION-RESISTANT WIRE SCREEN MATERIAL. 1 SF OF VENTING PER 150 SF OF ENCLOSED RAFTER AREA IN NON-FIRE RATED CONSTRUCTION PLEASE SEE VENTING CALCULATIONS OF THIS SHEET

FLOOR PLAN KEYNOTES

- FP1 STUD WALL SIZED PER STRUCTURAL
- FP2 2X6 STUD WALL OR FURRING AS NEEDED FOR MECHANICAL / PLUMBING / VENTING
- FP3 LINE OF OVERHANG ABOVE
- FP4 36" HIGH COUNTER
- FP5 WATER HEATER
- FP6 SLOPE SURFACE AWAY FROM BUILDING
- FP7 DRYER VENT TERMINATION ON EXTERIOR WALL TO BE A MINIMUM OF 3 FT FROM ANY OPENING. DRYER VENT SHALL NOT TERMINATE WITHIN 3 FT FROM THE PROPERTY LINES
- FP8 CLOSET SHELF AND POLE
- FP9 EMERGENCY EGRESS WINDOW
- FP10 WINDOW MUST HAVE A FRAME AND SASH COMPRISED OF WELDED CORNERS, METAL REINFORCEMENT IN THE INTERLOCK AREA, AND CONSTRUCTED OF MULTIPANE TEMPERED GLAZING WHERE INDICATED TYPICAL ALL WINDOWS
- FP11 VENT DRYER THROUGH WALL. SEE MECHANICAL / PLUMBING PLANS FOR FURTHER INFORMATION
- FP12 MIN. 1 HINGED ENTRY DOOR FOR EGRESS COMPLIANCE REQUIRED - THE EGRESS DOOR SHALL BE SIDE-HNGED AND SHALL PROVIDE A CLEAR WIDTH OF NOT LESS THAN 32 INCHES WHERE MEASURED BETWEEN THE FACE OF THE DOOR AND THE STOP, WITH THE DOOR OPEN 90°. THE CLEAR HEIGHT OF THE DOOR OPENING SHALL BE NOT LESS THAN 78 INCHES IN HEIGHT MEASURED FROM THE TOP OF THE THRESHOLD TO THE BOTTOM OF THE STOP
- FP13 SHOWER ENCLOSURE MUST BE TEMPERED. GLAZING IN THE WALLS/DOORS FACING OR CONTAINING BATHTUBS, SHOWERS, HOT TUBS, SPAS, WHIRLPOOLS, SAUNAS, STEAM ROOMS AND INDOOR/OUTDOOR SWIMMING POOLS WHERE THE BOTTOM EXPOSED EDGE OF THE GLAZING IS LESS THAN 60" ABOVE THE STANDING SURFACE. EXCEPTION: GLAZING THAT IS MORE THAN 60", MEASURED HORIZONTALLY, FROM THE WATER'S EDGE OF A BATHTUB, HOT TUB, SPA, WHIRLPOOL OR SWIMMING POOL. SHOWER DOORS SHALL OPEN AS TO MAINTAIN NOT LESS THAN A 22-INCH UNOBSTRUCTED OPENING FOR EGRESS.
- FP14 PER SECTION 301.1.1 CALGREEN AND CIVIL CODE 1101.3(c), ALL PLUMBING FIXTURES SHALL BE COMPLIANT WATER -CONSERVING PLUMBING FIXTURES. SEE MECHANICAL / PLUMBING PLANS FOR FURTHER INFORMATION
- FP15 LANDING OR FLOOR REQUIRED AT EACH SIDE OF EXTERIOR DOOR. WIDTH TO BE NOT LESS THAN THE DOOR SERVED AND HAVE A MIN 36 INCH DEPTH MEASURED IN THE DIRECTION OF TRAVEL. EXTERIOR LANDINGS SHALL BE PERMITTED TO HAVE A SLOPE NOT TO EXCEED $\frac{1}{4}$" PER FOOT, (CRC 3111.3) LANDINGS OR FINISHED FLOORS AT EGRESS DOOR SHALL NOT BE MORE THAN 1.5" LOWER THAN THE TOP OF THE THRESHOLD FOR OUTWARD SWINGING DOORS OR 7.75" FOR DOORS THAT DO NOT SWING OUTWARD. (CRC 3111.3.1)
  DOORS OTHER THAN THE REQUIRED EGRESS DOOR SHALL BE PROVIDED WITH LANDINGS OR FLOORS NOT MORE THAN 7.75" BELOW THE TOP OF THE THRESHOLD (CRC 3111.3.2)
- FP16 WALL COVERING SHALL BE CEMENT PLASTER, TILE OR APPROVED EQUAL TO 72" ABOVE DRAIN AT SHOWERS OR TUB WITH SHOWERS. MATERIALS USED AS BACKERS FOR WALL TILE IN TUBE AND REINFORCED GYPSUM PANELS, NON-ASBESTOS FIBER CEMENT BACKER BOARD, OR NON-ASBESTOS FIBER CEMENT REINFORCED CEMENTITIOUS BACKER UNITS INSTALLED IN ACCORDANCE WITH MANUFACTURERS' RECOMMENDATIONS.
- FP17 DOOR BELL BUTTON TO BE NO MORE THEN 48" ABOVE EXTERIOR FLOOR OR LANDING
- FP18 WATER CLOSET AND SHOWER TO HAVE REINFORCEMENT IN WALLS 2X8 NOMINAL AT 32" TO 39.5" ABOVE FINISH FLOOR. SEE FLOOR PLAN GENERAL NOTE #28 ON SHEET G0.2 FOR FURTHER INFORMATION. WHERE THE WATER CLOSET IS NOT PLACED ADJACENT TO A SIDE WALL CAPABLE OF ACCOMMODATING A GRAB BAR, THE BATHROOM SHALL HAVE PROVISIONS FOR INSTALLATION OF FLOOR-MOUNTED, FOLDAWAY OR SIMILAR ALTERNATE GRAB BAR REINFORCEMENTS APPROVED BY THE ENFORCING AGENCY.
- FP19 DOOR TO HAVE A NET CLEAR OPENING OF 32"
- FP20 DESIGNATED 2'- 6" x 2'- 6" x 7' TALL MINIMUM AREA FOR INSTALLATION OF AN ELECTRIC HYBRID HEAT PUMP WATER HEATER PER CEC 2022 SECTION 150.0(N)
- FP21 FURRING AS NEEDED FOR STANDARD TUB AND SHOWER LENGTH
- FP22 WATER HEATER TO BE STRAPPED TO WALL PER CRC 507.2 REQUIREMENTS

SOLAR READY NOTES

SOLAR READY ROOF AREA:
MIN DIMENSION > 5FT. MIN. SF. > 80SF.
PER CALIFORNIA ENERGY CODE SECTION 110.10(b)

THE SOLAR ZONE SHALL COMPLY WITH ACCESS, PATHWAY, SMOKE VENTILATION, AND SIPACING REQUIREMENTS AS SPECIFIED IN TILE 24, PART 9 OR OTHER PARTS OF TITLE 24 OR IN ANY REQUIREMENTS ADOPTED NY LOCAL JURISDICTION

SINGLE FAMILY RESIDENCE. THE SOLAR ZONE SHALL BE LOCATED ON THE ROOF OR OVERHANG OF THE BUILDING AND HAVE A TOTAL AREA OF NO LESS THAN 250SQFT.

FOR PHOTOVOLTAIC ARRAYS OCCUPYING NOT MORE THAN 33 PERCENT OF THE PLAN VIEW TOTAL ROOF AREA, NOT LESS THAN AN 18-INCH (457 MM) CLEAR SETBACK IS REQUIRED ON BOTH SIDES OF A HORIZONTAL RIDGE. FOR PHOTOVOLTAIC ARRAYS OCCUPYING MORE THAN 33 PERCENT OF THE PLAN VIEW TOTAL ROOF AREA, NOT LESS THAN A 36-INCH (914 MM) CLEAR SETBACK IS REQUIRED ON BOTH SIDES OF A HORIZONTAL RIDGE.

CAPACITY OF THE PV SYSTEMS PER THE INITIAL CF1R-PRF: 1.70 kWdc
TO BE UPDATED WITH SITE SPECIFIC NUMBERS.

VENTING CALCULATIONS

ROOF VENTING: 1SF. OF ROOF VENTING PER 150 SF. OF ENCLOSED AREA OR ENCLOSED RAFTER AREA.
ENCLOSED RAFTER AREA: 499 SF.
VENTILATION AREA REQUIRED: 499 SF./150SF.= 3.33 SF.
CONVERT TO SQ. IN: 3.33 SF. x 144 = 479 SQ. IN.
MINIMUM VENTILATION AREA REQUIRED: 479 SQ. IN.

LEGEND

- SECTION CUT
- ELEVATION CALLOUT
- DETAIL DRAWING REF.
- WALL BELOW OR ROOF ABOVE
- SOLAR ZONE. REFER TO SOLAR NOTES ON SHEET G0.2
- ROOFING
- X — KEYNOTE
- X — DOOR SYMBOL
- X — WINDOW SYMBOL
- X'-X" — CEILING HEIGHTS
- VARIES — VAULTED CEILING
- X:12 — ROOF SLOPE

DESIGN PATH STUDIO
architecture + engineering + planning
DESIGNPATHSTUDIO.COM

BY USING THESE PERMIT READY CONSTRUCTION DOCUMENTS, THE RECIPIENT ACKNOWLEDGES, ACCEPTS AND VOLUNTARILY AFFIRMS THE FOLLOWING CONDITIONS:
1. THE USE OF THIS INFORMATION IS RESTRICTED TO THE ORIGINAL PROJECT FOR WHICH IT WAS PREPARED FOR THE PERMIT READY ACCESSORY DWELLING UNIT (ADU) PROGRAM FOR THE CITY OF PERRIS ONLY. THIS IS A LIMITED SET OF STANDARDIZED ADU PLANS AND SPECIFICATIONS APPROVED BY THE CITY OF PERRIS BUILDING DEPARTMENT. BUILDING CODES DO CHANGE OVER TIME AND RECIPIENT SHALL ENSURE FULL COMPLIANCE UNDER ALL CODES THEN IN EFFECT AT THE TIME OF THE SUBJECT PERMIT. THIS DOES NOT ELIMINATE OR REDUCE THE RECIPIENT'S RESPONSIBILITY TO VERIFY ANY AND ALL INFORMATION RELEVANT TO THE RECIPIENT'S WORK AND RESPONSIBILITY ON THIS PROJECT. DESIGN PATH STUDIO SHALL NOT BE RESPONSIBLE FOR TRANSLATION ERRORS. DO NOT USE THESE CONSTRUCTION DOCUMENTS IF THE PERMIT HAS EXPIRED OR IS REVOKED AT ALL.
2. THE RECIPIENT RECOGNIZES AND ACKNOWLEDGES THAT THE USE OF THIS INFORMATION WILL BE AT THEIR SOLE RISK AND WITHOUT ANY LIABILITY OR LEGAL EXPOSURE TO DESIGN PATH STUDIO. NO WARRANTIES OF ANY NATURE, WHETHER EXPRESS OR IMPLIED, SHALL ATTACH TO THESE DOCUMENTS AND THE INFORMATION CONTAINED THEREON. ANY USE, REUSE, OR ALTERATION OF THESE DOCUMENTS BY THE RECIPIENT OR BY OTHERS WILL BE AT THE RECIPIENT'S RISK AND FULL LEGAL RESPONSIBILITY. FURTHERMORE, THE RECIPIENT WILL, TO THE FULLEST EXTENT PERMITTED BY LAW, DEFEND, INDEMNIFY AND HOLD DESIGN PATH STUDIO AND ITS ARCHITECTS HARMLESS FROM ANY AND ALL CLAIMS, SUITS, LIABILITY, DEMANDS, JUDGMENTS, OR COSTS ARISING OUT OF OR RESULTING THERE FROM ANY USE OF THESE CONSTRUCTION DOCUMENTS FOR OR ON ACCOUNT OF ANY INJURY, DEATH, DAMAGE OR LOSS TO PERSONS OR PROPERTY, DIRECT OR CONSEQUENTIAL DAMAGES IN ANY AMOUNT. THIS INDEMNITY DOES NOT APPLY TO THE SOLE NEGLIGENCE OR WILLFUL MISCONDUCT OF DESIGN PATH STUDIO OR ITS ARCHITECTS.
3. THE DESIGNS REPRESENTED BY THESE PLANS ARE COPYRIGHTED AND ARE SUBJECT TO COPYRIGHT PROTECTION.
4. IF THE RECIPIENT DOES NOT AGREE WITH THE ABOVE CONDITIONS, DO NOT PROCEED WITH CONSTRUCTION OF AN ADU OR OTHER IMPROVEMENT UNDER THESE PLANS AT ALL.

project
City of Perris
Pre-Approved
ADU Program

revisions
1

description
Roof Plan
Spanish
Reverse

date	4 April 2025
project no.	PERRIS PRADU
drawn by	DESIGN PATH STUDIO
sheet no.	A1.5R

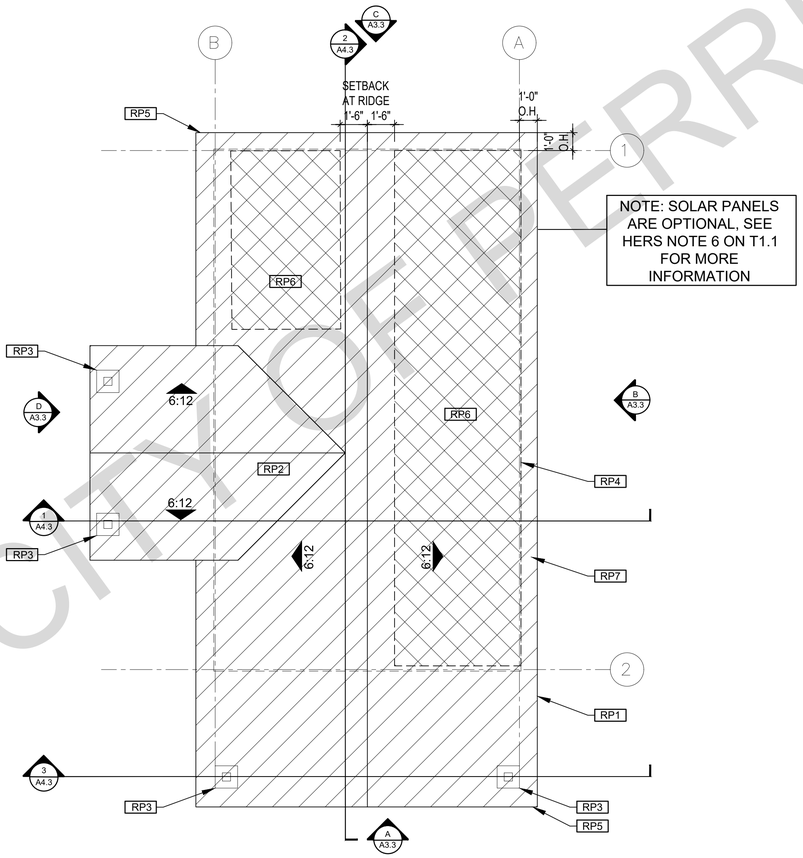

NOTE: SOLAR PANELS ARE OPTIONAL, SEE HERS NOTE 6 ON T1.1 FOR MORE INFORMATION

TRADITIONAL ROOF PLAN

1/4"=1'-0" 499 SQ. FT. STUDIO

ROOF KEYNOTES

- RP1 LINE OF ROOF OVERHANG
- RP2 CLASS A ROOFING MATERIAL. SEE GENERAL ROOF NOTE 13 ON SHEET G0.2 ICC ESR_____
- RP3 SUPPORT POST BELOW
- RP4 LINE OF WALLS BELOW
- RP5 ROOF DOWNSPOUT LOCATION TO BE DETERMINED BY SITE SPECIFIC CONDITIONS. ROOF GUTTERS SHALL BE PROVIDED WITH THE MEANS TO PREVENT THE ACCUMULATION OF LEAVES AND DEBRIS IN THE GUTTER IN HIGH FIRE SEVERITY ZONES.
- RP6 DESIGNATED SOLAR PANEL AREA. PLEASE SEE SOLAR READY NOTES ON THIS SHEET
- RP7 RAFTER VENTS TO MEET REQUIRED VENTILATION AREA FOR ENCLOSED RAFTER SPACES. MAX ½", MIN 1/16" OPENING SIZE ON VENT SCREEN WITH CORROSION-RESISTANT WIRE SCREEN MATERIAL. 1 SF OF VENTING PER 150 SF OF ENCLOSED RAFTER AREA IN NON-FIRE RATED CONSTRUCTION PLEASE SEE VENTING CALCULATIONS OF THIS SHEET

FLOOR PLAN KEYNOTES

- FP1 STUD WALL SIZED PER STRUCTURAL
- FP2 2X6 STUD WALL OR FURRING AS NEEDED FOR MECHANICAL / PLUMBING / VENTING
- FP3 LINE OF OVERHANG ABOVE
- FP4 36" HIGH COUNTER
- FP5 WATER HEATER
- FP6 SLOPE SURFACE AWAY FROM BUILDING
- FP7 DRYER VENT TERMINATION ON EXTERIOR WALL TO BE A MINIMUM OF 3 FT FROM ANY OPENING. DRYER VENT SHALL NOT TERMINATE WITHIN 3 FT FROM THE PROPERTY LINES
- FP8 CLOSET SHELF AND POLE
- FP9 EMERGENCY EGRESS WINDOW
- FP10 WINDOW MUST HAVE A FRAME AND SASH COMPRISED OF WELDED CORNERS, METAL REINFORCEMENT IN THE INTERLOCK AREA, AND CONSTRUCTED OF MULTIPANE TEMPERED GLAZING WHERE INDICATED TYPICAL ALL WINDOWS
- FP11 VENT DRYER THROUGH WALL. SEE MECHANICAL / PLUMBING PLANS FOR FURTHER INFORMATION
- FP12 MIN. 1 HINGED ENTRY DOOR FOR EGRESS COMPLIANCE REQUIRED - THE EGRESS DOOR SHALL BE SIDE-HNGED AND SHALL PROVIDE A CLEAR WIDTH OF NOT LESS THAN 32 INCHES WHERE MEASURED BETWEEN THE FACE OF THE DOOR AND THE STOP. WITH THE DOOR OPEN 90°. THE CLEAR HEIGHT OF THE DOOR OPENING SHALL BE NOT LESS THAN 78 INCHES IN HEIGHT MEASURED FROM THE TOP OF THE THRESHOLD TO THE BOTTOM OF THE STOP
- FP13 SHOWER ENCLOSURE MUST BE TEMPERED. GLAZING IN THE WALLS/DOORS FACING OR CONTAINING BATHTUBS, SHOWERS, HOT TUBS, SPAS, WHIRLPOOLS, SAUNAS, STEAM ROOMS AND INDOOR/OUTDOOR SWIMMING POOLS WHERE THE BOTTOM EXPOSED EDGE OF THE GLAZING IS LESS THAN 60" ABOVE THE STANDING SURFACE. EXCEPTION: GLAZING THAT IS MORE THAN 60", MEASURED HORIZONTALLY, FROM THE WATER'S EDGE OF A BATHTUB, HOT TUB, SPA, WHIRLPOOL OR SWIMMING POOL. SHOWER DOORS SHALL OPEN AS TO MAINTAIN NOT LESS THAN A 22-INCH UNOBSTRUCTED OPENING FOR EGRESS.
- FP14 PER SECTION 301.1.1 CALGREEN AND CIVIL CODE 1101.3(c), ALL PLUMBING FIXTURES SHALL BE COMPLIANT WATER -CONSERVING PLUMBING FIXTURES. SEE MECHANICAL / PLUMBING PLANS FOR FURTHER INFORMATION
- FP15 LANDING OR FLOOR REQUIRED AT EACH SIDE OF EXTERIOR DOOR. WIDTH TO BE NOT LESS THAN THE DOOR SERVED AND HAVE A MIN 36 INCH DEPTH MEASURED IN THE DIRECTION OF TRAVEL. EXTERIOR LANDINGS SHALL BE PERMITTED TO HAVE A SLOPE NOT TO EXCEED $\frac{1}{4}$" PER FOOT, (CRC 3111.3) LANDINGS OR FINISHED FLOORS AT EGRESS DOOR SHALL NOT BE MORE THAN 1.5" LOWER THAN THE TOP OF THE THRESHOLD FOR OUTWARD SWINGING DOORS OR 7.75" FOR DOORS THAT DO NOT SWING OUTWARD. (CRC 3111.3.1)
  DOORS OTHER THAN THE REQUIRED EGRESS DOOR SHALL BE PROVIDED WITH LANDINGS OR FLOORS NOT MORE THAN 7.75" BELOW THE TOP OF THE THRESHOLD (CRC 3111.3.2)
- FP16 WALL COVERING SHALL BE CEMENT PLASTER, TILE OR APPROVED EQUAL TO 72" ABOVE DRAIN AT SHOWERS OR TUB WITH SHOWERS. MATERIALS USED AS BACKERS FOR WALL TILE IN TUBE AND REINFORCED GYPSUM PANELS, NON-ASBESTOS FIBER CEMENT BACKER BOARD, OR NON-ASBESTOS FIBER CEMENT REINFORCED CEMENTITIOUS BACKER UNITS INSTALLED IN ACCORDANCE WITH MANUFACTURERS' RECOMMENDATIONS.
- FP17 DOOR BELL BUTTON TO BE NO MORE THEN 48" ABOVE EXTERIOR FLOOR OR LANDING
- FP18 WATER CLOSET AND SHOWER TO HAVE REINFORCEMENT IN WALLS 2X8 NOMINAL AT 32" TO 39.5" ABOVE FINISH FLOOR. SEE FLOOR PLAN GENERAL NOTE #28 ON SHEET G0.2 FOR FURTHER INFORMATION. WHERE THE WATER CLOSET IS NOT PLACED ADJACENT TO A SIDE WALL CAPABLE OF ACCOMMODATING A GRAB BAR, THE BATHROOM SHALL HAVE PROVISIONS FOR INSTALLATION OF FLOOR-MOUNTED, FOLDAWAY OR SIMILAR ALTERNATE GRAB BAR REINFORCEMENTS APPROVED BY THE ENFORCING AGENCY.
- FP19 DOOR TO HAVE A NET CLEAR OPENING OF 32"
- FP20 DESIGNATED 2'- 6" x 2'- 6" x 7' TALL MINIMUM AREA FOR INSTALLATION OF AN ELECTRIC HYBRID HEAT PUMP WATER HEATER PER CEC 2022 SECTION 150.0(N)
- FP21 FURRING AS NEEDED FOR STANDARD TUB AND SHOWER LENGTH
- FP22 WATER HEATER TO BE STRAPPED TO WALL PER CRC 507.2 REQUIREMENTS

SOLAR READY NOTES

SOLAR READY ROOF AREA:
MIN DIMENSION > 5FT. MIN. SF. > 80SF.
PER CALIFORNIA ENERGY CODE SECTION 110.10(b)

THE SOLAR ZONE SHALL COMPLY WITH ACCESS, PATHWAY, SMOKE VENTILATION, AND SIPACING REQUIREMENTS AS SPECIFIED IN TILE 24, PART 9 OR OTHER PARTS OF TITLE 24 OR IN ANY REQUIREMENTS ADOPTED NY LOCAL JURISDICTION

SINGLE FAMILY RESIDENCE. THE SOLAR ZONE SHALL BE LOCATED ON THE ROOF OR OVERHANG OF THE BUILDING AND HAVE A TOTAL AREA OF NO LESS THAN 250SQFT.

FOR PHOTOVOLTAIC ARRAYS OCCUPYING NOT MORE THAN 33 PERCENT OF THE PLAN VIEW TOTAL ROOF AREA, NOT LESS THAN AN 18-INCH (457 MM) CLEAR SETBACK IS REQUIRED ON BOTH SIDES OF A HORIZONTAL RIDGE. FOR PHOTOVOLTAIC ARRAYS OCCUPYING MORE THAN 33 PERCENT OF THE PLAN VIEW TOTAL ROOF AREA, NOT LESS THAN A 36-INCH (914 MM) CLEAR SETBACK IS REQUIRED ON BOTH SIDES OF A HORIZONTAL RIDGE.

CAPACITY OF THE PV SYSTEMS PER THE INITIAL CF1R-PRF:_____1.70 kWdc_____
TO BE UPDATED WITH SITE SPECIFIC NUMBERS.

VENTING CALCULATIONS

ROOF VENTING: 1SF. OF ROOF VENTING PER 150 SF. OF ENCLOSED AREA OR ENCLOSED RAFTER AREA.
ENCLOSED RAFTER AREA:_499__SF.
VENTILATION AREA REQUIRED:_499_SF./150SF.=__3.33_SF.
CONVERT TO SQ. IN: __3.33 SF. x 144 = __479__SQ. IN.
MINIMUM VENTILATION AREA REQUIRED:__479__SQ. IN.

LEGEND

- SECTION CUT
- ELEVATION CALLOUT
- DETAIL DRAWING REF.
- WALL BELOW OR ROOF ABOVE
- SOLAR ZONE. REFER TO SOLAR NOTES ON SHEET G0.2
- ROOFING
- X — KEYNOTE
- X — DOOR SYMBOL
- X — WINDOW SYMBOL
- X'-X" — CEILING HEIGHTS
- VARIES — VAULTED CEILING
- X:12 — ROOF SLOPE

FOR USE IN IN THE CITY OF PERRIS

DESIGN PATH STUDIO
architecture + engineering + planning
DESIGNPATHSTUDIO.COM

BY USING THESE PERMIT READY CONSTRUCTION DOCUMENTS, THE RECIPIENT ACKNOWLEDGES, ACCEPTS AND VOLUNTARILY AFFIRMS THE FOLLOWING CONDITIONS:
1. THE USE OF THIS INFORMATION IS RESTRICTED TO THE ORIGINAL PROJECT FOR WHICH IT WAS PREPARED FOR THE PERMIT READY ACCESSORY DWELLING UNIT (ADU) PROGRAM FOR THE CITY OF PERRIS ONLY. THIS IS A LIMITED SET OF STANDARDIZED ADU PLANS AND SPECIFICATIONS APPROVED BY THE CITY OF PERRIS BUILDING DEPARTMENT. BUILDING CODES DO CHANGE OVER TIME AND RECIPIENT SHALL ENSURE FULL COMPLIANCE UNDER ALL CODES THEN IN EFFECT AT THE TIME OF THE SUBJECT PERMIT. THIS DOES NOT ELIMINATE OR REDUCE THE RECIPIENT'S RESPONSIBILITY TO VERIFY ANY AND ALL INFORMATION RELEVANT TO THE RECIPIENT'S WORK AND RESPONSIBILITY ON THIS PROJECT. DESIGN PATH STUDIO SHALL NOT BE RESPONSIBLE FOR TRANSLATION ERRORS. DO NOT USE THESE CONSTRUCTION DOCUMENTS IF THE PERMIT HAS EXPIRED OR IS REVOKED AT ALL.
2. THE RECIPIENT RECOGNIZES AND ACKNOWLEDGES THAT THE USE OF THIS INFORMATION WILL BE AT THEIR SOLE RISK AND WITHOUT ANY LIABILITY OR LEGAL EXPOSURE TO DESIGN PATH STUDIO. NO WARRANTIES OF ANY NATURE, WHETHER EXPRESS OR IMPLIED, SHALL ATTACH TO THESE DOCUMENTS AND THE INFORMATION CONTAINED THEREON. ANY USE, REUSE, OR ALTERATION OF THESE DOCUMENTS BY THE RECIPIENT OR BY OTHERS WILL BE AT THE RECIPIENT'S RISK AND FULL LEGAL RESPONSIBILITY. FURTHERMORE, THE RECIPIENT WILL, TO THE FULLEST EXTENT PERMITTED BY LAW, DEFEND, INDEMNIFY AND HOLD DESIGN PATH STUDIO AND ITS ARCHITECTS HARMLESS FROM ANY AND ALL CLAIMS, SUITS, LIABILITY, DEMANDS, JUDGMENTS, OR COSTS ARISING OUT OF OR RESULTING THERE FROM ANY USE OF THESE CONSTRUCTION DOCUMENTS FOR OR ON ACCOUNT OF ANY INJURY, DEATH, DAMAGE OR LOSS TO PERSONS OR PROPERTY, DIRECT OR CONSEQUENTIAL DAMAGES IN ANY AMOUNT. THIS INDEMNITY DOES NOT APPLY TO THE SOLE NEGLIGENCE OR WILLFUL MISCONDUCT OF DESIGN PATH STUDIO OR ITS ARCHITECTS.
3. THE DESIGNS REPRESENTED BY THESE PLANS ARE COPYRIGHTED AND ARE SUBJECT TO COPYRIGHT PROTECTION.
4. IF THE RECIPIENT DOES NOT AGREE WITH THE ABOVE CONDITIONS, DO NOT PROCEED WITH CONSTRUCTION OF AN ADU OR OTHER IMPROVEMENT UNDER THESE PLANS AT ALL.

project
City of Perris
Pre-Approved
ADU Program

revisions
1

description
Roof Plan
Traditional

date	4 April 2025
project no.	PERRIS PRADU
drawn by	DESIGN PATH STUDIO
sheet no.	A1.6

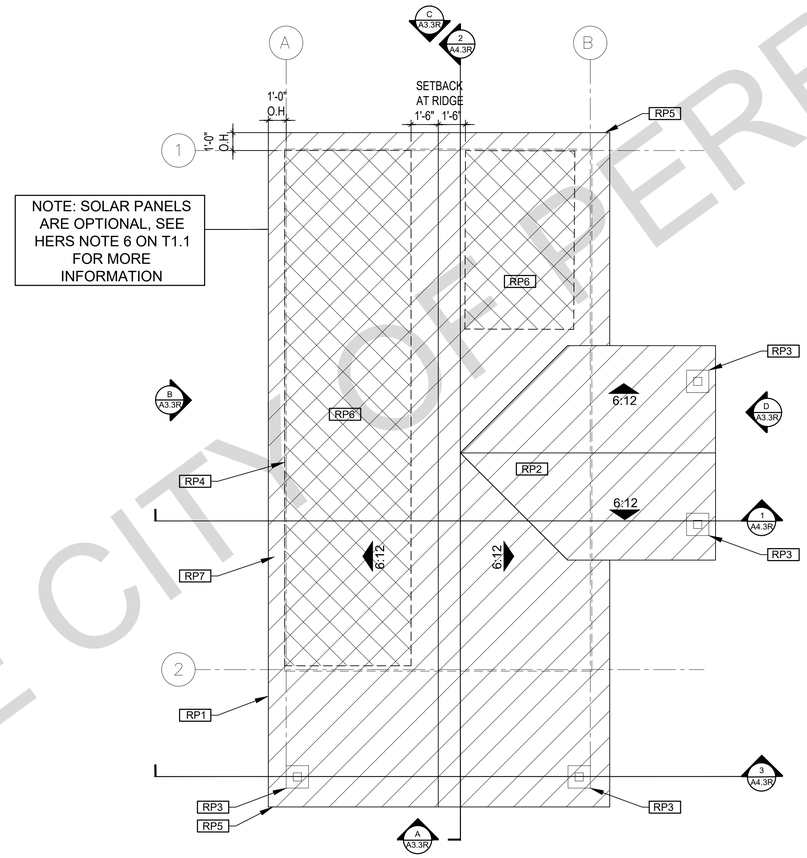

TRADITIONAL ROOF PLAN

1/4"=1'-0" 499 SQ. FT. STUDIO - REVERSE

FOR USE IN IN THE CITY OF PERRIS

ROOF KEYNOTES

- RP1 LINE OF ROOF OVERHANG
- RP2 CLASS A ROOFING MATERIAL. SEE GENERAL ROOF NOTE 13 ON SHEET G0.2 ICC ESR_____
- RP3 SUPPORT POST BELOW
- RP4 LINE OF WALLS BELOW
- RP5 ROOF DOWNSPOUT LOCATION TO BE DETERMINED BY SITE SPECIFIC CONDITIONS. ROOF GUTTERS SHALL BE PROVIDED WITH THE MEANS TO PREVENT THE ACCUMULATION OF LEAVES AND DEBRIS IN THE GUTTER IN HIGH FIRE SEVERITY ZONES.
- RP6 DESIGNATED SOLAR PANEL AREA. PLEASE SEE SOLAR READY NOTES ON THIS SHEET
- RP7 RAFTER VENTS TO MEET REQUIRED VENTILATION AREA FOR ENCLOSED RAFTER SPACES. MAX ¼", MIN ⅛" OPENING SIZE ON VENT SCREEN WITH CORROSION-RESISTANT WIRE SCREEN MATERIAL. 1 SF OF VENTING PER 150 SF OF ENCLOSED RAFTER AREA IN NON-FIRE RATED CONSTRUCTION PLEASE SEE VENTING CALCULATIONS OF THIS SHEET

FLOOR PLAN KEYNOTES

- FP1 STUD WALL SIZED PER STRUCTURAL
- FP2 2X6 STUD WALL OR FURRING AS NEEDED FOR MECHANICAL / PLUMBING / VENTING
- FP3 LINE OF OVERHANG ABOVE
- FP4 36" HIGH COUNTER
- FP5 WATER HEATER
- FP6 SLOPE SURFACE AWAY FROM BUILDING
- FP7 DRYER VENT TERMINATION ON EXTERIOR WALL TO BE A MINIMUM OF 3 FT FROM ANY OPENING. DRYER VENT SHALL NOT TERMINATE WITHIN 3 FT FROM THE PROPERTY LINES
- FP8 CLOSET SHELF AND POLE
- FP9 EMERGENCY EGRESS WINDOW
- FP10 WINDOW MUST HAVE A FRAME AND SASH COMPRISED OF WELDED CORNERS, METAL REINFORCEMENT IN THE INTERLOCK AREA, AND CONSTRUCTED OF MULTIPANE TEMPERED GLAZING WHERE INDICATED TYPICAL ALL WINDOWS
- FP11 VENT DRYER THROUGH WALL. SEE MECHANICAL / PLUMBING PLANS FOR FURTHER INFORMATION
- FP12 MIN. 1 HINGED ENTRY DOOR FOR EGRESS COMPLIANCE REQUIRED - THE EGRESS DOOR SHALL BE SIDE-HNGED AND SHALL PROVIDE A CLEAR WIDTH OF NOT LESS THAN 32 INCHES WHERE MEASURED BETWEEN THE FACE OF THE DOOR AND THE STOP, WITH THE DOOR OPEN 90°. THE CLEAR HEIGHT OF THE DOOR OPENING SHALL BE NOT LESS THAN 78 INCHES IN HEIGHT MEASURED FROM THE TOP OF THE THRESHOLD TO THE BOTTOM OF THE STOP
- FP13 SHOWER ENCLOSURE MUST BE TEMPERED. GLAZING IN THE WALLS/DOORS FACING OR CONTAINING BATHTUBS, SHOWERS, HOT TUBS, SPAS, WHIRLPOOLS, SAUNAS, STEAM ROOMS AND INDOOR/OUTDOOR SWIMMING POOLS WHERE THE BOTTOM EXPOSED EDGE OF THE GLAZING IS LESS THAN 60" ABOVE THE STANDING SURFACE. EXCEPTION: GLAZING THAT IS MORE THAN 60", MEASURED HORIZONTALLY, FROM THE WATER'S EDGE OF A BATHTUB, HOT TUB, SPA, WHIRLPOOL OR SWIMMING POOL. SHOWER DOORS SHALL OPEN AS TO MAINTAIN NOT LESS THAN A 22-INCH UNOBSTRUCTED OPENING FOR EGRESS.
- FP14 PER SECTION 301.1.1 CALGREEN AND CIVIL CODE 1101.3(c), ALL PLUMBING FIXTURES SHALL BE COMPLIANT WATER -CONSERVING PLUMBING FIXTURES. SEE MECHANICAL / PLUMBING PLANS FOR FURTHER INFORMATION
- FP15 LANDING OR FLOOR REQUIRED AT EACH SIDE OF EXTERIOR DOOR. WIDTH TO BE NOT LESS THAN THE DOOR SERVED AND HAVE A MIN 36 INCH DEPTH MEASURED IN THE DIRECTION OF TRAVEL. EXTERIOR LANDINGS SHALL BE PERMITTED TO HAVE A SLOPE NOT TO EXCEED ¼" PER FOOT. (CRC 3111.3) LANDINGS OR FINISHED FLOORS AT EGRESS DOOR SHALL NOT BE MORE THAN 1.5" LOWER THAN THE TOP OF THE THRESHOLD FOR OUTWARD SWINGING DOORS OR 7.75" FOR DOORS THAT DO NOT SWING OUTWARD. (CRC 3111.3.1)
  DOORS OTHER THAN THE REQUIRED EGRESS DOOR SHALL BE PROVIDED WITH LANDINGS OR FLOORS NOT MORE THAN 7.75" BELOW THE TOP OF THE THRESHOLD (CRC 3111.3.2)
- FP16 WALL COVERING SHALL BE CEMENT PLASTER, TILE OR APPROVED EQUAL TO 72" ABOVE DRAIN AT SHOWERS OR TUB WITH SHOWERS. MATERIALS USED AS BACKERS FOR WALL TILE IN TUBE AND REINFORCED GYPSUM PANELS, NON-ASBESTOS FIBER CEMENT BACKER BOARD, OR NON-ASBESTOS FIBER CEMENT REINFORCED CEMENTITIOUS BACKER UNITS INSTALLED IN ACCORDANCE WITH MANUFACTURERS' RECOMMENDATIONS.
- FP17 DOOR BELL BUTTON TO BE NO MORE THEN 48" ABOVE EXTERIOR FLOOR OR LANDING
- FP18 WATER CLOSET AND SHOWER TO HAVE REINFORCEMENT IN WALLS 2X8 NOMINAL AT 32" TO 39.5" ABOVE FINISH FLOOR. SEE FLOOR PLAN GENERAL NOTE #28 ON SHEET G0.2 FOR FURTHER INFORMATION, WHERE THE WATER CLOSET IS NOT PLACED ADJACENT TO A SIDE WALL CAPABLE OF ACCOMMODATING A GRAB BAR, THE BATHROOM SHALL HAVE PROVISIONS FOR INSTALLATION OF FLOOR-MOUNTED, FOLDAWAY OR SIMILAR ALTERNATE GRAB BAR REINFORCEMENTS APPROVED BY THE ENFORCING AGENCY.
- FP19 DOOR TO HAVE A NET CLEAR OPENING OF 32"
- FP20 DESIGNATED 2'- 6" x 2'- 6" x 7" TALL MINIMUM AREA FOR INSTALLATION OF AN ELECTRIC HYBRID HEAT PUMP WATER HEATER PER CEC 2022 SECTION 150.0(N)
- FP21 FURRING AS NEEDED FOR STANDARD TUB AND SHOWER LENGTH
- FP22 WATER HEATER TO BE STRAPPED TO WALL PER CRC 507.2 REQUIREMENTS

SOLAR READY NOTES

SOLAR READY ROOF AREA:
MIN DIMENSION > 5FT. MIN. SF. > 80SF.
PER CALIFORNIA ENERGY CODE SECTION 110.10(b)

THE SOLAR ZONE SHALL COMPLY WITH ACCESS, PATHWAY, SMOKE VENTILATION, AND S[PACING REQUIREMENTS AS SPECIFIED IN TILE 24, PART 9 OR OTHER PARTS OF TITLE 24 OR IN ANY REQUIREMENTS ADOPTED NY LOCAL JURISDICTION

SINGLE FAMILY RESIDENCE. THE SOLAR ZONE SHALL BE LOCATED ON THE ROOF OR OVERHANG OF THE BUILDING AND HAVE A TOTAL AREA OF NO LESS THAN 250SQFT.

FOR PHOTOVOLTAIC ARRAYS OCCUPYING NOT MORE THAN 33 PERCENT OF THE PLAN VIEW TOTAL ROOF AREA, NOT LESS THAN AN 18-INCH (457 MM) CLEAR SETBACK IS REQUIRED ON BOTH SIDES OF A HORIZONTAL RIDGE. FOR PHOTOVOLTAIC ARRAYS OCCUPYING MORE THAN 33 PERCENT OF THE PLAN VIEW TOTAL ROOF AREA, NOT LESS THAN A 36-INCH (914 MM) CLEAR SETBACK IS REQUIRED ON BOTH SIDES OF A HORIZONTAL RIDGE.

CAPACITY OF THE PV SYSTEMS PER THE INITIAL CF1R-PRF:_____1.70 kWdc_____
TO BE UPDATED WITH SITE SPECIFIC NUMBERS.

VENTING CALCULATIONS

ROOF VENTING: 1SF. OF ROOF VENTING PER 150 SF. OF ENCLOSED AREA OR ENCLOSED RAFTER AREA.
ENCLOSED RAFTER AREA: __499__SF.
VENTILATION AREA REQUIRED: __499__SF./150SF.= __3.33__SF.
CONVERT TO SQ. IN: __3.33 SF. x 144 = __479__SQ. IN.
MINIMUM VENTILATION AREA REQUIRED: __479__SQ. IN.

LEGEND

- SECTION CUT
- ELEVATION CALLOUT
- DETAIL DRAWING REF.
- WALL BELOW OR ROOF ABOVE
- SOLAR ZONE. REFER TO SOLAR NOTES ON SHEET G0.2
- ROOFING
- X — KEYNOTE
- X — DOOR SYMBOL
- X — WINDOW SYMBOL
- X'-X" — CEILING HEIGHTS
- VARIES — VAULTED CEILING
- X:12 — ROOF SLOPE

DESIGN PATH STUDIO
architecture + engineering + planning
DESIGNPATHSTUDIO.COM

BY USING THESE PERMIT READY CONSTRUCTION DOCUMENTS, THE RECIPIENT ACKNOWLEDGES, ACCEPTS AND VOLUNTARILY AFFIRMS THE FOLLOWING CONDITIONS:
1. THE USE OF THIS INFORMATION IS RESTRICTED TO THE ORIGINAL PROJECT FOR WHICH IT WAS PREPARED FOR THE PERMIT READY ACCESSORY DWELLING UNIT (ADU) PROGRAM FOR THE CITY OF PERRIS ONLY. THIS IS A LIMITED SET OF STANDARDIZED ADU PLANS AND SPECIFICATIONS APPROVED BY THE CITY OF PERRIS BUILDING DEPARTMENT. BUILDING CODES DO CHANGE OVER TIME AND RECIPIENT SHALL ENSURE FULL COMPLIANCE UNDER ALL CODES THEN IN EFFECT AT THE TIME OF THE SUBJECT PERMIT. THIS DOES NOT ELIMINATE OR REDUCE THE RECIPIENT'S RESPONSIBILITY TO VERIFY ANY AND ALL INFORMATION RELEVANT TO THE RECIPIENT'S WORK AND RESPONSIBILITY ON THIS PROJECT. DESIGN PATH STUDIO SHALL NOT BE RESPONSIBLE FOR TRANSLATION ERRORS. DO NOT USE THESE CONSTRUCTION DOCUMENTS IF THE PERMIT HAS EXPIRED OR IS REVOKED AT ALL.
2. THE RECIPIENT RECOGNIZES AND ACKNOWLEDGES THAT THE USE OF THIS INFORMATION WILL BE AT THEIR SOLE RISK AND WITHOUT ANY LIABILITY OR LEGAL EXPOSURE TO DESIGN PATH STUDIO. NO WARRANTIES OF ANY NATURE, WHETHER EXPRESS OR IMPLIED, SHALL ATTACH TO THESE DOCUMENTS AND THE INFORMATION CONTAINED THEREON. ANY USE, REUSE, OR ALTERATION OF THESE DOCUMENTS BY THE RECIPIENT OR BY OTHERS WILL BE AT THE RECIPIENT'S RISK AND FULL LEGAL RESPONSIBILITY. FURTHERMORE, THE RECIPIENT WILL, TO THE FULLEST EXTENT PERMITTED BY LAW, DEFEND, INDEMNIFY AND HOLD DESIGN PATH STUDIO AND ITS ARCHITECTS HARMLESS FROM ANY AND ALL CLAIMS, SUITS, LIABILITY, DEMANDS, JUDGMENTS, OR COSTS ARISING OUT OF OR RESULTING THERE FROM ANY USE OF THESE CONSTRUCTION DOCUMENTS FOR OR ON ACCOUNT OF ANY INJURY, DEATH, DAMAGE OR LOSS TO PERSONS OR PROPERTY, DIRECT OR CONSEQUENTIAL DAMAGES IN ANY AMOUNT. THIS INDEMNITY DOES NOT APPLY TO THE SOLE NEGLIGENCE OR WILLFUL MISCONDUCT OF DESIGN PATH STUDIO OR ITS ARCHITECTS.
3. THE DESIGNS REPRESENTED BY THESE PLANS ARE COPYRIGHTED AND ARE SUBJECT TO COPYRIGHT PROTECTION.
4. IF THE RECIPIENT DOES NOT AGREE WITH THE ABOVE CONDITIONS, DO NOT PROCEED WITH CONSTRUCTION OF AN ADU OR OTHER IMPROVEMENT UNDER THESE PLANS AT ALL.

project
City of Perris
Pre-Approved
ADU Program

revisions
1

description
Roof Plan
Traditional
Reverse

date	4 April 2025
project no.	PERRIS PRADU
drawn by	DESIGN PATH STUDIO
sheet no.	A1.6R

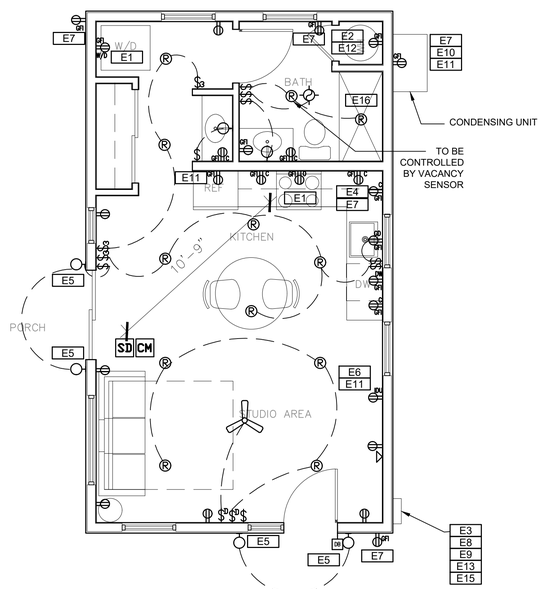

ELECTRICAL PLAN

1/4"=1'-0"

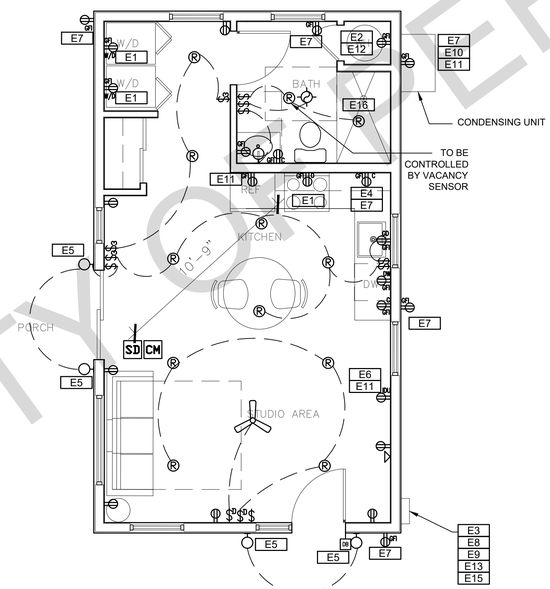

MANEUVERING OPTION

1/4"=1'-0"

MECHANICAL / PLUMBING KEYNOTES

MP1 INDOOR UNIT MINI SPLIT SYSTEM.

MP2 WATER CONSERVING FIXTURES: NEW WATER CLOSETS SHALL USE NO MORE THAN 1.28 GAL. OF WATER PER FLUSH, LAVATORIES LIMITED TO 1.2 GPM, KITCHEN FAUCETS NOT TO EXCEED 1.8 GPM AT 60 PSI THEY CAN INCREASE THE FLOW MOMENTARILY BUT CANT EXCEED 2.2GALLONS PER MIN. AT 60 PSI AND MUST DEFAULT TO A MAX. FLOW RATE OF 1.8GALLONS PER MIN AT 60 PSI., AND SHOWERS NOT EXCEED 1.8 GPM. AT 80 PSI AND ALL SHALL BE CERTIFIED TO MEET THE PERFORMANCE CRITERIA OF THE EPA WATERSENCE SPECIFICATIONS FOR SHOWERHEADS. CPC SECTIONS 407, 408, 411, 412 AND SECTION 301.1.1 CALGREEN CODE AND CIVIL CODE 1101.3(c)

MP3 EXHAUST HOOD ABOVE/ TO BE SMOOTH METALLIC INTERIOR SURFACE (CMC 504.3)

MP4 NEW WATER HEATER PER T24 REQUIREMENTS - TO HAVE CONDENSATE DRAIN INSTALLED NO HIGHER THAN 2" ABOVE THE BASE OF THE HEATER THAT ALSO ALLOWS GRAVITY DRAINAGE PLEASE SEE TABLE 501.1(2) ON THIS SHEET FOR FIRST HOUR RATING IN GALLONS

MP5 CONTROL VALVES IN SHOWERS, BATHTUBS, & BIDETS MUST BE PRESSURE BALANCED OR THERMOSTATIC MIX VALVES

MP6 MINIMUM OF 3 FT CLEARANCE TO ANY OPENING INTO BUILDING FOR EXHAUST FAN TERMINATIONS

MP7 CLEARANCE FOR WATER CLOSET TO BE A MIN. OF 24" IN FRONT, AND 18" FROM ITS CENTER TO ANY SIDE WALL OR OBSTRUCTION. (CPC 402.5)

MP8 THE 1/2" SIZE HOT WATER PIPE TO THE KITCHEN SINK AND THE COLD WATER PIPE WITHIN 5' OF WATER HEATER BOTH REQUIRE 1" INSULATION

MP9 DRYER EXHAUST OUTLET FROM DRYER TO EXTERIOR MAX LENGTH 14' WITH MAXIMUM OF TWO 90° ELBOWS.EXHAUST VENT MUST TERMINATE A MIN. OF 3' FROM ANY OPENING. MIN. TYPE 1 CLOTHES DRYER EXHAUST DUCTS SHALL BE OF RIGID METAL & SHALL HAVE SMOOTH INTERIOR SURFACES. THE DIAMETER SHALL BE NOT LESS THAN 4 INCHES NOMINAL (100 MM) & THE THICKNESS SHALL BE NOT LESS THAN 0.016 OF AN INCH (0.406 MM). EXHAUST DUCTS & DRYER VENTS SHALL BE EQUIPPED WITH BACK DRAFT DAMPERS

MP10 NEW WATER HEATER WITH T&P RELIEF VALVE AND DISCHARGE PIPE AT EXTERIOR. PROVIDE COMBUSTION AIR AND CLEARANCES PER MANUFACTURER REQUIREMENTS.

MP11 NEW WATER HEATERS SHALL HAVE ISOLATION VALVES ON BOTH THE COLD AND THE HOT WATER PIPING LEAVING THE WATER HEATER COMPLETE WITH HOSE BIBS OR OTHER FITTINGS ON EACH VALVES FOR FLUSHING THE WATER HEATER WHEN THE VALVES ARE CLOSED

MP12 ALL DOMESTIC HOT WATER PIPING TO HAVE THE FOLLOWING MINIMUM INSULATION INSTALLED.
¾" PIPE (¾" INSULATION);
¾" PIPE (1" INSULATION);
1" TO 1-1/2" PIPE (1-1/2" INSULATION)

MP13 OUTDOOR CONDENSING UNIT TO BE PIPED TO INDOOR HVAC UNIT

MP14 KITCHEN HOOD CFM TO BE 160 CFM MINIMUM FOR ELECTRIC RANGE, AND 280 CFM MINIMUM FOR GAS RANGE PER CENERGYC TABLE 150.0-G

MP15 WATER HEATERS WITH STORAGE TANKS SHALL BE ANCHORED OR STRAPPED TO RESIST HORIZONTAL DISPLACE DUE TO EARTHQUAKE MOTION. STRAPPING SHALL BE AT POINTS WITH THE UPPER ONE-THIRD AND LOWER ONE-THIRD OF ITS VERTICAL DIMENSIONS. AT THE LOWER POINT, A MIN DISTANCE OF 4 IN SHALL BE MAINTAINED ABOVE THE CONTROLS WITH THE STRAPPING.

ELECTRICAL KEYNOTES

E1 DEDICATED 30 AMP/ 240V POWER FOR ELECTRIC DRYER OR OVEN. VERIFY REQUIREMENTS WITH APPLIANCE SPECIFICATIONS - ELECTRIC COOKTOP READY REQUIREMENTS ARE TO BE IMPLEMENTED, SEE SHEET G0.2, ELECTRIC READY 150.0(u) FOR REQUIREMENTS

E2 OUTLET FOR NEW ELECTRIC HYBRID HEAT PUMP WATER HEATER WITHIN 3' OF WATER HEATER. SEE ELECTRICAL NOTE #16 ON G0.2 FOR MORE INFORMATION

E3 SUBPANEL LOCATION. ALTERNATE LOCATION TO BE DETERMINED BY OWNER

E4 OUTLET AT COUNTER HEIGHT - SHALL COMPLY WITH CEC ARTICLE 210.52(C): IN KITCHENS A RECEPTACLE OUTLET SHALL BE INSTALLED AT EACH COUNTER SPACE 12" OR WIDER; SHALL BE INSTALLED SO THAT NO POINT ALONG THE WALL IS MORE THAN 24"; ISLAND IN PENINSULAR COUNTERTOPS 12" X 24" LONG (OR GREATER) SHALL HAVE AT LEAST ONCE RECEPTACLE

E5 OUTDOOR LIGHTING FIXTURES ARE REQUIRED TO BE HIGH EFFICACY OR CONTROLLED BY A COMBINATION PHOTOCONTROL / MOTION SENSOR.

E6 OUTLET DEDICATED FOR INDOOR HVAC UNIT

E7 WEATHER RESISTANT TYPE RECEPTACLES GFCI PROTECTED

E8 OVER-CURRENT FEEDER TO EXTEND TO EXISTING PANEL- ALUMINUM CONDUCTOR BURIED UNDER GROUND WITH AWG ALLOWABLE VOLTAGE DROP PER CEC 250.4

E9 SEPARATE GROUND ELECTRODE SYSTEM PER CEC 250.4

E10 OUTDOOR CONDENSING UNIT RECEPTACLE OUTLET SHALL BE INSTALLED AT AN ACCESSIBLE LOCATION FOR THE SERVICING OF THE HEATING AND COOLING EQUIPMENT AND SHALL BE LOCATED ON THE SAME LEVEL AND WITHIN 25 FEET OF THE EQUIPMENT. THIS RECEPTACLE SHALL BE GFCI-WP PROTECTED.

E11 A DISCONNECTING MEANS CAPABLE OF DISCONNECTING AIR-CONDITIONING AND REFRIGERATING EQUIPMENT, INCLUDING MOTOR-COMPRESSORS AND CONTROLLERS FROM THE CIRCUIT CONDUCTOR IS REQUIRED WITHIN SIGHT FROM THE EQUIPMENT LOCATION PER CEC SECTION 440.11

E12 PER CEC 2022 150.0(N).1.A.: THE DESIGNATED SPACE IS WITHIN 3 FEET FROM THE WATER HEATER AND IS TO COMPLY WITH ELECTRICAL NOTES 15&16 ON SHEET G0.2

E13 MAIN PANELBOARD LOCATION SHALL HAVE A MINIMUM BUSBAR RATING OF 225 AMPS.

E14 ALL SINGLE-FAMILY RESIDENCES THAT INCLUDE ONE OR TWO DWELLING UNITS SHALL MEET THE FOLLOWING ENERGY STORAGE SYSTEMS (ESS) READY REQUIREMENTS. ALL ELECTRICAL COMPONENTS SHALL BE INSTALLED IN ACCORDANCE WITH THE CEC. SEE SHEET G0.2, ELECTRIC READY 150.0(s) FOR REQUIREMENTS

E15 SUFFICIENT SPACE SHALL BE RESERVED TO ALLOW FUTURE INSTALLATION OF A SYSTEM ISOLATION EQUIPMENT/TRANSFER SWITCH WITHIN 3FT OF THE MAIN PANELBOARD. RACEWAYS SHALL BE INSTALLED BETWEEN THE PANELBOARD & THE SYSTEM ISOLATION EQUIPMENT/TRANSFER SWITCH LOCATION TO ALLOW THE CONNECTION OF BACKUP POWER SOURCE.

E16 LIGHTS OVER TUBS AND SHOWERS ARE TO BE MARKED FOR DAMP/WET LOCATIONS WHERE SUBJECT TO SHOWER SPRAY

MECHANICAL LEGEND

MECHANICAL

BATHROOM EXHAUST FAN: MINIMUM 50 CFM TO BE DUCTED TO THE EXTERIOR AND SHALL PROVIDE FIVE AIR CHANGES PER HOUR. CFM AND NOISE RATING MAXIMUM 3 SONE FOR INTERMITTENT USE. SHALL BE ENERGY STAR RATED AND CONTROLLED BY A HUMIDISTAT CAPABLE OF AN ADJUSTMENT BETWEEN 50-80% HUMIDITY.
IQA FAN IS REQUIRED. ONE OR MORE FANS (EITHER KITCHEN OR BATHROOM) TO OPERATE CONTINUOUSLY AT REQUIRED CFM PER HERS NOTES ON T1.1(OR GREATER) TO PROVIDE INDOOR AIR QUALITY. AT THE IAQ FAN SWITCH, A LABEL CLEARLY DISPLAYING THE FOLLOWING OR EQUIVALENT TEXT IS REQUIRED: "THIS SWITCH CONTROLS THE INDOOR AIR QUALITY VENTILATION FOR THE HOME. LEAVE IT ON UNLESS THE OUTDOOR AIR QUALITY IS VERY POOR.

DUCT SYSTEMS ARE SIZED, DESIGNED AND EQUIPMENT IS SELECTED USING THE FOLLOWING METHODS:
1. ESTABLISH HEAT LOSS AND HEAT GAIN VALUES ACCORDING TO ANSI/ ACCA 2 MANUAL J-2011 OR EQUIVALENT.
2. SIZE DUCT SYSTEMS ACCORDING TOASHARE STANDARD 62.2 TABLE 7.1 PROVIDED ON THIS SHEET
3. SELECT HEATING AND COOLING EQUIPMENT ACCORDING TO ANSI/ ACCA 3 MANUAL S-2014 OR EQUIVALENT .

RETURN AIR GRILLE, WALL MOUNTED

SUPPLY AIR DIFFUSER, WALL MOUNTED

T THERMOSTAT

HOSE BIB

ELECTRICAL LEGEND

FIRE DETECTION

SM SMOKE DETECTORS PER SECTION R314 DETECTORS SHALL BE PERMANENTLY WIRED WITH BATTERY BACKUP. SOUND AN ALARM AUDIBLE IN ALL SLEEPING AREAS. ALARM DEVICES SHALL BE INTERCONNECTED IN SUCH A MANNER THAT THE ACTUATION OF ONE ALARM WILL ACTIVATE ALL O F THE ALARMS IN THE UNIT.
SHALL COMPLY WITH THE FOLLOWING:
- AT LEAST 3' FROM THE TIP OF THE BLADE OF A CEILING-MOUNTED FAN
- NOT LESS THAN 3' FROM THE DOOR OPENING OF A BATHROOM
- AT LEAST 20' FROM A COOKING APPLIANCE OR 10' FROM COOKING APPLIANCE WHEN THE ALARM IS AN IONIZING SMOKE ALARM PER NFPA 72 SECTION 29.8.3.4 ITEM 4
- SMOKE ALARMS TO BE IONIZATION SMOKE ALARMS WITH ALARM SILENCING SWITCH, OR PHOTOELECTRIC SMOKE ALARM.
- AT LEAST 3' FROM SUPPLY REGISTERS OF A HEATING /COOLING SYSTEM

CM CARBON MONOXIDE ALARM PERMANENTLY WIRED WITH BATTERY BACKUP PER SECTION R315. ALARMS SHALL BE INTERCONNECTED IN SUCH A MANNER THAT THE ACTUATION OF ONE ALARM WILL ACTIVATE ALL O F THE ALARMS IN THE UNIT.

POWER/DATA

TAMPER RESISTANT RECEPTACLE WALL MOUNTED, 110 V DUPLEX U.O.N.

GFI = WATER PROOF GFCI
CT = COOKTOP/ GRILL 240 V
O = OVEN 240 V
MW = MICROWAVE 110 V
GD = GARBAGE DISPOSAL 110 V
R = RANGE 220V
C = COUNTER HEIGHT 6" ABV COUNTER
IDU = INDOOR UNIT POWER 84" AFF
W/D = WASHER/DRYER 30AMP/ 240AMP

PHONE / DATA / MEDIA

CEILING, WATERPROOF OUTLET

FLOOR MOUNTED DUPLEX RECEPTACLE, VERIFY LOCATION IN FIELD.

SPECIAL PURPOSE CONNECTION (VOLTAGE SHALL MATCH APPLIANCE REQ.)

SUB PANEL

SWITCHING

$ SWITCH, MOUNT AT 43" AFF
$3 THREE-WAY SWITCH
$4 FOUR-WAY SWITCH
$D DIMMER SWITCH
$C MOUNT 6" ABV COUNTER
$S OCCUPANCY/VACANCY SENSOR

MISC.

CEILING FAN/LIGHT COMBO

CIRCUIT WIRING

DOOR BELL BUTTON

LIGHTING

R CEILING, RECESSED, DIRECTIONAL, ZERO CLEARANCE IC RATED LED BULB

RZC CEILING, RECESSED, ZERO CLEARANCE IC RATED LED BULB

RZC-WR CEILING, RECESSED, ZERO CLEARANCE IC RATED, WATER RESISTANT, LED BULB

RVS CEILING, RECESSED, LED BULB WITH OCCUPANT OR VACANCY SENSOR

WALL MOUNTED LIGHT

J JUNCTION BOX FLUSH CEILING MOUNTED

UC UNDER COUNTER LIGHTING

LV LOW VOLTAGE, LANDSCAPE LIGHT

FLUORESCENT FIXTURE (USE SHALLOW TYPE WHEN UNDER COUNTER)

ASHRAE Standard 62.2 Table 7.1

Table 7.1 Prescriptive Duct Sizing Requirements

Duct Type	Flex Duct				Smooth Duct			
Fan Rating cfm @ 0.25 in. w.g.	50	80	100	125	50	80	100	125
	Maximum Allowable Duct Length (ft)							
Diameter: (in)	Flex Duct				Smooth Duct			
3	X	X	X	X	5	X	X	X
4	70	5	X	X	105	35	5	X
5	NL	70	35	20	NL	135	85	55
6	NL	NL	125	75	NL	NL	NL	165
7 and above	NL	NL	NL	NL	NL	NL	NL	NL

This table assumes no elbows. Deduct 15 ft of allowable duct length for each turn, elbow, or fitting.
NL = no limit on duct length of this size
X = not allowed, any length of duct of this size with assumed turns, elbows, fittings will exceed the rated pressure drop.

BATHROOM EXHAUST FAN REQUIREMENTS: PER CGBC 4.506.1-

EACH BATHROOM SHALL BE MECHANICALLY VENTILATED AND SHALL COMPLY WITH THE FOLLOWING: 1. FANS SHALL BE ENERGY STAR COMPLIANT AND BE DUCTED TO TERMINATE OUTSIDE THE BUILDING. 2. UNLESS FUNCTIONING AS A COMPONENT OF A WHOLE HOUSE VENTILATION SYSTEM, FANS MUST BE CONTROLLED BY A HUMIDITY CONTROL. A. HUMIDITY CONTROLS SHALL BE CAPABLE OF ADJUSTMENT BETWEEN A RELATIVE HUMIDITY RANGE OF <= 50 % TO A MAXIMUM OF 80 %. A HUMIDITY CONTROL MAY UTILIZE MANUAL OR AUTOMATIC MEANS OF ADJUSTMENT. B. A HUMIDITY CONTROL MAY BE A SEPARATE COMPONENT TO EXHAUST FAN AND IS NOT REQUIRED TO BE INTEGRAL(I.E. BUILT IN)

RESIDENTIAL ENERGY LIGHTING REQUIREMENTS:ES 150.0(K)

*IN THE KITCHEN, AT LEAST ONE-HALF OF THE WATTAGE RATING OF THE FIXTURES MUST BE HIGH EFFICACY.
*BATHROOMS, GARAGES, LAUNDRY ROOMS, UTILITY ROOMS AND WALK-IN CLOSETS, AT LEAST ONE INSTALLED LUMINAIRE SHALL BE CONTROLLED BY AN OCCUPANCY OR VACANCY SENSOR PROVIDING AUTOMATIC-OFF FUNCTIONALITY.
*ALL THROUGHOUT THE RESIDENCE, INCLUDING THE GARAGE AND EXTERIOR, SHALL BE HIGH EFFICIENCY.

FOR USE IN IN THE CITY OF PERRIS

DESIGN PATH STUDIO
architecture + engineering + planning
DESIGNPATHSTUDIO.COM

BY USING THESE PERMIT READY CONSTRUCTION DOCUMENTS, THE RECIPIENT ACKNOWLEDGES, ACCEPTS AND VOLUNTARILY AFFIRMS THE FOLLOWING CONDITIONS:
1. THE USE OF THIS INFORMATION IS RESTRICTED TO THE ORIGINAL PROJECT FOR WHICH IT WAS PREPARED FOR THE PERMIT READY ACCESSORY DWELLING UNIT (ADU) PROGRAM FOR THE CITY OF PERRIS ONLY. THIS IS A LIMITED SET OF STANDARDIZED ADU PLANS AND SPECIFICATIONS APPROVED BY THE CITY OF PERRIS BUILDING DEPARTMENT. BUILDING CODES DO CHANGE OVER TIME AND RECIPIENT SHALL ENSURE FULL COMPLIANCE UNDER ALL CODES THEN IN EFFECT AT THE TIME OF THE SUBJECT PERMIT. THIS DOES NOT ELIMINATE OR REDUCE THE RECIPIENT'S RESPONSIBILITY TO VERIFY ANY AND ALL INFORMATION RELEVANT TO THE RECIPIENT'S WORK AND RESPONSIBILITY ON THIS PROJECT. DESIGN PATH STUDIO SHALL NOT BE RESPONSIBLE FOR TRANSLATION ERRORS. DO NOT USE THESE CONSTRUCTION DOCUMENTS IF THE PERMIT HAS EXPIRED OR IS REVOKED AT ALL.
2. THE RECIPIENT RECOGNIZES AND ACKNOWLEDGES THAT THE USE OF THIS INFORMATION WILL BE AT THEIR SOLE RISK AND WITHOUT ANY LIABILITY OR LEGAL EXPOSURE TO DESIGN PATH STUDIO. NO WARRANTIES OF ANY NATURE, WHETHER EXPRESS OR IMPLIED, SHALL ATTACH TO THESE DOCUMENTS AND THE INFORMATION CONTAINED THEREON. ANY USE, REUSE, OR ALTERATION OF THESE DOCUMENTS BY THE RECIPIENT OR BY OTHERS WILL BE AT THE RECIPIENT'S RISK AND FULL LEGAL RESPONSIBILITY. FURTHERMORE, THE RECIPIENT WILL, TO THE FULLEST EXTENT PERMITTED BY LAW, DEFEND, INDEMNIFY AND HOLD DESIGN PATH STUDIO AND ITS ARCHITECTS HARMLESS FROM ANY AND ALL CLAIMS, SUITS, LIABILITY, DEMANDS, JUDGMENTS, OR COSTS ARISING OUT OF OR RESULTING THERE FROM ANY USE OF THESE CONSTRUCTION DOCUMENTS FOR OR ON ACCOUNT OF ANY INJURY, DEATH, DAMAGE OR LOSS TO PERSONS OR PROPERTY, DIRECT OR CONSEQUENTIAL DAMAGES IN ANY AMOUNT. THIS INDEMNITY DOES NOT APPLY TO THE SOLE NEGLIGENCE OR WILLFUL MISCONDUCT OF DESIGN PATH STUDIO OR ITS ARCHITECTS.
3. THE DESIGNS REPRESENTED BY THESE PLANS ARE COPYRIGHTED AND ARE SUBJECT TO COPYRIGHT PROTECTION.
4. IF THE RECIPIENT DOES NOT AGREE WITH THE ABOVE CONDITIONS, DO NOT PROCEED WITH CONSTRUCTION OF AN ADU OR OTHER IMPROVEMENT UNDER THESE PLANS AT ALL.

project
City of Perris
Pre-Approved
ADU Program

revisions
1

description
Electrical
Plans

date	4 April 2025
project no.	PERRIS PRADU
drawn by	DESIGN PATH STUDIO
sheet no.	A2.1

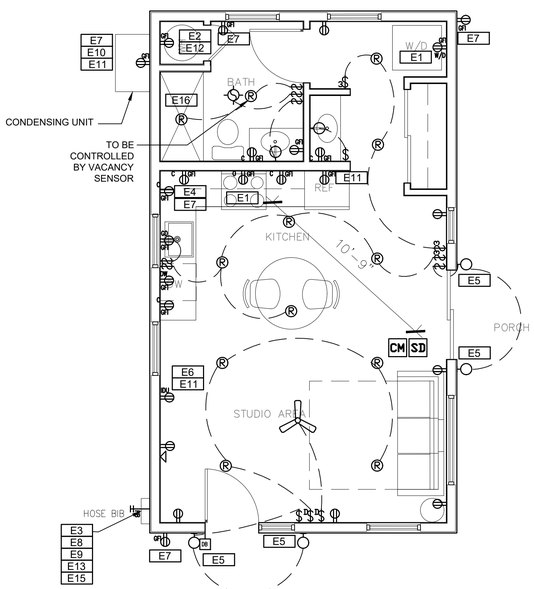

ELECTRICAL PLAN

1/4"=1'-0" REVERSE

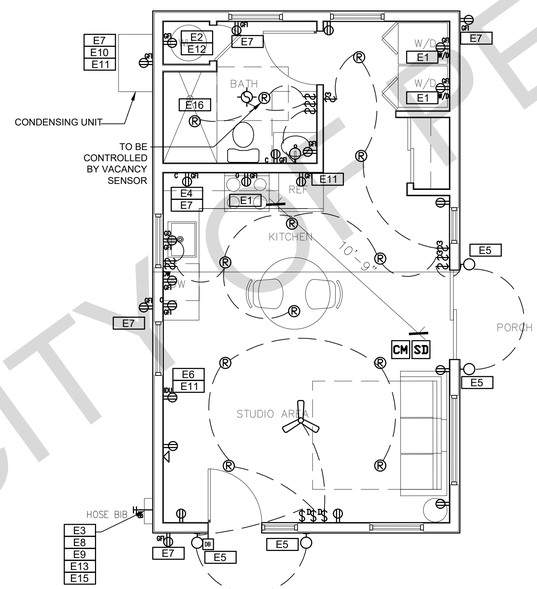

MANEUVERING OPTION

1/4"=1'-0" REVERSE

MECHANICAL / PLUMBING KEYNOTES

MP1 INDOOR UNIT MINI SPLIT SYSTEM.

MP2 WATER CONSERVING FIXTURES: NEW WATER CLOSETS SHALL USE NO MORE THAN 1.28 GAL. OF WATER PER FLUSH, LAVATORIES LIMITED TO 1.2 GPM, KITCHEN FAUCETS NOT TO EXCEED 1.8 GPM AT 60 PSI THEY CAN INCREASE THE FLOW MOMENTARILY BUT CANT EXCEED 2.2GALLONS PER MIN. AT 60 PSI AND MUST DEFAULT TO A MAX. FLOW RATE OF 1.8GALLONS PER MIN AT 60 PSI., AND SHOWERS NOT EXCEED 1.8 GPM. AT 80 PSI AND ALL SHALL BE CERTIFIED TO MEET THE PERFORMANCE CRITERIA OF THE EPA WATERSENCE SPECIFICATIONS FOR SHOWERHEADS. CPC SECTIONS 407, 408, 411, 412 AND SECTION 301.1.1 CALGREEN CODE AND CIVIL CODE 1101.3(c)

MP3 EXHAUST HOOD ABOVE/ TO BE SMOOTH METALLIC INTERIOR SURFACE (CMC 504.3)

MP4 NEW WATER HEATER PER T24 REQUIREMENTS - TO HAVE CONDENSATE DRAIN INSTALLED NO HIGHER THAN 2" ABOVE THE BASE OF THE HEATER THAT ALSO ALLOWS GRAVITY DRAINAGE PLEASE SEE TABLE 501.1(2) ON THIS SHEET FOR FIRST HOUR RATING IN GALLONS

MP5 CONTROL VALVES IN SHOWERS, BATHTUBS, & BIDETS MUST BE PRESSURE BALANCED OR THERMOSTATIC MIX VALVES

MP6 MINIMUM OF 3 FT CLEARANCE TO ANY OPENING INTO BUILDING FOR EXHAUST FAN TERMINATIONS

MP7 CLEARANCE FOR WATER CLOSET TO BE A MIN. OF 24" IN FRONT, AND 18" FROM ITS CENTER TO ANY SIDE WALL OR OBSTRUCTION. (CPC 402.5)

MP8 THE 1/2" SIZE HOT WATER PIPE TO THE KITCHEN SINK AND THE COLD WATER PIPE WITHIN 5' OF WATER HEATER BOTH REQUIRE 1" INSULATION

MP9 DRYER EXHAUST OUTLET FROM DRYER TO EXTERIOR MAX LENGTH 14' WITH MAXIMUM OF TWO 90° ELBOWS.EXHAUST VENT MUST TERMINATE A MIN. OF 3' FROM ANY OPENING. MIN. TYPE 1 CLOTHES DRYER EXHAUST DUCTS SHALL BE OF RIGID METAL & SHALL HAVE SMOOTH INTERIOR SURFACES. THE DIAMETER SHALL BE NOT LESS THAN 4 INCHES NOMINAL (100 MM) & THE THICKNESS SHALL BE NOT LESS THAN 0.016 OF AN INCH (0.406 MM). EXHAUST DUCTS & DRYER VENTS SHALL BE EQUIPPED WITH BACK DRAFT DAMPERS

MP10 NEW WATER HEATER WITH T&P RELIEF VALVE AND DISCHARGE PIPE AT EXTERIOR. PROVIDE COMBUSTION AIR AND CLEARANCES PER MANUFACTURER REQUIREMENTS.

MP11 NEW WATER HEATERS SHALL HAVE ISOLATION VALVES ON BOTH THE COLD AND THE HOT WATER PIPING LEAVING THE WATER HEATER COMPLETE WITH HOSE BIBS OR OTHER FITTINGS ON EACH VALVES FOR FLUSHING THE WATER HEATER WHEN THE VALVES ARE CLOSED

MP12 ALL DOMESTIC HOT WATER PIPING TO HAVE THE FOLLOWING MINIMUM INSULATION INSTALLED:
3/4" PIPE (3/4" INSULATION);
3/4" PIPE (1" INSULATION);
1" TO 1-1/2" PIPE (1-1/2" INSULATION)

MP13 OUTDOOR CONDENSING UNIT TO BE PIPED TO INDOOR HVAC UNIT

MP14 KITCHEN HOOD CFM TO BE 160 CFM MINIMUM FOR ELECTRIC RANGE, AND 280 CFM MINIMUM FOR GAS RANGE PER CENERGYC TABLE 150.0-G

MP15 WATER HEATERS WITH STORAGE TANKS SHALL BE ANCHORED OR STRAPPED TO RESIST HORIZONTAL DISPLACE DUE TO EARTHQUAKE MOTION. STRAPPING SHALL BE AT POINTS WITH THE UPPER ONE-THIRD AND LOWER ONE-THIRD OF ITS VERTICAL DIMENSIONS. AT THE LOWER POINT, A MIN DISTANCE OF 4 IN SHALL BE MAINTAINED ABOVE THE CONTROLS WITH THE STRAPPING.

ELECTRICAL KEYNOTES

E1 DEDICATED 30 AMP/ 240V POWER FOR ELECTRIC DRYER OR OVEN. VERIFY REQUIREMENTS WITH APPLIANCE SPECIFICATIONS - ELECTRIC COOKTOP READY REQUIREMENTS ARE TO BE IMPLEMENTED, SEE SHEET G0.2, ELECTRIC READY 150.0(u) FOR REQUIREMENTS

E2 OUTLET FOR NEW ELECTRIC HYBRID HEAT PUMP WATER HEATER WITHIN 3' OF WATER HEATER. SEE ELECTRICAL NOTE #16 ON G0.2 FOR MORE INFORMATION

E3 SUBPANEL LOCATION. ALTERNATE LOCATION TO BE DETERMINED BY OWNER

E4 OUTLET AT COUNTER HEIGHT - SHALL COMPLY WITH CEC ARTICLE 210.52(C): IN KITCHENS A RECEPTACLE OUTLET SHALL BE INSTALLED AT EACH COUNTER SPACE 12" OR WIDER; SHALL BE INSTALLED SO THAT NO POINT ALONG THE WALL IS MORE THAN 24"; ISLAND IN PENINSULAR COUNTERTOPS 12" X 24" LONG (OR GREATER) SHALL HAVE AT LEAST ONCE RECEPTACLE

E5 OUTDOOR LIGHTING FIXTURES ARE REQUIRED TO BE HIGH EFFICACY OR CONTROLLED BY A COMBINATION PHOTOCONTROL / MOTION SENSOR.

E6 OUTLET DEDICATED FOR INDOOR HVAC UNIT

E7 WEATHER RESISTANT TYPE RECEPTACLES GFCI PROTECTED

E8 OVER-CURRENT FEEDER TO EXTEND TO EXISTING PANEL- ALUMINUM CONDUCTOR BURIED UNDER GROUND WITH AWG ALLOWABLE VOLTAGE DROP PER CEC 250.4

E9 SEPARATE GROUND ELECTRODE SYSTEM PER CEC 250.4

E10 OUTDOOR CONDENSING UNIT RECEPTACLE OUTLET SHALL BE INSTALLED AT AN ACCESSIBLE LOCATION FOR THE SERVICING OF THE HEATING AND COOLING EQUIPMENT AND SHALL BE LOCATED ON THE SAME LEVEL AND WITHIN 25 FEET OF THE EQUIPMENT. THIS RECEPTACLE SHALL BE GFCI-WP PROTECTED.

E11 A DISCONNECTING MEANS CAPABLE OF DISCONNECTING AIR-CONDITIONING AND REFRIGERATING EQUIPMENT, INCLUDING MOTOR-COMPRESSORS AND CONTROLLERS FROM THE CIRCUIT CONDUCTOR IS REQUIRED WITHIN SIGHT FROM THE EQUIPMENT LOCATION PER CEC SECTION 440.11

E12 PER CEC 2022 150.0(N).1.A.: THE DESIGNATED SPACE IS WITHIN 3 FEET FROM THE WATER HEATER AND IS TO COMPLY WITH ELECTRICAL NOTES 15&16 ON SHEET G0.2

E13 MAIN PANELBOARD LOCATION SHALL HAVE A MINIMUM BUSBAR RATING OF 225 AMPS.

E14 ALL SINGLE-FAMILY RESIDENCES THAT INCLUDE ONE OR TWO DWELLING UNITS SHALL MEET THE FOLLOWING ENERGY STORAGE SYSTEMS (ESS) READY REQUIREMENTS. ALL ELECTRICAL COMPONENTS SHALL BE INSTALLED IN ACCORDANCE WITH THE CEC. SEE SHEET G0.2, ELECTRIC READY 150.0(s) FOR REQUIREMENTS

E15 SUFFICIENT SPACE SHALL BE RESERVED TO ALLOW FUTURE INSTALLATION OF A SYSTEM ISOLATION EQUIPMENT/TRANSFER SWITCH WITHIN 3FT OF THE MAIN PANELBOARD. RACEWAYS SHALL BE INSTALLED BETWEEN THE PANELBOARD & THE SYSTEM ISOLATION EQUIPMENT/TRANSFER SWITCH LOCATION TO ALLOW THE CONNECTION OF BACKUP POWER SOURCE.

E16 LIGHTS OVER TUBS AND SHOWERS ARE TO BE MARKED FOR DAMP/WET LOCATIONS WHERE SUBJECT TO SHOWER SPRAY

MECHANICAL LEGEND

MECHANICAL

BATHROOM EXHAUST FAN: MINIMUM 50 CFM TO BE DUCTED TO THE EXTERIOR AND SHALL PROVIDE FIVE AIR CHANGES PER HOUR. CFM AND NOISE RATING MAXIMUM 3 SONE FOR INTERMITTENT USE. SHALL BE ENERGY STAR RATED AND CONTROLLED BY A HUMIDISTAT CAPABLE OF AN ADJUSTMENT BETWEEN 50-80% HUMIDITY.
IQA FAN IS REQUIRED. ONE OR MORE FANS (EITHER KITCHEN OR BATHROOM) TO OPERATE CONTINUOUSLY AT REQUIRED CFM PER HERS NOTES ON T1.1(OR GREATER) TO PROVIDE INDOOR AIR QUALITY. AT THE IAQ FAN SWITCH, A LABEL CLEARLY DISPLAYING THE FOLLOWING OR EQUIVALENT TEXT IS REQUIRED: "THIS SWITCH CONTROLS THE INDOOR AIR QUALITY VENTILATION FOR THE HOME. LEAVE IT ON UNLESS THE OUTDOOR AIR QUALITY IS VERY POOR.

DUCT SYSTEMS ARE SIZED, DESIGNED AND EQUIPMENT IS SELECTED USING THE FOLLOWING METHODS:
1. ESTABLISH HEAT LOSS AND HEAT GAIN VALUES ACCORDING TO ANSI/ ACCA 2 MANUAL J-2011 OR EQUIVALENT.
2. SIZE DUCT SYSTEMS ACCORDING TOASHARE STANDARD 62.2 TABLE 7.1 PROVIDED ON THIS SHEET
3. SELECT HEATING AND COOLING EQUIPMENT ACCORDING TO ANSI/ ACCA 3 MANUAL S-2014 OR EQUIVALENT .

RETURN AIR GRILLE, WALL MOUNTED

SUPPLY AIR DIFFUSER, WALL MOUNTED

T THERMOSTAT

HOSE BIB

ELECTRICAL LEGEND

FIRE DETECTION

SM SMOKE DETECTORS PER SECTION R314 DETECTORS SHALL BE PERMANENTLY WIRED WITH BATTERY BACKUP. SOUND AN ALARM AUDIBLE IN ALL SLEEPING AREAS. ALARM DEVICES SHALL BE INTERCONNECTED IN SUCH A MANNER THAT THE ACTUATION OF ONE ALARM WILL ACTIVATE ALL O F THE ALARMS IN THE UNIT.
SHALL COMPLY WITH THE FOLLOWING:
- AT LEAST 3' FROM THE TIP OF THE BLADE OF A CEILING-MOUNTED FAN
- NOT LESS THAN 3' FROM THE DOOR OPENING OF A BATHROOM
- AT LEAST 20' FROM A COOKING APPLIANCE OR 10' FROM COOKING APPLIANCE WHEN THE ALARM IS AN IONIZING SMOKE ALARM PER NFPA 72 SECTION 29.8.3.4 ITEM 4
- SMOKE ALARMS TO BE IONIZATION SMOKE ALARMS WITH ALARM SILENCING SWITCH, OR PHOTOELECTRIC SMOKE ALARM.
- AT LEAST 3' FROM SUPPLY REGISTERS OF A HEATING /COOLING SYSTEM

CM CARBON MONOXIDE ALARM PERMANENTLY WIRED WITH BATTERY BACKUP PER SECTION R315. ALARMS SHALL BE INTERCONNECTED IN SUCH A MANNER THAT THE ACTUATION OF ONE ALARM WILL ACTIVATE ALL O F THE ALARMS IN THE UNIT.

POWER/DATA

TAMPER RESISTANT RECEPTACLE WALL MOUNTED, 110 V DUPLEX U.O.N.

GFI = WATER PROOF GFCI
CT = COOKTOP/ GRILL 240 V
O = OVEN 240 V
MW = MICROWAVE 110 V
GD = GARBAGE DISPOSAL 110 V
R = RANGE 220V
C = COUNTER HEIGHT 6" ABV COUNTER
IDU = INDOOR UNIT POWER 84" AFF
W/D = WASHER/DRYER 30AMP/ 240AMP

PHONE / DATA / MEDIA

CEILING, WATERPROOF OUTLET

FLOOR MOUNTED DUPLEX RECEPTACLE, VERIFY LOCATION IN FIELD.

SPECIAL PURPOSE CONNECTION (VOLTAGE SHALL MATCH APPLIANCE REQ.)

SUB PANEL

SWITCHING

$ SWITCH, MOUNT AT 43" AFF
$3 THREE-WAY SWITCH
$4 FOUR-WAY SWITCH
$D DIMMER SWITCH
$C MOUNT 6" ABV COUNTER
$S OCCUPANCY/VACANCY SENSOR

MISC.

CEILING FAN/LIGHT COMBO

CIRCUIT WIRING

DOOR BELL BUTTON

LIGHTING

R CEILING, RECESSED, DIRECTIONAL, ZERO CLEARANCE IC RATED LED BULB

RZC CEILING, RECESSED, ZERO CLEARANCE IC RATED LED BULB

RZC-WR CEILING, RECESSED, ZERO CLEARANCE IC RATED, WATER RESISTANT, LED BULB

RVS CEILING, RECESSED, LED BULB WITH OCCUPANT OR VACANCY SENSOR

WALL MOUNTED LIGHT

J JUNCTION BOX FLUSH CEILING MOUNTED

UC UNDER COUNTER LIGHTING

SLV LOW VOLTAGE, LANDSCAPE LIGHT

FLUORESCENT FIXTURE (USE SHALLOW TYPE WHEN UNDER COUNTER)

ASHRAE Standard 62.2 Table 7.1

Table 7.1 Prescriptive Duct Sizing Requirements

Duct Type	Flex Duct				Smooth Duct			
Fan Rating cfm @ 0.25 in. w.g.	50	80	100	125	50	80	100	125
	Maximum Allowable Duct Length (ft)							
Diameter, (in)	Flex Duct				Smooth Duct			
3	X	X	X	X	5	X	X	X
4	70	5	X	X	105	35	5	X
5	NL	70	35	20	NL	135	85	55
6	NL	NL	125	75	NL	NL	NL	165
7 and above	NL	NL	NL	NL	NL	NL	NL	NL

This table assumes no elbows. Deduct 15 ft of allowable duct length for each turn, elbow, or fitting.
NL = no limit on duct length of this size
X = not allowed, any length of duct of this size with assumed turns, elbows, fittings will exceed the rated pressure drop.

BATHROOM EXHAUST FAN REQUIREMENTS: PER CGBC 4.506.1-
EACH BATHROOM SHALL BE MECHANICALLY VENTILATED AND SHALL COMPLY WITH THE FOLLOWING: 1. FANS SHALL BE ENERGY STAR COMPLIANT AND BE DUCTED TO TERMINATE OUTSIDE THE BUILDING. 2. UNLESS FUNCTIONING AS A COMPONENT OF A WHOLE HOUSE VENTILATION SYSTEM, FANS MUST BE CONTROLLED BY A HUMIDITY CONTROL. A. HUMIDITY CONTROLS SHALL BE CAPABLE OF ADJUSTMENT BETWEEN A RELATIVE HUMIDITY RANGE OF <= 50 % TO A MAXIMUM OF 80 %. A HUMIDITY CONTROL MAY UTILIZE MANUAL OR AUTOMATIC MEANS OF ADJUSTMENT. B. A HUMIDITY CONTROL MAY BE A SEPARATE COMPONENT TO EXHAUST FAN AND IS NOT REQUIRED TO BE INTEGRAL(I.E. BUILT IN)

RESIDENTIAL ENERGY LIGHTING REQUIREMENTS:ES 150.0(K)
*IN THE KITCHEN, AT LEAST ONE-HALF OF THE WATTAGE RATING OF THE FIXTURES MUST BE HIGH EFFICACY.
*BATHROOMS, GARAGES, LAUNDRY ROOMS, UTILITY ROOMS AND WALK-IN CLOSETS, AT LEAST ONE INSTALLED LUMINAIRE SHALL BE CONTROLLED BY AN OCCUPANCY OR VACANCY SENSOR PROVIDING AUTOMATIC-OFF FUNCTIONALITY.
*ALL THROUGHOUT THE RESIDENCE, INCLUDING THE GARAGE AND EXTERIOR, SHALL BE HIGH EFFICIENCY.

FOR USE IN THE CITY OF PERRIS

DESIGN PATH STUDIO
architecture + engineering + planning
DESIGNPATHSTUDIO.COM

BY USING THESE PERMIT READY CONSTRUCTION DOCUMENTS, THE RECIPIENT ACKNOWLEDGES, ACCEPTS AND VOLUNTARILY AFFIRMS THE FOLLOWING CONDITIONS:
1. THE USE OF THIS INFORMATION IS RESTRICTED TO THE ORIGINAL PROJECT FOR WHICH IT WAS PREPARED FOR THE PERMIT READY ACCESSORY DWELLING UNIT (ADU) PROGRAM FOR THE CITY OF PERRIS ONLY. THIS IS A LIMITED SET OF STANDARDIZED ADU PLANS AND SPECIFICATIONS APPROVED BY THE CITY OF PERRIS BUILDING DEPARTMENT. BUILDING CODES DO CHANGE OVER TIME AND RECIPIENT SHALL ENSURE FULL COMPLIANCE UNDER ALL CODES THEN IN EFFECT AT THE TIME OF THE SUBJECT PERMIT. THIS DOES NOT ELIMINATE OR REDUCE THE RECIPIENT'S RESPONSIBILITY TO VERIFY ANY AND ALL INFORMATION RELEVANT TO THE RECIPIENT'S WORK AND RESPONSIBILITY ON THIS PROJECT. DESIGN PATH STUDIO SHALL NOT BE RESPONSIBLE FOR TRANSLATION ERRORS. DO NOT USE THESE CONSTRUCTION DOCUMENTS IF THE PERMIT HAS EXPIRED OR IS REVOKED AT ALL.
2. THE RECIPIENT RECOGNIZES AND ACKNOWLEDGES THAT THE USE OF THIS INFORMATION WILL BE AT THEIR SOLE RISK AND WITHOUT ANY LIABILITY OR LEGAL EXPOSURE TO DESIGN PATH STUDIO. NO WARRANTIES OF ANY NATURE, WHETHER EXPRESS OR IMPLIED, SHALL ATTACH TO THESE DOCUMENTS AND THE INFORMATION CONTAINED THEREON. ANY USE, REUSE, OR ALTERATION OF THESE DOCUMENTS BY THE RECIPIENT OR BY OTHERS WILL BE AT THE RECIPIENT'S RISK AND FULL LEGAL RESPONSIBILITY. FURTHERMORE, THE RECIPIENT WILL, TO THE FULLEST EXTENT PERMITTED BY LAW, DEFEND, INDEMNIFY AND HOLD DESIGN PATH STUDIO AND ITS ARCHITECTS HARMLESS FROM ANY AND ALL CLAIMS, SUITS, LIABILITY, DEMANDS, JUDGMENTS, OR COSTS ARISING OUT OF OR RESULTING THERE FROM ANY USE OF THESE CONSTRUCTION DOCUMENTS FOR OR ON ACCOUNT OF ANY INJURY, DEATH, DAMAGE OR LOSS TO PERSONS OR PROPERTY, DIRECT OR CONSEQUENTIAL DAMAGES IN ANY AMOUNT. THIS INDEMNITY DOES NOT APPLY TO THE SOLE NEGLIGENCE OR WILLFUL MISCONDUCT OF DESIGN PATH STUDIO OR ITS ARCHITECTS.
3. THE DESIGNS REPRESENTED BY THESE PLANS ARE COPYRIGHTED AND ARE SUBJECT TO COPYRIGHT PROTECTION.
4. IF THE RECIPIENT DOES NOT AGREE WITH THE ABOVE CONDITIONS, DO NOT PROCEED WITH CONSTRUCTION OF AN ADU OR OTHER IMPROVEMENT UNDER THESE PLANS AT ALL.

project
City of Perris
Pre-Approved
ADU Program

revisions
1

description
Electrical
Plans
Reverse

date 4 April 2025

project no. PERRIS PRADU

drawn by DESIGN PATH STUDIO

sheet no. A2.1R

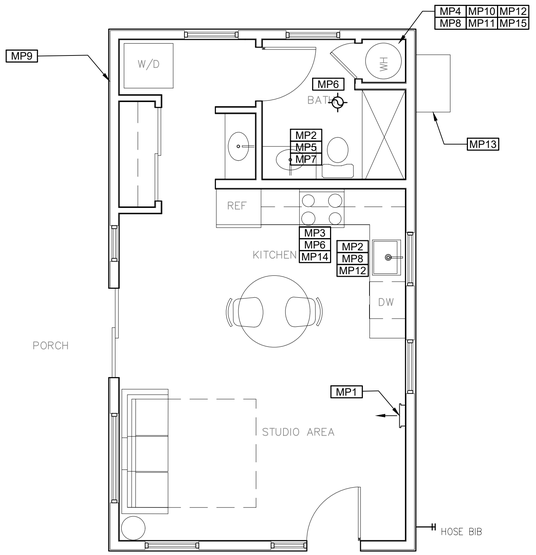

MECHANICAL / PLUMBING PLAN

1/4"=1'-0"

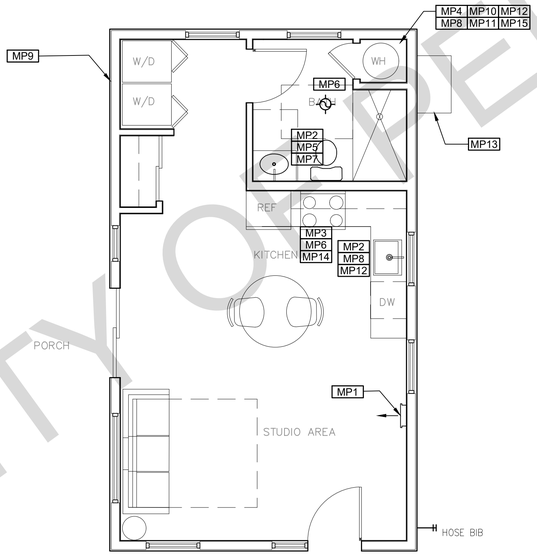

MANEUVERING OPTION

1/4"=1'-0"

FOR USE IN THE CITY OF PERRIS

MECHANICAL / PLUMBING KEYNOTES

MP1 INDOOR UNIT MINI SPLIT SYSTEM.

MP2 WATER CONSERVING FIXTURES: NEW WATER CLOSETS SHALL USE NO MORE THAN 1.28 GAL. OF WATER PER FLUSH, LAVATORIES LIMITED TO 1.2 GPM, KITCHEN FAUCETS NOT TO EXCEED 1.8 GPM AT 60 PSI THEY CAN INCREASE THE FLOW MOMENTARILY BUT CANT EXCEED 2.2GALLONS PER MIN. AT 60 PSI AND MUST DEFAULT TO A MAX. FLOW RATE OF 1.8GALLONS PER MIN AT 60 PSI., AND SHOWERS NOT EXCEED 1.8 GPM. AT 80 PSI AND ALL SHALL BE CERTIFIED TO MEET THE PERFORMANCE CRITERIA OF THE EPA WATERSENCE SPECIFICATIONS FOR SHOWERHEADS. CPC SECTIONS 407, 408, 411, 412 AND SECTION 301.1.1 CALGREEN CODE AND CIVIL CODE 1101.3(c)

MP3 EXHAUST HOOD ABOVE/ TO BE SMOOTH METALLIC INTERIOR SURFACE (CMC 504.3)

MP4 NEW WATER HEATER PER T24 REQUIREMENTS - TO HAVE CONDENSATE DRAIN INSTALLED NO HIGHER THAN 2' ABOVE THE BASE OF THE HEATER THAT ALSO ALLOWS GRAVITY DRAINAGE PLEASE SEE TABLE 501.1(2) ON THIS SHEET FOR FIRST HOUR RATING IN GALLONS.

MP5 CONTROL VALVES IN SHOWERS, BATHTUBS, & BIDETS MUST BE PRESSURE BALANCED OR THERMOSTATIC MIX VALVES

MP6 MINIMUM OF 3 FT CLEARANCE TO ANY OPENING INTO BUILDING FOR EXHAUST FAN TERMINATIONS

MP7 CLEARANCE FOR WATER CLOSET TO BE A MIN. OF 24" IN FRONT, AND 15" FROM ITS CENTER TO ANY SIDE WALL OR OBSTRUCTION. (CPC 402.5)

MP8 THE 1/2" SIZE HOT WATER PIPE TO THE KITCHEN SINK AND THE COLD WATER PIPE WITHIN 5' OF WATER HEATER BOTH REQUIRE 1" INSULATION

MP9 DRYER EXHAUST OUTLET FROM DRYER TO EXTERIOR MAX LENGTH 14', WITH MAXIMUM OF TWO 90° ELBOWS.EXHAUST VENT MUST TERMINATE A MIN. OF 3' FROM ANY OPENING. MIN. TYPE 1 CLOTHES DRYER EXHAUST DUCTS SHALL BE OF RIGID METAL & SHALL HAVE SMOOTH INTERIOR SURFACES. THE DIAMETER SHALL BE NOT LESS THAN 4 INCHES NOMINAL (100 MM). & THE THICKNESS SHALL BE NOT LESS THAN 0.016 OF AN INCH (0.406 MM). EXHAUST DUCTS & DRYER VENTS SHALL BE EQUIPPED WITH BACK DRAFT DAMPERS

MP10 NEW WATER HEATER WITH T&P RELIEF VALVE AND DISCHARGE PIPE AT EXTERIOR, PROVIDE COMBUSTION AIR AND CLEARANCES PER MANUFACTURER REQUIREMENTS.

MP11 NEW WATER HEATERS SHALL HAVE ISOLATION VALVES ON BOTH THE COLD AND THE HOT WATER PIPING LEAVING THE WATER HEATER COMPLETE WITH HOSE BIBS OR OTHER FITTINGS ON EACH VALVES FOR FLUSHING THE WATER HEATER WHEN THE VALVES ARE CLOSED

MP12 ALL DOMESTIC HOT WATER PIPING TO HAVE THE FOLLOWING MINIMUM INSULATION INSTALLED:
3/4" PIPE (3/4" INSULATION);
3/4" PIPE (1" INSULATION);
1" TO 1-1/2" PIPE (1-1/2" INSULATION)

MP13 OUTDOOR CONDENSING UNIT TO BE PIPED TO INDOOR HVAC UNIT

MP14 KITCHEN HOOD CFM TO BE 160 CFM MINIMUM FOR ELECTRIC RANGE, AND 280 CFM MINIMUM FOR GAS RANGE PER CENERGYC TABLE 150.0-G

MP15 WATER HEATERS WITH STORAGE TANKS SHALL BE ANCHORED OR STRAPPED TO RESIST HORIZONTAL DISPLACE DUE TO EARTHQUAKE MOTION. STRAPPING SHALL BE AT POINTS WITH THE UPPER ONE-THIRD AND LOWER ONE-THIRD OF ITS VERTICAL DIMENSIONS. AT THE LOWER POINT, A MIN DISTANCE OF 4 IN SHALL BE MAINTAINED ABOVE THE CONTROLS WITH THE STRAPPING.

ELECTRICAL KEYNOTES

E1 DEDICATED 30 AMP/ 240V POWER FOR ELECTRIC DRYER OR OVEN. VERIFY REQUIREMENTS WITH APPLIANCE SPECIFICATIONS - ELECTRIC COOKTOP READY REQUIREMENTS ARE TO BE IMPLEMENTED, SEE SHEET G0.2, ELECTRIC READY 150.0(u) FOR REQUIREMENTS

E2 OUTLET FOR NEW ELECTRIC HYBRID HEAT PUMP WATER HEATER WITHIN 3' OF WATER HEATER. SEE ELECTRICAL NOTE #16 ON G0.2 FOR MORE INFORMATION

E3 SUBPANEL LOCATION. ALTERNATE LOCATION TO BE DETERMINED BY OWNER

E4 OUTLET AT COUNTER HEIGHT - SHALL COMPLY WITH CEC ARTICLE 210.52(C): IN KITCHENS A RECEPTACLE OUTLET SHALL BE INSTALLED AT EACH COUNTER SPACE 12" OR WIDER. SHALL BE INSTALLED SO THAT NO POINT ALONG THE WALL IS MORE THAN 24"; ISLAND IN PENINSULAR COUNTERTOPS 12" X 24" LONG (OR GREATER) SHALL HAVE AT LEAST ONCE RECEPTACLE

E5 OUTDOOR LIGHTING FIXTURES ARE REQUIRED TO BE HIGH EFFICACY OR CONTROLLED BY A COMBINATION PHOTOCONTROL / MOTION SENSOR.

E6 OUTLET DEDICATED FOR INDOOR HVAC UNIT

E7 WEATHER RESISTANT TYPE RECEPTACLES GFCI PROTECTED

E8 OVER-CURRENT FEEDER TO EXTEND TO EXISTING PANEL- ALUMINUM CONDUCTOR BURIED UNDER GROUND WITH AWG ALLOWABLE VOLTAGE DROP PER CEC 250.4

E9 SEPARATE GROUND ELECTRODE SYSTEM PER CEC 250.4

E10 OUTDOOR CONDENSING UNIT RECEPTACLE OUTLET SHALL BE INSTALLED AT AN ACCESSIBLE LOCATION FOR THE SERVICING OF THE HEATING AND COOLING EQUIPMENT AND SHALL BE LOCATED ON THE SAME LEVEL AND WITHIN 25 FEET OF THE EQUIPMENT. THIS RECEPTACLE SHALL BE GFCI-WP PROTECTED.

E11 A DISCONNECTING MEANS CAPABLE OF DISCONNECTING AIR-CONDITIONING AND REFRIGERATING EQUIPMENT, INCLUDING MOTOR-COMPRESSORS AND CONTROLLERS FROM THE CIRCUIT CONDUCTOR IS REQUIRED WITHIN SIGHT FROM THE EQUIPMENT LOCATION PER CEC SECTION 440.11

E12 PER CEC 2022 150.0(N).1.A.: THE DESIGNATED SPACE IS WITHIN 3 FEET FROM THE WATER HEATER AND IS TO COMPLY WITH ELECTRICAL NOTES 15&16 ON SHEET G0.2

E13 MAIN PANELBOARD LOCATION SHALL HAVE A MINIMUM BUSBAR RATING OF 225 AMPS.

E14 ALL SINGLE-FAMILY RESIDENCES THAT INCLUDE ONE OR TWO DWELLING UNITS SHALL MEET THE FOLLOWING ENERGY STORAGE SYSTEMS (ESS) READY REQUIREMENTS. ALL ELECTRICAL COMPONENTS SHALL BE INSTALLED IN ACCORDANCE WITH THE CEC. SEE SHEET G0.2, ELECTRIC READY 150.0(s) FOR REQUIREMENTS

E15 SUFFICIENT SPACE SHALL BE RESERVED TO ALLOW FUTURE INSTALLATION OF A SYSTEM ISOLATION EQUIPMENT/TRANSFER SWITCH WITHIN 3FT OF THE MAIN PANELBOARD. RACEWAYS SHALL BE INSTALLED BETWEEN THE PANELBOARD & THE SYSTEM ISOLATION EQUIPMENT/TRANSFER SWITCH LOCATION TO ALLOW THE CONNECTION OF BACKUP POWER SOURCE.

E16 LIGHTS OVER TUBS AND SHOWERS ARE TO BE MARKED FOR DAMP/WET LOCATIONS WHERE SUBJECT TO SHOWER SPRAY

MECHANICAL LEGEND

MECHANICAL

T1 BATHROOM EXHAUST FAN: MINIMUM 50 CFM TO BE DUCTED TO THE EXTERIOR AND SHALL PROVIDE FIVE AIR CHANGES PER HOUR. CFM AND NOISE RATING MAXIMUM 3 SONE FOR INTERMITTENT USE. SHALL BE ENERGY STAR RATED AND CONTROLLED BY A HUMIDISTAT CAPABLE OF AN ADJUSTMENT BETWEEN 50-80% HUMIDITY.
IQA FAN IS REQUIRED. ONE OR MORE FANS (EITHER KITCHEN OR BATHROOM) TO OPERATE CONTINUOUSLY AT REQUIRED CFM PER HERS NOTES ON T1.1(OR GREATER) TO PROVIDE INDOOR AIR QUALITY. AT THE IAQ FAN SWITCH. A LABEL CLEARLY DISPLAYING THE FOLLOWING OR EQUIVALENT TEXT IS REQUIRED: "THIS SWITCH CONTROLS THE INDOOR AIR QUALITY VENTILATION FOR THE HOME. LEAVE IT ON UNLESS THE OUTDOOR AIR QUALITY IS VERY POOR.
DUCT SYSTEMS ARE SIZED, DESIGNED AND EQUIPMENT IS SELECTED USING THE FOLLOWING METHODS :
1. ESTABLISH HEAT LOSS AND HEAT GAIN VALUES ACCORDING TO ANSI/ ACCA 2 MANUAL J-2011 OR EQUIVALENT.
2. SIZE DUCT SYSTEMS ACCORDING TOASHARE STANDARD 62.2 TABLE 7.1 PROVIDED ON THIS SHEET
3. SELECT HEATING AND COOLING EQUIPMENT ACCORDING TO ANSI/ ACCA 3 MANUAL S-2014 OR EQUIVALENT .

RETURN AIR GRILLE, WALL MOUNTED

SUPPLY AIR DIFFUSER, WALL MOUNTED

T THERMOSTAT

HOSE BIB

ELECTRICAL LEGEND

FIRE DETECTION

SD SMOKE DETECTORS PER SECTION R314 DETECTORS SHALL BE PERMANENTLY WIRED WITH BATTERY BACKUP. SOUND AN ALARM AUDIBLE IN ALL SLEEPING AREAS. ALARM DEVICES SHALL BE INTERCONNECTED IN SUCH A MANNER THAT THE ACTUATION OF ONE ALARM WILL ACTIVATE ALL O F THE ALARMS IN THE UNIT.
SHALL COMPLY WITH THE FOLLOWING:
- AT LEAST 3' FROM THE TIP OF THE BLADE OF A CEILING-MOUNTED FAN
- NOT LESS THAN 3' FROM THE DOOR OPENING OF A BATHROOM
- AT LEAST 20' FROM A COOKING APPLIANCE OR 10' FROM COOKING APPLIANCE WHEN THE ALARM IS AN IONIZING SMOKE ALARM PER NFPA 72 SECTION 29.8.3.4 ITEM 4
- SMOKE ALARMS TO BE IONIZATION SMOKE ALARMS WITH ALARM SILENCING SWITCH, OR PHOTOELECTRIC SMOKE ALARM.
- AT LEAST 3' FROM SUPPLY REGISTERS OF A HEATING /COOLING SYSTEM

CM CARBON MONOXIDE ALARM PERMANENTLY WIRED WITH BATTERY BACKUP PER SECTION R315. ALARMS SHALL BE INTERCONNECTED IN SUCH A MANNER THAT THE ACTUATION OF ONE ALARM WILL ACTIVATE ALL O F THE ALARMS IN THE UNIT.

ASHRAE Standard 62.2 Table 7.1

Table 7.1 Prescriptive Duct Sizing Requirements

Duct Type	Flex Duct				Smooth Duct			
Fan Rating cfm @ 0.25 in. w.g.	50	80	100	125	50	80	100	125
	Maximum Allowable Duct Length (ft)							
Diameter, (in)	Flex Duct				Smooth Duct			
3	X	X	X	X	5	X	X	X
4	P2	P	X	X	105	35	5	X
5	NL	70	35	20	NL	135	85	55
6	NL	NL	125	75	NL	NL	NL	145
7 and above	NL	NL	NL	NL	NL	NL	NL	NL

This table assumes no elbows. Deduct 15 ft of allowable duct length for each turn, elbow, or fitting.
NL = no limit on duct length of this size.
X = not allowed; any length of duct of this size with assumed turns, elbows, fittings will exceed the rated pressure drop.

POWER/DATA

TAMPER RESISTANT RECEPTACLE WALL MOUNTED, 110 V DUPLEX U.O.N.
GFI = WATER PROOF GFCI
CT = COOKTOP/ GRILL 240 V
O = OVEN 240 V
MW = MICROWAVE 110 V
GD = GARBAGE DISPOSAL 110 V
R = RANGE 220V
C = COUNTER HEIGHT 6" ABV COUNTER
IDU = INDOOR UNIT POWER 84" AFF
W/D = WASHER/DRYER 30AMP/ 240AMP
PHONE / DATA / MEDIA
CEILING, WATERPROOF OUTLET
FLOOR MOUNTED DUPLEX RECEPTACLE, VERIFY LOCATION IN FIELD.
SPECIAL PURPOSE CONNECTION (VOLTAGE SHALL MATCH APPLIANCE REQ.)
SUB PANEL

SWITCHING

$ SWITCH, MOUNT AT 43" AFF
$3 THREE-WAY SWITCH
$4 FOUR-WAY SWITCH
$D DIMMER SWITCH
$OC MOUNT 6" ABV COUNTER
$VS OCCUPANCY/VACANCY SENSOR

MISC.

CEILING FAN/LIGHT COMBO

CIRCUIT WIRING

DOOR BELL BUTTON

LIGHTING

RD CEILING, RECESSED, DIRECTIONAL, ZERO CLEARANCE IC RATED LED BULB

RZC CEILING, RECESSED, ZERO CLEARANCE IC RATED LED BULB

RWR CEILING, RECESSED, ZERO CLEARANCE IC RATED, WATER RESISTANT, LED BULB

RVS CEILING, RECESSED, LED BULB WITH OCCUPANT OR VACANCY SENSOR

WALL MOUNTED LIGHT

J JUNCTION BOX FLUSH CEILING MOUNTED

UC UNDER COUNTER LIGHTING

LV LOW VOLTAGE, LANDSCAPE LIGHT

FLUORESCENT FIXTURE (USE SHALLOW TYPE WHEN UNDER COUNTER)

BATHROOM EXHAUST FAN REQUIREMENTS: PER CGBC 4.506.1-
EACH BATHROOM SHALL BE MECHANICALLY VENTILATED AND SHALL COMPLY WITH THE FOLLOWING: 1. FANS SHALL BE ENERGY STAR COMPLIANT AND BE DUCTED TO TERMINATE OUTSIDE THE BUILDING. 2. UNLESS FUNCTIONING AS A COMPONENT OF A WHOLE HOUSE VENTILATION SYSTEM, FANS MUST BE CONTROLLED BY A HUMIDITY CONTROL. A. HUMIDITY CONTROLS SHALL BE CAPABLE OF ADJUSTMENT BETWEEN A RELATIVE HUMIDITY RANGE OF <= 50 % TO A MAXIMUM OF 80 %. A HUMIDITY CONTROL MAY UTILIZE MANUAL OR AUTOMATIC MEANS OF ADJUSTMENT. B. A HUMIDITY CONTROL MAY BE A SEPARATE COMPONENT TO EXHAUST FAN AND IS NOT REQUIRED TO BE INTEGRALI(E. BUILT IN)

RESIDENTIAL ENERGY LIGHTING REQUIREMENTS:ES 150.0(K)
*IN THE KITCHEN, AT LEAST ONE-HALF OF THE WATTAGE RATING OF THE FIXTURES MUST BE HIGH EFFICACY.
*BATHROOMS, GARAGES, LAUNDRY ROOMS, UTILITY ROOMS AND WALK-IN CLOSETS, AT LEAST ONE INSTALLED LUMINAIRE SHALL BE CONTROLLED BY AN OCCUPANCY OR VACANCY SENSOR PROVIDING AUTOMATIC-OFF FUNCTIONALITY.
*ALL THROUGHOUT THE RESIDENCE, INCLUDING THE GARAGE AND EXTERIOR, SHALL BE HIGH EFFICIENCY.

DESIGN PATH STUDIO
architecture + engineering + planning
DESIGNPATHSTUDIO.COM

BY USING THESE PERMIT READY CONSTRUCTION DOCUMENTS, THE RECIPIENT ACKNOWLEDGES, ACCEPTS AND VOLUNTARILY AFFIRMS THE FOLLOWING CONDITIONS:
1. THE USE OF THIS INFORMATION IS RESTRICTED TO THE ORIGINAL PROJECT FOR WHICH IT WAS PREPARED FOR THE PERMIT READY ACCESSORY DWELLING UNIT (ADU) PROGRAM FOR THE CITY OF PERRIS ONLY. THIS IS A LIMITED SET OF STANDARDIZED ADU PLANS AND SPECIFICATIONS APPROVED BY THE CITY OF PERRIS BUILDING DEPARTMENT. BUILDING CODES DO CHANGE OVER TIME AND RECIPIENT SHALL ENSURE FULL COMPLIANCE UNDER ALL CODES THEN IN EFFECT AT THE TIME OF THE SUBJECT PERMIT. THIS DOES NOT ELIMINATE OR REDUCE THE RECIPIENT'S RESPONSIBILITY TO VERIFY ANY AND ALL INFORMATION RELEVANT TO THE RECIPIENT'S WORK AND RESPONSIBILITY ON THIS PROJECT. DESIGN PATH STUDIO SHALL NOT BE RESPONSIBLE FOR TRANSLATION ERRORS. DO NOT USE THESE CONSTRUCTION DOCUMENTS IF THE PERMIT HAS EXPIRED OR IS REVOKED AT ALL.
2. THE RECIPIENT RECOGNIZES AND ACKNOWLEDGES THAT THE USE OF THIS INFORMATION WILL BE AT THEIR SOLE RISK AND WITHOUT ANY LIABILITY OR LEGAL EXPOSURE TO DESIGN PATH STUDIO. NO WARRANTIES OF ANY NATURE, WHETHER EXPRESS OR IMPLIED, SHALL ATTACH TO THESE DOCUMENTS AND THE INFORMATION CONTAINED THEREON. ANY USE, REUSE, OR ALTERATION OF THESE DOCUMENTS BY THE RECIPIENT OR BY OTHERS WILL BE AT THE RECIPIENT'S RISK AND FULL LEGAL RESPONSIBILITY. FURTHERMORE, THE RECIPIENT WILL, TO THE FULLEST EXTENT PERMITTED BY LAW, DEFEND, INDEMNIFY AND HOLD DESIGN PATH STUDIO AND ITS ARCHITECTS HARMLESS FROM ANY AND ALL CLAIMS, SUITS, LIABILITY, DEMANDS, JUDGMENTS, OR COSTS ARISING OUT OF OR RESULTING THEREFROM ANY USE OF THESE CONSTRUCTION DOCUMENTS FOR OR ON ACCOUNT OF ANY INJURY, DEATH, DAMAGE OR LOSS TO PERSONS OR PROPERTY, DIRECT OR CONSEQUENTIAL DAMAGES IN ANY AMOUNT. THIS INDEMNITY DOES NOT APPLY TO THE SOLE NEGLIGENCE OR WILLFUL MISCONDUCT OF DESIGN PATH STUDIO OR ITS ARCHITECTS.
3. THE DESIGNS REPRESENTED BY THESE PLANS ARE COPYRIGHTED AND ARE SUBJECT TO COPYRIGHT PROTECTION.
4. IF THE RECIPIENT DOES NOT AGREE WITH THE ABOVE CONDITIONS, DO NOT PROCEED WITH CONSTRUCTION OF AN ADU OR OTHER IMPROVEMENT UNDER THESE PLANS AT ALL.

project
City of Perris
Pre-Approved
ADU Program

revisions
1

description
Mechanical/
Plumbing
Plans

date	4 April 2025
project no.	PERRIS PRADU
drawn by	DESIGN PATH STUDIO
sheet no.	A2.2

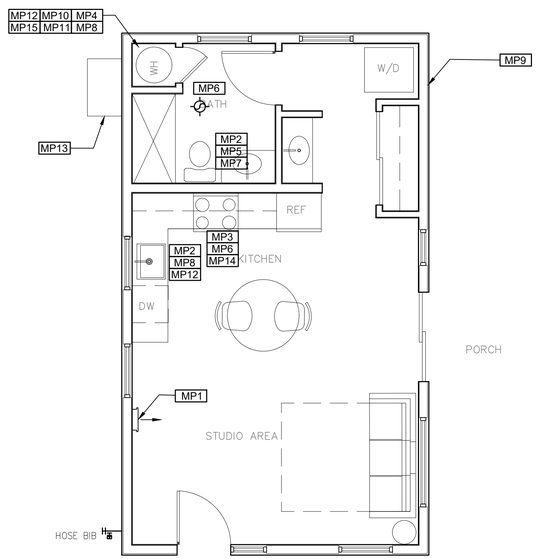

MECHANICAL / PLUMBING PLAN

1/4"=1'-0" REVERSE

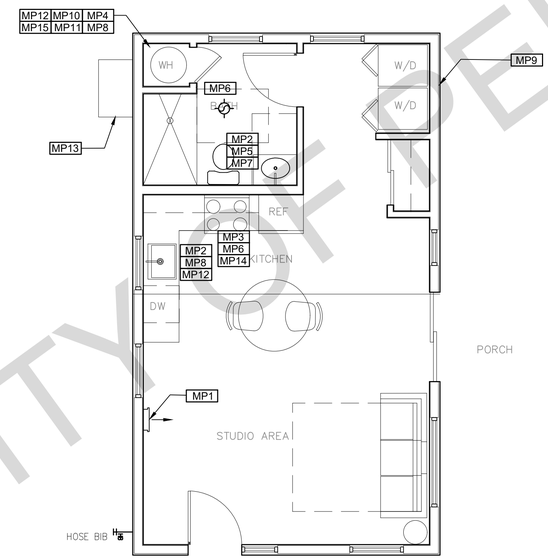

MANEUVERING OPTION

1/4"=1'-0" REVERSE

MECHANICAL / PLUMBING KEYNOTES

MP1 INDOOR UNIT MINI SPLIT SYSTEM.

MP2 WATER CONSERVING FIXTURES: NEW WATER CLOSETS SHALL USE NO MORE THAN 1.28 GAL. OF WATER PER FLUSH, LAVATORIES LIMITED TO 1.2 GPM, KITCHEN FAUCETS NOT TO EXCEED 1.8 GPM AT 60 PSI THEY CAN INCREASE THE FLOW MOMENTARILY BUT CANT EXCEED 2.2GALLONS PER MIN. AT 60 PSI AND MUST DEFAULT TO A MAX. FLOW RATE OF 1.8GALLONS PER MIN AT 60 PSI., AND SHOWERS NOT EXCEED 1.8 GPM. AT 80 PSI AND ALL SHALL BE CERTIFIED TO MEET THE PERFORMANCE CRITERIA OF THE EPA WATERSENCE SPECIFICATIONS FOR SHOWERHEADS. CPC SECTIONS 407, 408, 411, 412 AND SECTION 301.1.1 CALGREEN CODE AND CIVIL CODE 1101.3(c)

MP3 EXHAUST HOOD ABOVE/ TO BE SMOOTH METALLIC INTERIOR SURFACE (CMC 504.3)

MP4 NEW WATER HEATER PER T24 REQUIREMENTS - TO HAVE CONDENSATE DRAIN INSTALLED NO HIGHER THAN 2' ABOVE THE BASE OF THE HEATER THAT ALSO ALLOWS GRAVITY DRAINAGE PLEASE SEE TABLE 501.1(2) ON THIS SHEET FOR FIRST HOUR RATING IN GALLONS.

MP5 CONTROL VALVES IN SHOWERS, BATHTUBS, & BIDETS MUST BE PRESSURE BALANCED OR THERMOSTATIC MIX VALVES

MP6 MINIMUM OF 3 FT CLEARANCE TO ANY OPENING INTO BUILDING FOR EXHAUST FAN TERMINATIONS

MP7 CLEARANCE FOR WATER CLOSET TO BE A MIN. OF 24" IN FRONT, AND 15" FROM ITS CENTER TO ANY SIDE WALL OR OBSTRUCTION. (CPC 402.5)

MP8 THE 1/2" SIZE HOT WATER PIPE TO THE KITCHEN SINK AND THE COLD WATER PIPE WITHIN 5' OF WATER HEATER BOTH REQUIRE 1" INSULATION

MP9 DRYER EXHAUST OUTLET FROM DRYER TO EXTERIOR MAX LENGTH 14', WITH MAXIMUM OF TWO 90° ELBOWS.EXHAUST VENT MUST TERMINATE A MIN. OF 3' FROM ANY OPENING. MIN. TYPE 1 CLOTHES DRYER EXHAUST DUCTS SHALL BE OF RIGID METAL & SHALL HAVE SMOOTH INTERIOR SURFACES. THE DIAMETER SHALL BE NOT LESS THAN 4 INCHES NOMINAL (100 MM), & THE THICKNESS SHALL BE NOT LESS THAN 0.016 OF AN INCH (0.406 MM). EXHAUST DUCTS & DRYER VENTS SHALL BE EQUIPPED WITH BACK DRAFT DAMPERS

MP10 NEW WATER HEATER WITH T&P RELIEF VALVE AND DISCHARGE PIPE AT EXTERIOR, PROVIDE COMBUSTION AIR AND CLEARANCES PER MANUFACTURER REQUIREMENTS.

MP11 NEW WATER HEATERS SHALL HAVE ISOLATION VALVES ON BOTH THE COLD AND THE HOT WATER PIPING LEAVING THE WATER HEATER COMPLETE WITH HOSE BIBS OR OTHER FITTINGS ON EACH VALVES FOR FLUSHING THE WATER HEATER WHEN THE VALVES ARE CLOSED

MP12 ALL DOMESTIC HOT WATER PIPING TO HAVE THE FOLLOWING MINIMUM INSULATION INSTALLED:
- ¾" PIPE (¾" INSULATION);
- ¾" PIPE (1" INSULATION);
- 1" TO 1-1/2" PIPE (1-1/2" INSULATION)

MP13 OUTDOOR CONDENSING UNIT TO BE PIPED TO INDOOR HVAC UNIT

MP14 KITCHEN HOOD CFM TO BE 160 CFM MINIMUM FOR ELECTRIC RANGE, AND 280 CFM MINIMUM FOR GAS RANGE PER CENERGYC TABLE 150.0-G

MP15 WATER HEATERS WITH STORAGE TANKS SHALL BE ANCHORED OR STRAPPED TO RESIST HORIZONTAL DISPLACE DUE TO EARTHQUAKE MOTION. STRAPPING SHALL BE AT POINTS WITH THE UPPER ONE-THIRD AND LOWER ONE-THIRD OF ITS VERTICAL DIMENSIONS. AT THE LOWER POINT, A MIN DISTANCE OF 4 IN SHALL BE MAINTAINED ABOVE THE CONTROLS WITH THE STRAPPING.

ELECTRICAL KEYNOTES

E1 DEDICATED 30 AMP/ 240V POWER FOR ELECTRIC DRYER OR OVEN. VERIFY REQUIREMENTS WITH APPLIANCE SPECIFICATIONS - ELECTRIC COOKTOP READY REQUIREMENTS ARE TO BE IMPLEMENTED, SEE SHEET G0.2, ELECTRIC READY 150.0(u) FOR REQUIREMENTS

E2 OUTLET FOR NEW ELECTRIC HYBRID HEAT PUMP WATER HEATER WITHIN 3' OF WATER HEATER. SEE ELECTRICAL NOTE #16 ON G0.2 FOR MORE INFORMATION

E3 SUBPANEL LOCATION. ALTERNATE LOCATION TO BE DETERMINED BY OWNER

E4 OUTLET AT COUNTER HEIGHT - SHALL COMPLY WITH CEC ARTICLE 210.52(C): IN KITCHENS A RECEPTACLE OUTLET SHALL BE INSTALLED AT EACH COUNTER SPACE 12" OR WIDER. SHALL BE INSTALLED SO THAT NO POINT ALONG THE WALL IS MORE THAN 24"; ISLAND IN PENINSULAR COUNTERTOPS 12" X 24" LONG (OR GREATER) SHALL HAVE AT LEAST ONCE RECEPTACLE

E5 OUTDOOR LIGHTING FIXTURES ARE REQUIRED TO BE HIGH EFFICACY OR CONTROLLED BY A COMBINATION PHOTOCONTROL / MOTION SENSOR.

E6 OUTLET DEDICATED FOR INDOOR HVAC UNIT

E7 WEATHER RESISTANT TYPE RECEPTACLES GFCI PROTECTED

E8 OVER-CURRENT FEEDER TO EXTEND TO EXISTING PANEL- ALUMINUM CONDUCTOR BURIED UNDER GROUND WITH AWG ALLOWABLE VOLTAGE DROP PER CEC 250.4

E9 SEPARATE GROUND ELECTRODE SYSTEM PER CEC 250.4

E10 OUTDOOR CONDENSING UNIT RECEPTACLE OUTLET SHALL BE INSTALLED AT AN ACCESSIBLE LOCATION FOR THE SERVICING OF THE HEATING AND COOLING EQUIPMENT AND SHALL BE LOCATED ON THE SAME LEVEL AND WITHIN 25 FEET OF THE EQUIPMENT. THIS RECEPTACLE SHALL BE GFCI-WP PROTECTED.

E11 A DISCONNECTING MEANS CAPABLE OF DISCONNECTING AIR-CONDITIONING AND REFRIGERATING EQUIPMENT, INCLUDING MOTOR-COMPRESSORS AND CONTROLLERS FROM THE CIRCUIT CONDUCTOR IS REQUIRED WITHIN SIGHT FROM THE EQUIPMENT LOCATION PER CEC SECTION 440.11

E12 PER CEC 2022 150.0(N).1.A.: THE DESIGNATED SPACE IS WITHIN 3 FEET FROM THE WATER HEATER AND IS TO COMPLY WITH ELECTRICAL NOTES 15&16 ON SHEET G0.2

E13 MAIN PANELBOARD LOCATION SHALL HAVE A MINIMUM BUSBAR RATING OF 225 AMPS.

E14 ALL SINGLE-FAMILY RESIDENCES THAT INCLUDE ONE OR TWO DWELLING UNITS SHALL MEET THE FOLLOWING ENERGY STORAGE SYSTEMS (ESS) READY REQUIREMENTS. ALL ELECTRICAL COMPONENTS SHALL BE INSTALLED IN ACCORDANCE WITH THE CEC. SEE SHEET G0.2, ELECTRIC READY 150.0(s) FOR REQUIREMENTS

E15 SUFFICIENT SPACE SHALL BE RESERVED TO ALLOW FUTURE INSTALLATION OF A SYSTEM ISOLATION EQUIPMENT/TRANSFER SWITCH WITHIN 3FT OF THE MAIN PANELBOARD. RACEWAYS SHALL BE INSTALLED BETWEEN THE PANELBOARD & THE SYSTEM ISOLATION EQUIPMENT/TRANSFER SWITCH LOCATION TO ALLOW THE CONNECTION OF BACKUP POWER SOURCE.

E16 LIGHTS OVER TUBS AND SHOWERS ARE TO BE MARKED FOR DAMP/WET LOCATIONS WHERE SUBJECT TO SHOWER SPRAY

MECHANICAL LEGEND

MECHANICAL

BATHROOM EXHAUST FAN: MINIMUM 50 CFM TO BE DUCTED TO THE EXTERIOR AND SHALL PROVIDE FIVE AIR CHANGES PER HOUR. CFM AND NOISE RATING MAXIMUM 3 SONE FOR INTERMITTENT USE. SHALL BE ENERGY STAR RATED AND CONTROLLED BY A HUMIDISTAT CAPABLE OF AN ADJUSTMENT BETWEEN 50-80% HUMIDITY.
IQA FAN IS REQUIRED. ONE OR MORE FANS (EITHER KITCHEN OR BATHROOM) TO OPERATE CONTINUOUSLY AT REQUIRED CFM PER HERS NOTES ON T1.1(OR GREATER) TO PROVIDE INDOOR AIR QUALITY. AT THE IAQ FAN SWITCH. A LABEL CLEARLY DISPLAYING THE FOLLOWING OR EQUIVALENT TEXT IS REQUIRED: "THIS SWITCH CONTROLS THE INDOOR AIR QUALITY VENTILATION FOR THE HOME. LEAVE IT ON UNLESS THE OUTDOOR AIR QUALITY IS VERY POOR.

DUCT SYSTEMS ARE SIZED, DESIGNED AND EQUIPMENT IS SELECTED USING THE FOLLOWING METHODS :
1. ESTABLISH HEAT LOSS AND HEAT GAIN VALUES ACCORDING TO ANSI/ ACCA 2 MANUAL J-2011 OR EQUIVALENT.
2. SIZE DUCT SYSTEMS ACCORDING TOASHARE STANDARD 62.2 TABLE 7.1 PROVIDED ON THIS SHEET
3. SELECT HEATING AND COOLING EQUIPMENT ACCORDING TO ANSI/ ACCA 3 MANUAL S-2014 OR EQUIVALENT .

RETURN AIR GRILLE, WALL MOUNTED

SUPPLY AIR DIFFUSER, WALL MOUNTED

THERMOSTAT — HOSE BIB

ELECTRICAL LEGEND

FIRE DETECTION

SD SMOKE DETECTORS PER SECTION R314 DETECTORS SHALL BE PERMANENTLY WIRED WITH BATTERY BACKUP. SOUND AN ALARM AUDIBLE IN ALL SLEEPING AREAS. ALARM DEVICES SHALL BE INTERCONNECTED IN SUCH A MANNER THAT THE ACTUATION OF ONE ALARM WILL ACTIVATE ALL O F THE ALARMS IN THE UNIT.
SHALL COMPLY WITH THE FOLLOWING:
- AT LEAST 3' FROM THE TIP OF THE BLADE OF A CEILING-MOUNTED FAN
- NOT LESS THAN 3' FROM THE DOOR OPENING OF A BATHROOM
- AT LEAST 20' FROM A COOKING APPLIANCE OR 10' FROM COOKING APPLIANCE WHEN THE ALARM IS AN IONIZING SMOKE ALARM PER NFPA 72 SECTION 29.8.3.4 ITEM 4
- SMOKE ALARMS TO BE IONIZATION SMOKE ALARMS WITH ALARM SILENCING SWITCH, OR PHOTOELECTRIC SMOKE ALARM.
- AT LEAST 3' FROM SUPPLY REGISTERS OF A HEATING /COOLING SYSTEM

CM CARBON MONOXIDE ALARM PERMANENTLY WIRED WITH BATTERY BACKUP PER SECTION R315. ALARMS SHALL BE INTERCONNECTED IN SUCH A MANNER THAT THE ACTUATION OF ONE ALARM WILL ACTIVATE ALL O F THE ALARMS IN THE UNIT.

ASHRAE Standard 62.2 Table 7.1

Table 7.1 Prescriptive Duct Sizing Requirements

Duct Type	Flex Duct				Smooth Duct			
Fan Rating cfm @ 0.25 in. w.g.	50	80	100	125	50	80	100	125
	Maximum Allowable Duct Length (ft)							
Diameter, (in)	Flex Duct				Smooth Duct			
3	X	X	X	X	5	X	X	X
4	P2	P	X	X	105	P3	5	X
5	NL	70	35	20	NL	135	85	55
6	NL	NL	125	75	NL	NL	NL	145
7 and above	NL	NL	NL	NL	NL	NL	NL	NL

This table assumes no elbows. Deduct 15 ft of allowable duct length for each turn, elbow, or fitting.
NL = no limit on duct length of this size.
X = not allowed; any length of duct of this size with assumed turns, elbows, fittings will exceed the rated pressure drop.

POWER/DATA

TAMPER RESISTANT RECEPTACLE WALL MOUNTED, 110 V DUPLEX U.O.N.

GFI = WATER PROOF GFCI
CT = COOKTOP/ GRILL 240 V
O = OVEN 240 V
MW = MICROWAVE 110 V
GD = GARBAGE DISPOSAL 110 V
R = RANGE 220V
C = COUNTER HEIGHT 6" ABV COUNTER
IDU = INDOOR UNIT POWER 84" AFF
W/D = WASHER/DRYER 30AMP/ 240AMP

PHONE / DATA / MEDIA

CEILING, WATERPROOF OUTLET

FLOOR MOUNTED DUPLEX RECEPTACLE, VERIFY LOCATION IN FIELD.

SPECIAL PURPOSE CONNECTION (VOLTAGE SHALL MATCH APPLIANCE REQ.)

SUB PANEL

SWITCHING

$ SWITCH, MOUNT AT 43" AFF
$3 THREE-WAY SWITCH
$4 FOUR-WAY SWITCH
$D DIMMER SWITCH
$OC MOUNT 6" ABV COUNTER
$VS OCCUPANCY/VACANCY SENSOR

MISC.

CEILING FAN/LIGHT COMBO

CIRCUIT WIRING

DOOR BELL BUTTON

LIGHTING

R_D CEILING, RECESSED, DIRECTIONAL, ZERO CLEARANCE IC RATED LED BULB

R_ZC CEILING, RECESSED, ZERO CLEARANCE IC RATED LED BULB

R_WR CEILING, RECESSED, ZERO CLEARANCE IC RATED, WATER RESISTANT, LED BULB

R_VS CEILING, RECESSED, LED BULB WITH OCCUPANT OR VACANCY SENSOR

WALL MOUNTED LIGHT

J JUNCTION BOX FLUSH CEILING MOUNTED

UC UNDER COUNTER LIGHTING

LV LOW VOLTAGE, LANDSCAPE LIGHT

FLUORESCENT FIXTURE (USE SHALLOW TYPE WHEN UNDER COUNTER)

BATHROOM EXHAUST FAN REQUIREMENTS: PER CGBC 4.506.1-

EACH BATHROOM SHALL BE MECHANICALLY VENTILATED AND SHALL COMPLY WITH THE FOLLOWING: 1. FANS SHALL BE ENERGY STAR COMPLIANT AND BE DUCTED TO TERMINATE OUTSIDE THE BUILDING. 2. UNLESS FUNCTIONING AS A COMPONENT OF A WHOLE HOUSE VENTILATION SYSTEM, FANS MUST BE CONTROLLED BY A HUMIDITY CONTROL. A. HUMIDITY CONTROLS SHALL BE CAPABLE OF ADJUSTMENT BETWEEN A RELATIVE HUMIDITY RANGE OF <= 50 % TO A MAXIMUM OF 80 %. A HUMIDITY CONTROL MAY UTILIZE MANUAL OR AUTOMATIC MEANS OF ADJUSTMENT. B. A HUMIDITY CONTROL MAY BE A SEPARATE COMPONENT TO EXHAUST FAN AND IS NOT REQUIRED TO BE INTEGRALI(E. BUILT IN)

RESIDENTIAL ENERGY LIGHTING REQUIREMENTS:ES 150.0(K)

*IN THE KITCHEN, AT LEAST ONE-HALF OF THE WATTAGE RATING OF THE FIXTURES MUST BE HIGH EFFICACY.
*BATHROOMS, GARAGES, LAUNDRY ROOMS, UTILITY ROOMS AND WALK-IN CLOSETS, AT LEAST ONE INSTALLED LUMINAIRE SHALL BE CONTROLLED BY AN OCCUPANCY OR VACANCY SENSOR PROVIDING AUTOMATIC-OFF FUNCTIONALITY.
*ALL THROUGHOUT THE RESIDENCE, INCLUDING THE GARAGE AND EXTERIOR, SHALL BE HIGH EFFICIENCY.

FOR USE IN THE CITY OF PERRIS

DESIGN PATH STUDIO
architecture + engineering + planning
DESIGNPATHSTUDIO.COM

BY USING THESE PERMIT READY CONSTRUCTION DOCUMENTS, THE RECIPIENT ACKNOWLEDGES, ACCEPTS AND VOLUNTARILY AFFIRMS THE FOLLOWING CONDITIONS:
1. THE USE OF THIS INFORMATION IS RESTRICTED TO THE ORIGINAL PROJECT FOR WHICH IT WAS PREPARED FOR THE PERMIT READY ACCESSORY DWELLING UNIT (ADU) PROGRAM FOR THE CITY OF PERRIS ONLY. THIS IS A LIMITED SET OF STANDARDIZED ADU PLANS AND SPECIFICATIONS APPROVED BY THE CITY OF PERRIS BUILDING DEPARTMENT. BUILDING CODES DO CHANGE OVER TIME AND RECIPIENT SHALL ENSURE FULL COMPLIANCE UNDER ALL CODES THEN IN EFFECT AT THE TIME OF THE SUBJECT PERMIT. THIS DOES NOT ELIMINATE OR REDUCE THE RECIPIENT'S RESPONSIBILITY TO VERIFY ANY AND ALL INFORMATION RELEVANT TO THE RECIPIENT'S WORK AND RESPONSIBILITY ON THIS PROJECT. DESIGN PATH STUDIO SHALL NOT BE RESPONSIBLE FOR TRANSLATION ERRORS. DO NOT USE THESE CONSTRUCTION DOCUMENTS IF THE PERMIT HAS EXPIRED OR IS REVOKED AT ALL.
2. THE RECIPIENT RECOGNIZES AND ACKNOWLEDGES THAT THE USE OF THIS INFORMATION WILL BE AT THEIR SOLE RISK AND WITHOUT ANY LIABILITY OR LEGAL EXPOSURE TO DESIGN PATH STUDIO. NO WARRANTIES OF ANY NATURE, WHETHER EXPRESS OR IMPLIED, SHALL ATTACH TO THESE DOCUMENTS AND THE INFORMATION CONTAINED THEREON. ANY USE, REUSE, OR ALTERATION OF THESE DOCUMENTS BY THE RECIPIENT OR BY OTHERS WILL BE AT THE RECIPIENT'S RISK AND FULL LEGAL RESPONSIBILITY. FURTHERMORE, THE RECIPIENT WILL, TO THE FULLEST EXTENT PERMITTED BY LAW, DEFEND, INDEMNIFY AND HOLD DESIGN PATH STUDIO AND ITS ARCHITECTS HARMLESS FROM ANY AND ALL CLAIMS, SUITS, LIABILITY, DEMANDS, JUDGMENTS, OR COSTS ARISING OUT OF OR RESULTING THERE FROM ANY USE OF THESE CONSTRUCTION DOCUMENTS FOR OR ON ACCOUNT OF ANY INJURY, DEATH, DAMAGE OR LOSS TO PERSONS OR PROPERTY, DIRECT OR CONSEQUENTIAL DAMAGES IN ANY AMOUNT. THIS INDEMNITY DOES NOT APPLY TO THE SOLE NEGLIGENCE OR WILLFUL MISCONDUCT OF DESIGN PATH STUDIO OR ITS ARCHITECTS.
3. THE DESIGNS REPRESENTED BY THESE PLANS ARE COPYRIGHTED AND ARE SUBJECT TO COPYRIGHT PROTECTION.
4. IF THE RECIPIENT DOES NOT AGREE WITH THE ABOVE CONDITIONS, DO NOT PROCEED WITH CONSTRUCTION OF AN ADU OR OTHER IMPROVEMENT UNDER THESE PLANS AT ALL.

project
City of Perris
Pre-Approved
ADU Program

revisions
1

description
Mechanical/
Plumbing
Plans
Reverse

date 4 April 2025

project no. PERRIS PRADU

drawn by DESIGN PATH STUDIO

sheet no. A2.2R

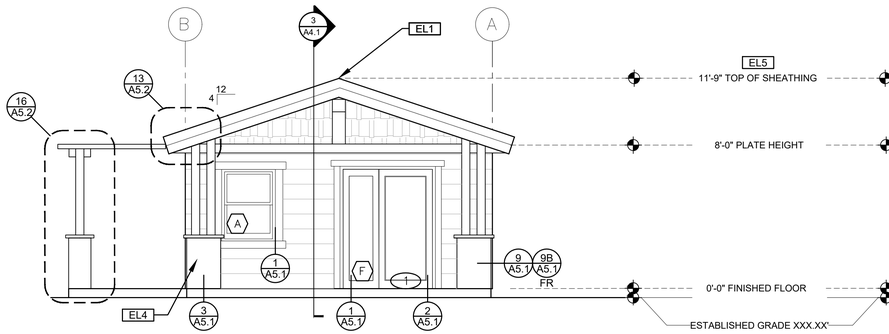

ELEVATION - A

1/4"=1'-0" CRAFTSMAN

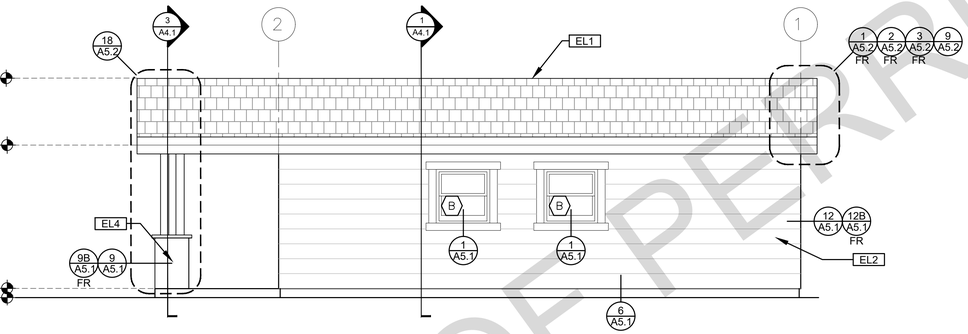

ELEVATION - B

1/4"=1'-0" CRAFTSMAN

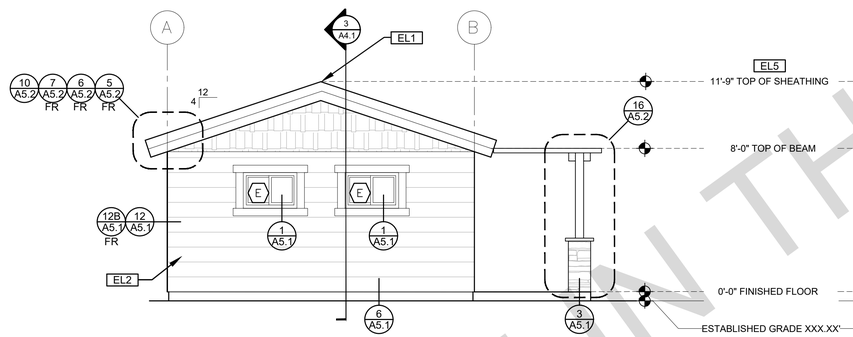

ELEVATION - C

1/4"=1'-0" CRAFTSMAN

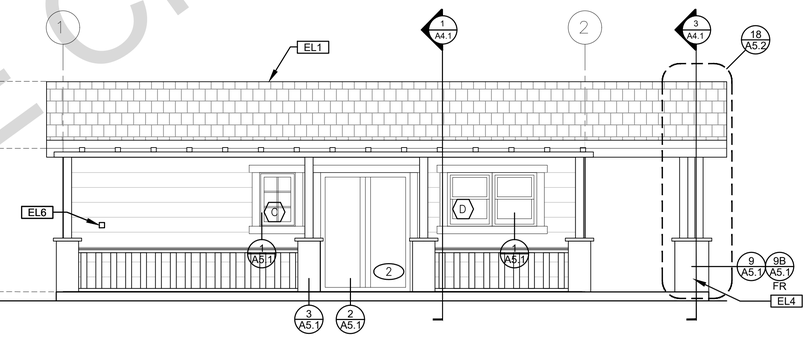

ELEVATION - D

1/4"=1'-0" CRAFTSMAN

ELEVATION KEYNOTES

EL1	MINIMUM CLASS A ROOF ASSEMBLY - SEE SHEET T1.1 FOR MANUFACTURER SPECIFICATIONS
EL2	SIDING - SEE SHEET T1.1 FOR MANUFACTURER SPECIFICATIONS
EL3	STUCCO - SEE SHEET T1.1 FOR MANUFACTURER SPECIFICATIONS
EL4	STONE VENEER - SEE SHEET T1.1 FOR MANUFACTURER SPECIFICATIONS
EL5	HEIGHT IS MEASURED AT THE BUILDING LINE, FROM THE LOWER OF EXISTING AND PROPOSED GRADES
EL6	DRYER VENT TERMINATION (MINIMUM OF 3 FT FROM ANY OPENING)

ELEVATION GENERAL NOTES

1. ALL DIMENSIONS TO FINISH FACE, U.N.O.

2. ALL DOORS SHOULD BE 3 1/2" FROM NEAREST INTERSECTING WALL AT HINGED SIDE, U.N.O.

3. WRITTEN DIMENSIONS TO PREVAIL OVER SCALING OF DRAWINGS. SUBCONTRACTOR TO VERIFY ALL DIM. PRIOR TO CONSTRUCTION AND IMMEDIATELY NOTIFY ARCHITECT OF ANY DISCREPANCIES.

4. REFER TO FRAMING PLANS,FLOOR PLANS, AND SECTIONS FOR CLARIFICATION AND DIMENSIONS

5. SEE SCHEDULE FOR DOOR AND WINDOW INFORMATION AND HEIGHTS

6. LATH & PLASTER
A. MATERIALS FOR PLASTER IS TO BE THE STANDARD PRODUCTS OF RECOGNIZED MANUFACTURES, AND SHALL BE AS MANUFACTURED BY US GYPSUM CO. AND APPROVED BY THE LATH AND PLASTER INSTIGAT OR APPROVED EQUAL.
B. ALL PLASTER CORNER BEADS, CASING BEADS, CONTROL JOINTS,EXPANSION SCREEDS AND ACCESSORIES ARE TO BE GALVANIZED.PROVIDE CASING BEADS AT ALL JOINTS OF STUCCO TO DISSIMILAR SURFACES UNLESS OTHERWISE NOTED
C. WHERE INDICATED ON THE DRAWINGS, PORTLAND CEMENT PLASTER IS TO BE HAND APPLIED (3) THREE COAT WORK, 7/8" THICK ON EXTERIOR SURFACES. THE COATS ARE TO CONSIST OF A SCRATCH (3/8" AND A TWO COAT FINISH (1/8" MIN.) COAT PROPORTIONED AND MIXED ADS RECOMMENDED BY THE CALIFORNIA LATHING AND PLASTERING CONTRACTORS ASSOCIATION.

7. FRAMING ELEVATIONS, INCLUDING FLOOR PLATES AND FLOOR LEVEL ELEVATIONS ARE MEASURED FROM BUILDING FINISH FLOOR, U.N.O.

8. SEE ROOF PLAN FOR APPROXIMATE DOWNSPOUT LOCATIONS, U.N.O.

10. CONTRACTOR TO VERIFY COLOR SCHEME WITH OWNER BEFORE PERFORMING THE WORK

LEGEND

SECTION CUT
ELEVATION CALLOUT
DETAIL DRAWING REF.
X-X" ELEVATION MARKER
1 KEYNOTE
X DOOR SYMBOL
1 WINDOW SYMBOL
T TEMPERED GLASS
SPRAY FIN. STUCCO
SIDING
STONE VENEER
ROOFING

FOR USE IN IN THE CITY OF PERRIS

DESIGN PATH STUDIO
architecture + engineering + planning
DESIGNPATHSTUDIO.COM

BY USING THESE PERMIT READY CONSTRUCTION DOCUMENTS, THE RECIPIENT ACKNOWLEDGES, ACCEPTS AND VOLUNTARILY AFFIRMS THE FOLLOWING CONDITIONS:
1. THE USE OF THIS INFORMATION IS RESTRICTED TO THE ORIGINAL PROJECT FOR WHICH IT WAS PREPARED FOR THE PERMIT READY ACCESSORY DWELLING UNIT (ADU) PROGRAM FOR THE CITY OF PERRIS ONLY. THIS IS A LIMITED SET OF STANDARDIZED ADU PLANS AND SPECIFICATIONS APPROVED BY THE CITY OF PERRIS BUILDING DEPARTMENT. BUILDING CODES DO CHANGE OVER TIME AND RECIPIENT SHALL ENSURE FULL COMPLIANCE UNDER ALL CODES THEN IN EFFECT AT THE TIME OF THE SUBJECT PERMIT. THIS DOES NOT ELIMINATE OR REDUCE THE RECIPIENT'S RESPONSIBILITY TO VERIFY ANY AND ALL INFORMATION RELEVANT TO THE RECIPIENT'S WORK AND RESPONSIBILITY ON THIS PROJECT. DESIGN PATH STUDIO SHALL NOT BE RESPONSIBLE FOR TRANSLATION ERRORS. DO NOT USE THESE CONSTRUCTION DOCUMENTS IF THE PERMIT HAS EXPIRED OR IS REVOKED AT ALL.
2. THE RECIPIENT RECOGNIZES AND ACKNOWLEDGES THAT THE USE OF THIS INFORMATION WILL BE AT THEIR SOLE RISK AND WITHOUT ANY LIABILITY OR LEGAL EXPOSURE TO DESIGN PATH STUDIO. NO WARRANTIES OF ANY NATURE, WHETHER EXPRESS OR IMPLIED, SHALL ATTACH TO THESE DOCUMENTS AND THE INFORMATION CONTAINED THEREON. ANY USE, REUSE, OR ALTERATION OF THESE DOCUMENTS BY THE RECIPIENT OR BY OTHERS WILL BE AT THE RECIPIENT'S RISK AND FULL LEGAL RESPONSIBILITY. FURTHERMORE, THE RECIPIENT WILL, TO THE FULLEST EXTENT PERMITTED BY LAW, DEFEND, INDEMNIFY AND HOLD DESIGN PATH STUDIO AND ITS ARCHITECTS HARMLESS FROM ANY AND ALL CLAIMS, SUITS, LIABILITY, DEMANDS, JUDGMENTS, OR COSTS ARISING OUT OF OR RESULTING THERE FROM ANY USE OF THESE CONSTRUCTION DOCUMENTS FOR OR ON ACCOUNT OF ANY INJURY, DEATH, DAMAGE OR LOSS TO PERSONS OR PROPERTY, DIRECT OR CONSEQUENTIAL DAMAGES IN ANY AMOUNT. THIS INDEMNITY DOES NOT APPLY TO THE SOLE NEGLIGENCE OR WILLFUL MISCONDUCT OF DESIGN PATH STUDIO OR ITS ARCHITECTS.
3. THE DESIGNS REPRESENTED BY THESE PLANS ARE COPYRIGHTED AND ARE SUBJECT TO COPYRIGHT PROTECTION.
4. IF THE RECIPIENT DOES NOT AGREE WITH THE ABOVE CONDITIONS, DO NOT PROCEED WITH CONSTRUCTION OF AN ADU OR OTHER IMPROVEMENT UNDER THESE PLANS AT ALL.

project
City of Perris
Pre-Approved
ADU Program

revisions
1

description
Exterior
Elevations
Craftsman

date	4 April 2025
project no.	PERRIS PRADU
drawn by	DESIGN PATH STUDIO
sheet no.	A3.1

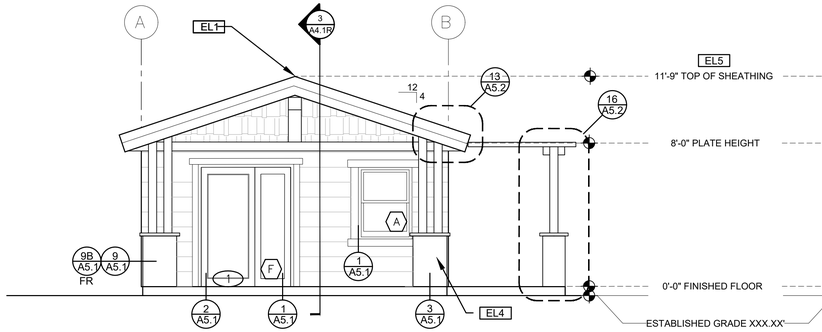

ELEVATION - A

1/4"=1'-0" CRAFTSMAN - REVERSE

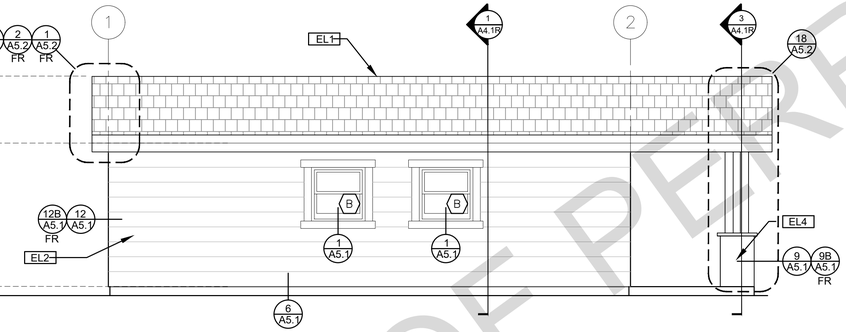

ELEVATION - B

1/4"=1'-0" CRAFTSMAN - REVERSE

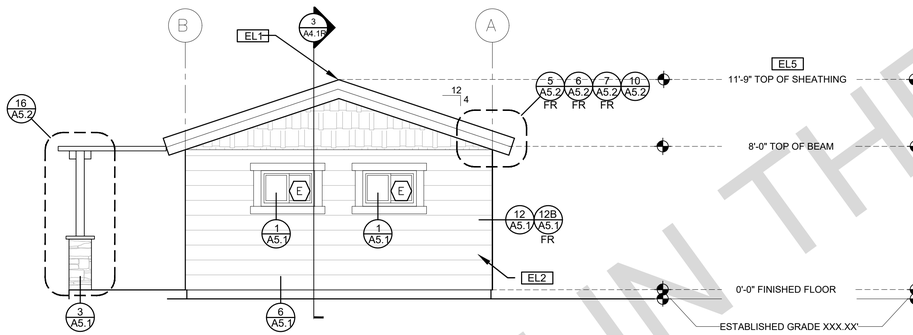

ELEVATION - C

1/4"=1'-0" CRAFTSMAN - REVERSE

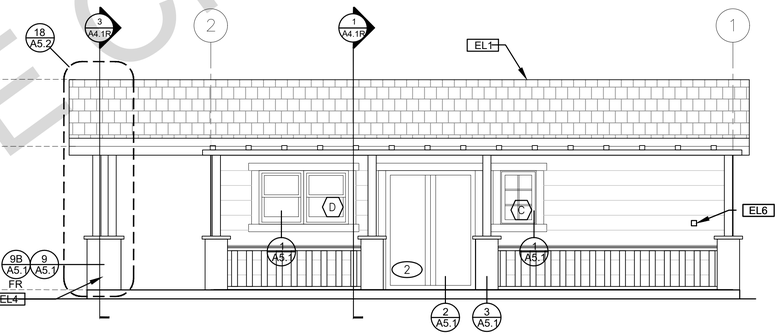

ELEVATION - D

1/4"=1'-0" CRAFTSMAN - REVERSE

ELEVATION KEYNOTES

- EL1 MINIMUM CLASS A ROOF ASSEMBLY - SEE SHEET T1.1 FOR MANUFACTURER SPECIFICATIONS
- EL2 SIDING - SEE SHEET T1.1 FOR MANUFACTURER SPECIFICATIONS
- EL3 STUCCO - SEE SHEET T1.1 FOR MANUFACTURER SPECIFICATIONS
- EL4 STONE VENEER - SEE SHEET T1.1 FOR MANUFACTURER SPECIFICATIONS
- EL5 HEIGHT IS MEASURED AT THE BUILDING LINE, FROM THE LOWER OF EXISTING AND PROPOSED GRADES
- EL6 DRYER VENT TERMINATION (MINIMUM OF 3 FT FROM ANY OPENING)

ELEVATION GENERAL NOTES

1. ALL DIMENSIONS TO FINISH FACE, U.N.O.

2. ALL DOORS SHOULD BE 3 1/2" FROM NEAREST INTERSECTING WALL AT HINGED SIDE, U.N.O.

3. WRITTEN DIMENSIONS TO PREVAIL OVER SCALING OF DRAWINGS. SUBCONTRACTOR TO VERIFY ALL DIM. PRIOR TO CONSTRUCTION AND IMMEDIATELY NOTIFY ARCHITECT OF ANY DISCREPANCIES.

4. REFER TO FRAMING PLANS,FLOOR PLANS, AND SECTIONS FOR CLARIFICATION AND DIMENSIONS

5. SEE SCHEDULE FOR DOOR AND WINDOW INFORMATION AND HEIGHTS

6. LATH & PLASTER
A. MATERIALS FOR PLASTER IS TO BE THE STANDARD PRODUCTS OF RECOGNIZED MANUFACTURES, AND SHALL BE AS MANUFACTURED BY US GYPSUM CO. AND APPROVED BY THE LATH AND PLASTER INSTIGAT OR APPROVED EQUAL.
B. ALL PLASTER CORNER BEADS, CASING BEADS, CONTROL JOINTS,EXPANSION SCREEDS AND ACCESSORIES ARE TO BE GALVANIZED.PROVIDE CASING BEADS AT ALL JOINTS OF STUCCO TO DISSIMILAR SURFACES UNLESS OTHERWISE NOTED
C. WHERE INDICATED ON THE DRAWINGS, PORTLAND CEMENT PLASTER IS TO BE HAND APPLIED (3) THREE COAT WORK, 7/8" THICK ON EXTERIOR SURFACES. THE COATS ARE TO CONSIST OF A SCRATCH (3/8" AND A TWO COAT FINISH (1/8" MIN.) COAT PROPORTIONED AND MIXED ADS RECOMMENDED BY THE CALIFORNIA LATHING AND PLASTERING CONTRACTORS ASSOCIATION.

7. FRAMING ELEVATIONS, INCLUDING FLOOR PLATES AND FLOOR LEVEL ELEVATIONS ARE MEASURED FROM BUILDING FINISH FLOOR, U.N.O.

8. SEE ROOF PLAN FOR APPROXIMATE DOWNSPOUT LOCATIONS, U.N.O.

10. CONTRACTOR TO VERIFY COLOR SCHEME WITH OWNER BEFORE PERFORMING THE WORK

LEGEND

- SECTION CUT
- ELEVATION CALLOUT
- DETAIL DRAWING REF.
- X-X" ELEVATION MARKER
- 1 KEYNOTE
- X DOOR SYMBOL
- 1 WINDOW SYMBOL
- T TEMPERED GLASS
- SPRAY FIN. STUCCO
- SIDING
- STONE VENEER
- ROOFING

FOR USE IN IN THE CITY OF PERRIS

DESIGN PATH STUDIO
architecture + engineering + planning
DESIGNPATHSTUDIO.COM

BY USING THESE PERMIT READY CONSTRUCTION DOCUMENTS, THE RECIPIENT ACKNOWLEDGES, ACCEPTS AND VOLUNTARILY AFFIRMS THE FOLLOWING CONDITIONS:
1. THE USE OF THIS INFORMATION IS RESTRICTED TO THE ORIGINAL PROJECT FOR WHICH IT WAS PREPARED FOR THE PERMIT READY ACCESSORY DWELLING UNIT (ADU) PROGRAM FOR THE CITY OF PERRIS ONLY. THIS IS A LIMITED SET OF STANDARDIZED ADU PLANS AND SPECIFICATIONS APPROVED BY THE CITY OF PERRIS BUILDING DEPARTMENT. BUILDING CODES DO CHANGE OVER TIME AND RECIPIENT SHALL ENSURE FULL COMPLIANCE UNDER ALL CODES THEN IN EFFECT AT THE TIME OF THE SUBJECT PERMIT. THIS DOES NOT ELIMINATE OR REDUCE THE RECIPIENT'S RESPONSIBILITY TO VERIFY ANY AND ALL INFORMATION RELEVANT TO THE RECIPIENT'S WORK AND RESPONSIBILITY ON THIS PROJECT. DESIGN PATH STUDIO SHALL NOT BE RESPONSIBLE FOR TRANSLATION ERRORS. DO NOT USE THESE CONSTRUCTION DOCUMENTS IF THE PERMIT HAS EXPIRED OR IS REVOKED AT ALL.
2. THE RECIPIENT RECOGNIZES AND ACKNOWLEDGES THAT THE USE OF THIS INFORMATION WILL BE AT THEIR SOLE RISK AND WITHOUT ANY LIABILITY OR LEGAL EXPOSURE TO DESIGN PATH STUDIO. NO WARRANTIES OF ANY NATURE, WHETHER EXPRESS OR IMPLIED, SHALL ATTACH TO THESE DOCUMENTS AND THE INFORMATION CONTAINED THEREON. ANY USE, REUSE, OR ALTERATION OF THESE DOCUMENTS BY THE RECIPIENT OR BY OTHERS WILL BE AT THE RECIPIENT'S RISK AND FULL LEGAL RESPONSIBILITY. FURTHERMORE, THE RECIPIENT WILL, TO THE FULLEST EXTENT PERMITTED BY LAW, DEFEND, INDEMNIFY AND HOLD DESIGN PATH STUDIO AND ITS ARCHITECTS HARMLESS FROM ANY AND ALL CLAIMS, SUITS, LIABILITY, DEMANDS, JUDGMENTS, OR COSTS ARISING OUT OF OR RESULTING THERE FROM ANY USE OF THESE CONSTRUCTION DOCUMENTS FOR OR ON ACCOUNT OF ANY INJURY, DEATH, DAMAGE OR LOSS TO PERSONS OR PROPERTY, DIRECT OR CONSEQUENTIAL DAMAGES IN ANY AMOUNT. THIS INDEMNITY DOES NOT APPLY TO THE SOLE NEGLIGENCE OR WILLFUL MISCONDUCT OF DESIGN PATH STUDIO OR ITS ARCHITECTS.
3. THE DESIGNS REPRESENTED BY THESE PLANS ARE COPYRIGHTED AND ARE SUBJECT TO COPYRIGHT PROTECTION.
4. IF THE RECIPIENT DOES NOT AGREE WITH THE ABOVE CONDITIONS, DO NOT PROCEED WITH CONSTRUCTION OF AN ADU OR OTHER IMPROVEMENT UNDER THESE PLANS AT ALL.

project
City of Perris
Pre-Approved
ADU Program

revisions
1

description
Exterior
Elevations
Craftsman
Reverse

date 4 April 2025

project no. PERRIS PRADU

drawn by DESIGN PATH STUDIO

sheet no. A3.1R

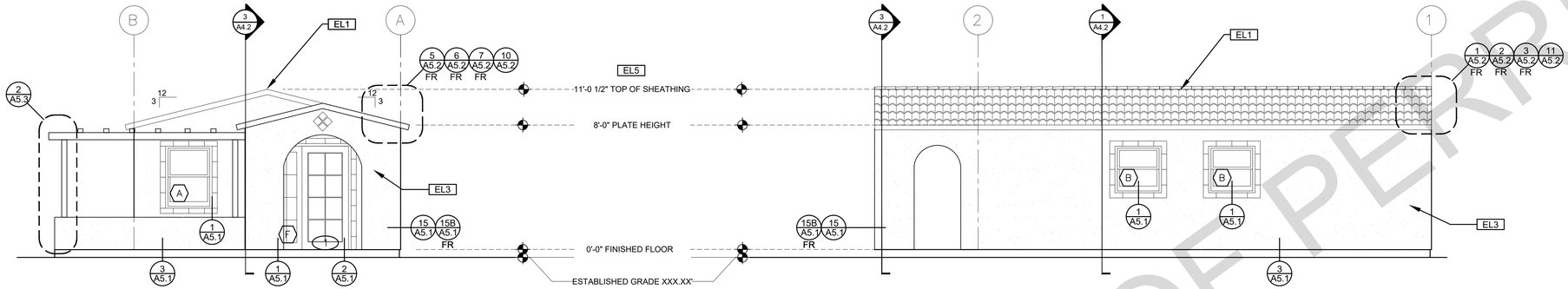

ELEVATION - A
1/4"=1'-0" SPANISH

ELEVATION - B
1/4"=1'-0" SPANISH

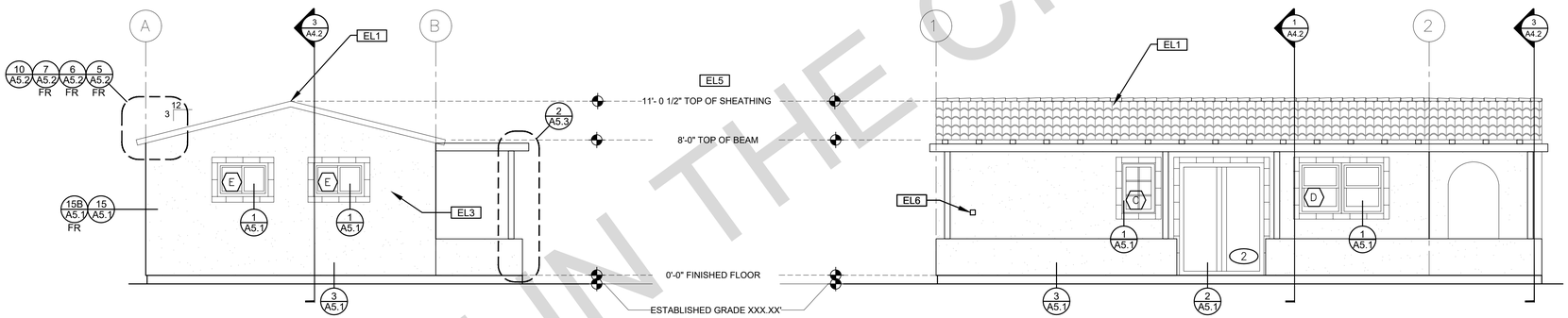

ELEVATION - C
1/4"=1'-0" SPANISH

ELEVATION - D
1/4"=1'-0" SPANISH

ELEVATION KEYNOTES

- EL1 MINIMUM CLASS A ROOF ASSEMBLY - SEE SHEET T1.1 FOR MANUFACTURER SPECIFICATIONS
- EL2 SIDING - SEE SHEET T1.1 FOR MANUFACTURER SPECIFICATIONS
- EL3 STUCCO - SEE SHEET T1.1 FOR MANUFACTURER SPECIFICATIONS
- EL4 STONE VENEER - SEE SHEET T1.1 FOR MANUFACTURER SPECIFICATIONS
- EL5 HEIGHT IS MEASURED AT THE BUILDING LINE, FROM THE LOWER OF EXISTING AND PROPOSED GRADES
- EL6 DRYER VENT TERMINATION (MINIMUM OF 3 FT FROM ANY OPENING)

ELEVATION GENERAL NOTES

1. ALL DIMENSIONS TO FINISH FACE, U.N.O.

2. ALL DOORS SHOULD BE 3 1/2" FROM NEAREST INTERSECTING WALL AT HINGED SIDE, U.N.O.

3. WRITTEN DIMENSIONS TO PREVAIL OVER SCALING OF DRAWINGS. SUBCONTRACTOR TO VERIFY ALL DIM. PRIOR TO CONSTRUCTION AND IMMEDIATELY NOTIFY ARCHITECT OF ANY DISCREPANCIES.

4. REFER TO FRAMING PLANS,FLOOR PLANS, AND SECTIONS FOR CLARIFICATION AND DIMENSIONS

5. SEE SCHEDULE FOR DOOR AND WINDOW INFORMATION AND HEIGHTS

6. LATH & PLASTER
A. MATERIALS FOR PLASTER IS TO BE THE STANDARD PRODUCTS OF RECOGNIZED MANUFACTURES, AND SHALL BE AS MANUFACTURED BY US GYPSUM CO. AND APPROVED BY THE LATH AND PLASTER INSTIGAT OR APPROVED EQUAL.
B. ALL PLASTER CORNER BEADS, CASING BEADS, CONTROL JOINTS,EXPANSION SCREEDS AND ACCESSORIES ARE TO BE GALVANIZED.PROVIDE CASING BEADS AT ALL JOINTS OF STUCCO TO DISSIMILAR SURFACES UNLESS OTHERWISE NOTED
C. WHERE INDICATED ON THE DRAWINGS, PORTLAND CEMENT PLASTER IS TO BE HAND APPLIED (3) THREE COAT WORK, 7/8" THICK ON EXTERIOR SURFACES. THE COATS ARE TO CONSIST OF A SCRATCH (3/8" AND A TWO COAT FINISH (1/8" MIN.) COAT PROPORTIONED AND MIXED ADS RECOMMENDED BY THE CALIFORNIA LATHING AND PLASTERING CONTRACTORS ASSOCIATION.

7. FRAMING ELEVATIONS, INCLUDING FLOOR PLATES AND FLOOR LEVEL ELEVATIONS ARE MEASURED FROM BUILDING FINISH FLOOR, U.N.O.

8. SEE ROOF PLAN FOR APPROXIMATE DOWNSPOUT LOCATIONS, U.N.O.

10. CONTRACTOR TO VERIFY COLOR SCHEME WITH OWNER BEFORE PERFORMING THE WORK

LEGEND

- SECTION CUT
- ELEVATION CALLOUT
- DETAIL DRAWING REF.
- ELEVATION MARKER
- KEYNOTE
- DOOR SYMBOL
- WINDOW SYMBOL
- TEMPERED GLASS
- SPRAY FIN. STUCCO
- SIDING
- STONE VENEER
- ROOFING

FOR USE IN IN THE CITY OF PERRIS

DESIGN PATH STUDIO
architecture + engineering + planning
DESIGNPATHSTUDIO.COM

BY USING THESE PERMIT READY CONSTRUCTION DOCUMENTS, THE RECIPIENT ACKNOWLEDGES, ACCEPTS AND VOLUNTARILY AFFIRMS THE FOLLOWING CONDITIONS:
1. THE USE OF THIS INFORMATION IS RESTRICTED TO THE ORIGINAL PROJECT FOR WHICH IT WAS PREPARED FOR THE PERMIT READY ACCESSORY DWELLING UNIT (ADU) PROGRAM FOR THE CITY OF PERRIS ONLY. THIS IS A LIMITED SET OF STANDARDIZED ADU PLANS AND SPECIFICATIONS APPROVED BY THE CITY OF PERRIS BUILDING DEPARTMENT. BUILDING CODES DO CHANGE OVER TIME AND RECIPIENT SHALL ENSURE FULL COMPLIANCE UNDER ALL CODES THEN IN EFFECT AT THE TIME OF THE SUBJECT PERMIT. THIS DOES NOT ELIMINATE OR REDUCE THE RECIPIENT'S RESPONSIBILITY TO VERIFY ANY AND ALL INFORMATION RELEVANT TO THE RECIPIENT'S WORK AND RESPONSIBILITY ON THIS PROJECT. DESIGN PATH STUDIO SHALL NOT BE RESPONSIBLE FOR TRANSLATION ERRORS. DO NOT USE THESE CONSTRUCTION DOCUMENTS IF THE PERMIT HAS EXPIRED OR IS REVOKED AT ALL.
2. THE RECIPIENT RECOGNIZES AND ACKNOWLEDGES THAT THE USE OF THIS INFORMATION WILL BE AT THEIR SOLE RISK AND WITHOUT ANY LIABILITY OR LEGAL EXPOSURE TO DESIGN PATH STUDIO. NO WARRANTIES OF ANY NATURE, WHETHER EXPRESS OR IMPLIED, SHALL ATTACH TO THESE DOCUMENTS AND THE INFORMATION CONTAINED THEREON. ANY USE, REUSE, OR ALTERATION OF THESE DOCUMENTS BY THE RECIPIENT OR BY OTHERS WILL BE AT THE RECIPIENT'S RISK AND FULL LEGAL RESPONSIBILITY. FURTHERMORE, THE RECIPIENT WILL, TO THE FULLEST EXTENT PERMITTED BY LAW, DEFEND, INDEMNIFY AND HOLD DESIGN PATH STUDIO AND ITS ARCHITECTS HARMLESS FROM ANY AND ALL CLAIMS, SUITS, LIABILITY, DEMANDS, JUDGMENTS, OR COSTS ARISING OUT OF OR RESULTING THERE FROM ANY USE OF THESE CONSTRUCTION DOCUMENTS FOR OR ON ACCOUNT OF ANY INJURY, DEATH, DAMAGE OR LOSS TO PERSONS OR PROPERTY, DIRECT OR CONSEQUENTIAL DAMAGES IN ANY AMOUNT. THIS INDEMNITY DOES NOT APPLY TO THE SOLE NEGLIGENCE OR WILLFUL MISCONDUCT OF DESIGN PATH STUDIO OR ITS ARCHITECTS.
3. THE DESIGNS REPRESENTED BY THESE PLANS ARE COPYRIGHTED AND ARE SUBJECT TO COPYRIGHT PROTECTION.
4. IF THE RECIPIENT DOES NOT AGREE WITH THE ABOVE CONDITIONS, DO NOT PROCEED WITH CONSTRUCTION OF AN ADU OR OTHER IMPROVEMENT UNDER THESE PLANS AT ALL.

project
City of Perris
Pre-Approved
ADU Program

revisions
01

description
Exterior
Elevations
Spanish

date	4 April 2025
project no.	PERRIS PRADU
drawn by	DESIGN PATH STUDIO
sheet no.	A3.2

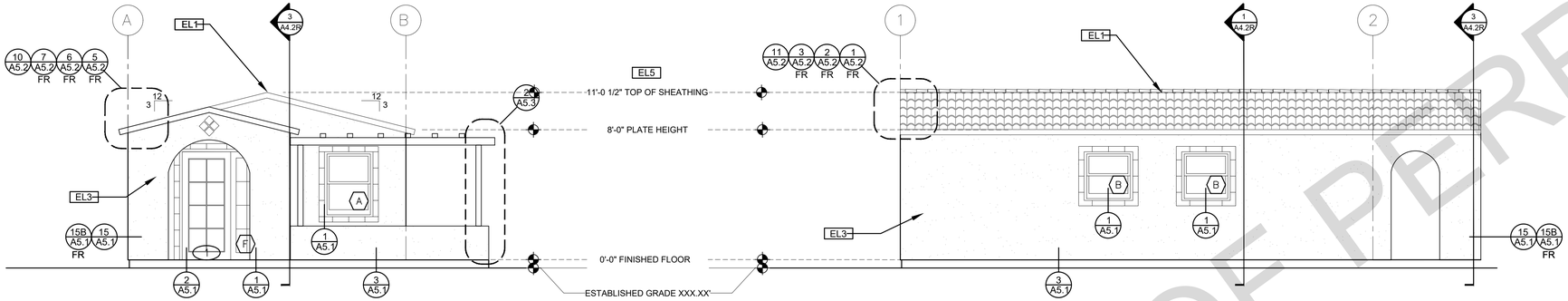

ELEVATION - A

1/4"=1'-0" SPANISH - REVERSE

ELEVATION - B

1/4"=1'-0" SPANISH - REVERSE

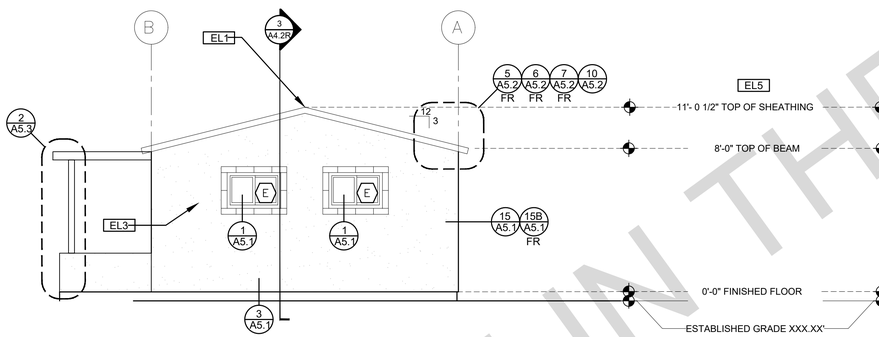

ELEVATION - C

1/4"=1'-0" SPANISH - REVERSE

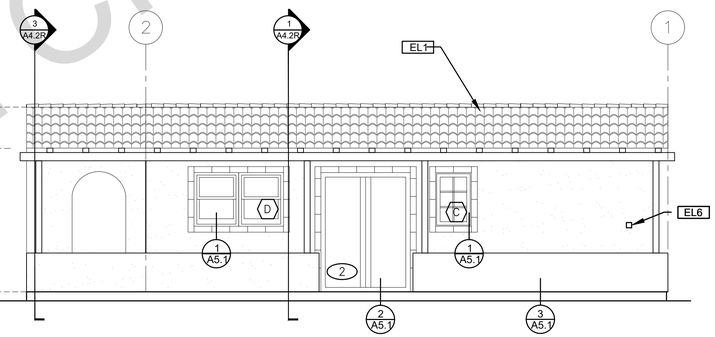

ELEVATION - D

1/4"=1'-0" SPANISH - REVERSE

ELEVATION KEYNOTES

- EL1 MINIMUM CLASS A ROOF ASSEMBLY - SEE SHEET T1.1 FOR MANUFACTURER SPECIFICATIONS
- EL2 SIDING - SEE SHEET T1.1 FOR MANUFACTURER SPECIFICATIONS
- EL3 STUCCO - SEE SHEET T1.1 FOR MANUFACTURER SPECIFICATIONS
- EL4 STONE VENEER - SEE SHEET T1.1 FOR MANUFACTURER SPECIFICATIONS
- EL5 HEIGHT IS MEASURED AT THE BUILDING LINE, FROM THE LOWER OF EXISTING AND PROPOSED GRADES
- EL6 DRYER VENT TERMINATION (MINIMUM OF 3 FT FROM ANY OPENING)

ELEVATION GENERAL NOTES

1. ALL DIMENSIONS TO FINISH FACE, U.N.O.

2. ALL DOORS SHOULD BE 3 1/2" FROM NEAREST INTERSECTING WALL AT HINGED SIDE, U.N.O.

3. WRITTEN DIMENSIONS TO PREVAIL OVER SCALING OF DRAWINGS. SUBCONTRACTOR TO VERIFY ALL DIM. PRIOR TO CONSTRUCTION AND IMMEDIATELY NOTIFY ARCHITECT OF ANY DISCREPANCIES.

4. REFER TO FRAMING PLANS,FLOOR PLANS, AND SECTIONS FOR CLARIFICATION AND DIMENSIONS

5. SEE SCHEDULE FOR DOOR AND WINDOW INFORMATION AND HEIGHTS

6. LATH & PLASTER
A. MATERIALS FOR PLASTER IS TO BE THE STANDARD PRODUCTS OF RECOGNIZED MANUFACTURES, AND SHALL BE AS MANUFACTURED BY US GYPSUM CO. AND APPROVED BY THE LATH AND PLASTER INSTIGAT OR APPROVED EQUAL.
B. ALL PLASTER CORNER BEADS, CASING BEADS, CONTROL JOINTS,EXPANSION SCREEDS AND ACCESSORIES ARE TO BE GALVANIZED.PROVIDE CASING BEADS AT ALL JOINTS OF STUCCO TO DISSIMILAR SURFACES UNLESS OTHERWISE NOTED
C. WHERE INDICATED ON THE DRAWINGS, PORTLAND CEMENT PLASTER IS TO BE HAND APPLIED (3) THREE COAT WORK, 7/8" THICK ON EXTERIOR SURFACES. THE COATS ARE TO CONSIST OF A SCRATCH (3/8" AND A TWO COAT FINISH (1/8" MIN.) COAT PROPORTIONED AND MIXED ADS RECOMMENDED BY THE CALIFORNIA LATHING AND PLASTERING CONTRACTORS ASSOCIATION.

7. FRAMING ELEVATIONS, INCLUDING FLOOR PLATES AND FLOOR LEVEL ELEVATIONS ARE MEASURED FROM BUILDING FINISH FLOOR, U.N.O.

8. SEE ROOF PLAN FOR APPROXIMATE DOWNSPOUT LOCATIONS, U.N.O.

10. CONTRACTOR TO VERIFY COLOR SCHEME WITH OWNER BEFORE PERFORMING THE WORK

LEGEND

- SECTION CUT
- ELEVATION CALLOUT
- DETAIL DRAWING REF.
- ELEVATION MARKER
- KEYNOTE
- DOOR SYMBOL
- WINDOW SYMBOL
- TEMPERED GLASS
- SPRAY FIN. STUCCO
- SIDING
- STONE VENEER
- ROOFING

FOR USE IN IN THE CITY OF PERRIS

DESIGN PATH STUDIO
architecture + engineering + planning
DESIGNPATHSTUDIO.COM

BY USING THESE PERMIT READY CONSTRUCTION DOCUMENTS, THE RECIPIENT ACKNOWLEDGES, ACCEPTS AND VOLUNTARILY AFFIRMS THE FOLLOWING CONDITIONS:
1. THE USE OF THIS INFORMATION IS RESTRICTED TO THE ORIGINAL PROJECT FOR WHICH IT WAS PREPARED FOR THE PERMIT READY ACCESSORY DWELLING UNIT (ADU) PROGRAM FOR THE CITY OF PERRIS ONLY. THIS IS A LIMITED SET OF STANDARDIZED ADU PLANS AND SPECIFICATIONS APPROVED BY THE CITY OF PERRIS BUILDING DEPARTMENT. BUILDING CODES DO CHANGE OVER TIME AND RECIPIENT SHALL ENSURE FULL COMPLIANCE UNDER ALL CODES THEN IN EFFECT AT THE TIME OF THE SUBJECT PERMIT. THIS DOES NOT ELIMINATE OR REDUCE THE RECIPIENT'S RESPONSIBILITY TO VERIFY ANY AND ALL INFORMATION RELEVANT TO THE RECIPIENT'S WORK AND RESPONSIBILITY ON THIS PROJECT. DESIGN PATH STUDIO SHALL NOT BE RESPONSIBLE FOR TRANSLATION ERRORS. DO NOT USE THESE CONSTRUCTION DOCUMENTS IF THE PERMIT HAS EXPIRED OR IS REVOKED AT ALL.
2. THE RECIPIENT RECOGNIZES AND ACKNOWLEDGES THAT THE USE OF THIS INFORMATION WILL BE AT THEIR SOLE RISK AND WITHOUT ANY LIABILITY OR LEGAL EXPOSURE TO DESIGN PATH STUDIO. NO WARRANTIES OF ANY NATURE, WHETHER EXPRESS OR IMPLIED, SHALL ATTACH TO THESE DOCUMENTS AND THE INFORMATION CONTAINED THEREON. ANY USE, REUSE, OR ALTERATION OF THESE DOCUMENTS BY THE RECIPIENT OR BY OTHERS WILL BE AT THE RECIPIENT'S RISK AND FULL LEGAL RESPONSIBILITY. FURTHERMORE, THE RECIPIENT WILL, TO THE FULLEST EXTENT PERMITTED BY LAW, DEFEND, INDEMNIFY AND HOLD DESIGN PATH STUDIO AND ITS ARCHITECTS HARMLESS FROM ANY AND ALL CLAIMS, SUITS, LIABILITY, DEMANDS, JUDGMENTS, OR COSTS ARISING OUT OF OR RESULTING THERE FROM ANY USE OF THESE CONSTRUCTION DOCUMENTS FOR OR ON ACCOUNT OF ANY INJURY, DEATH, DAMAGE OR LOSS TO PERSONS OR PROPERTY, DIRECT OR CONSEQUENTIAL DAMAGES IN ANY AMOUNT. THIS INDEMNITY DOES NOT APPLY TO THE SOLE NEGLIGENCE OR WILLFUL MISCONDUCT OF DESIGN PATH STUDIO OR ITS ARCHITECTS.
3. THE DESIGNS REPRESENTED BY THESE PLANS ARE COPYRIGHTED AND ARE SUBJECT TO COPYRIGHT PROTECTION.
4. IF THE RECIPIENT DOES NOT AGREE WITH THE ABOVE CONDITIONS, DO NOT PROCEED WITH CONSTRUCTION OF AN ADU OR OTHER IMPROVEMENT UNDER THESE PLANS AT ALL.

project
City of Perris
Pre-Approved
ADU Program

revisions
01

description
Exterior
Elevations
Spanish
Reverse

date 4 April 2025

project no. PERRIS PRADU

drawn by DESIGN PATH STUDIO

sheet no. A3.2R

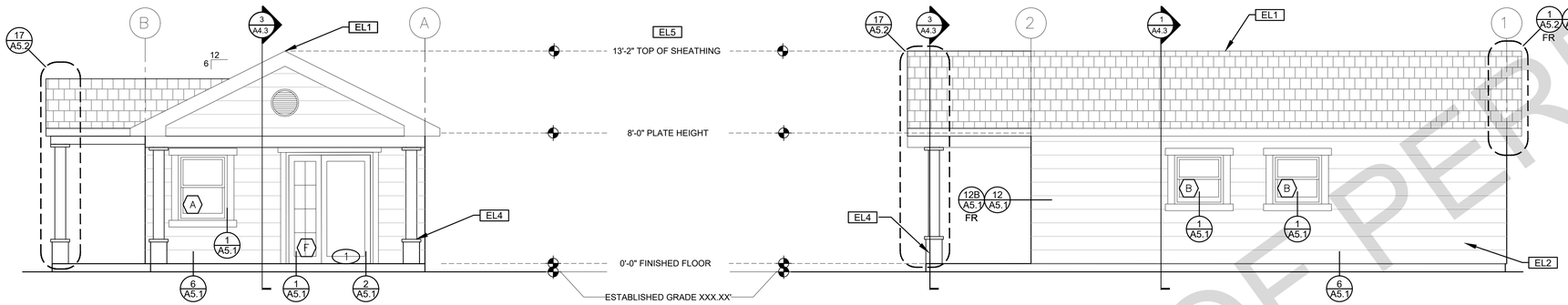

ELEVATION - A

1/4"=1'-0" TRADITIONAL

ELEVATION - B

1/4"=1'-0" TRADITIONAL

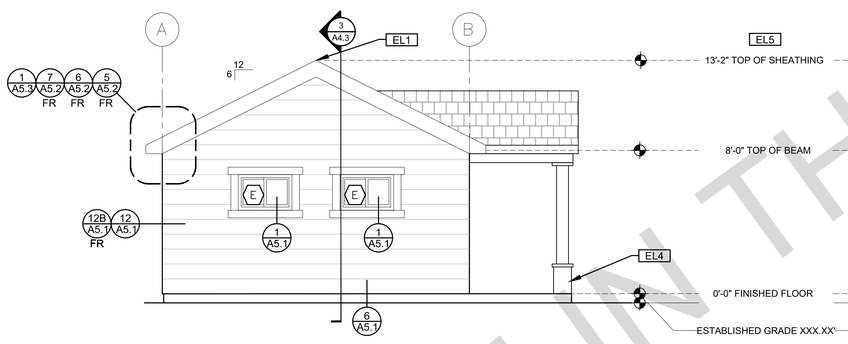

ELEVATION - C

1/4"=1'-0" TRADITIONAL

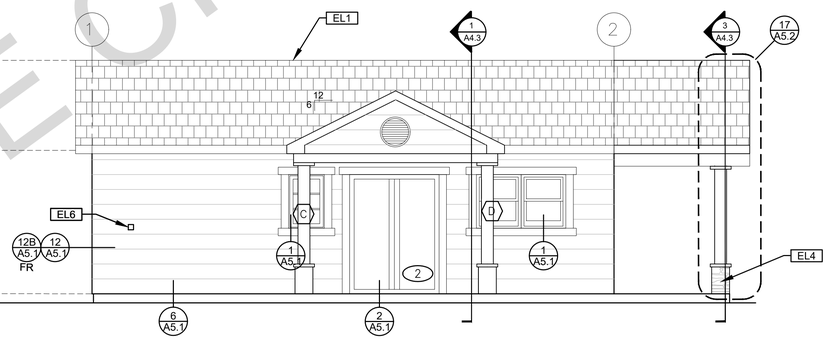

ELEVATION - D

1/4"=1'-0" TRADITIONAL

ELEVATION KEYNOTES

- EL1 MINIMUM CLASS A ROOF ASSEMBLY - SEE SHEET T1.1 FOR MANUFACTURER SPECIFICATIONS
- EL2 SIDING - SEE SHEET T1.1 FOR MANUFACTURER SPECIFICATIONS
- EL3 STUCCO - SEE SHEET T1.1 FOR MANUFACTURER SPECIFICATIONS
- EL4 STONE VENEER - SEE SHEET T1.1 FOR MANUFACTURER SPECIFICATIONS
- EL5 HEIGHT IS MEASURED AT THE BUILDING LINE, FROM THE LOWER OF EXISTING AND PROPOSED GRADES
- EL6 DRYER VENT TERMINATION (MINIMUM OF 3 FT FROM ANY OPENING)

ELEVATION GENERAL NOTES

1. ALL DIMENSIONS TO FINISH FACE, U.N.O.

2. ALL DOORS SHOULD BE 3 1/2" FROM NEAREST INTERSECTING WALL AT HINGED SIDE, U.N.O.

3. WRITTEN DIMENSIONS TO PREVAIL OVER SCALING OF DRAWINGS. SUBCONTRACTOR TO VERIFY ALL DIM. PRIOR TO CONSTRUCTION AND IMMEDIATELY NOTIFY ARCHITECT OF ANY DISCREPANCIES.

4. REFER TO FRAMING PLANS,FLOOR PLANS, AND SECTIONS FOR CLARIFICATION AND DIMENSIONS

5. SEE SCHEDULE FOR DOOR AND WINDOW INFORMATION AND HEIGHTS

6. LATH & PLASTER
A. MATERIALS FOR PLASTER IS TO BE THE STANDARD PRODUCTS OF RECOGNIZED MANUFACTURES, AND SHALL BE AS MANUFACTURED BY US GYPSUM CO. AND APPROVED BY THE LATH AND PLASTER INSTIGAT OR APPROVED EQUAL.
B. ALL PLASTER CORNER BEADS, CASING BEADS, CONTROL JOINTS,EXPANSION SCREEDS AND ACCESSORIES ARE TO BE GALVANIZED.PROVIDE CASING BEADS AT ALL JOINTS OF STUCCO TO DISSIMILAR SURFACES UNLESS OTHERWISE NOTED
C. WHERE INDICATED ON THE DRAWINGS, PORTLAND CEMENT PLASTER IS TO BE HAND APPLIED (3) THREE COAT WORK, 7/8" THICK ON EXTERIOR SURFACES. THE COATS ARE TO CONSIST OF A SCRATCH (3/8" AND A TWO COAT FINISH (1/8" MIN.) COAT PROPORTIONED AND MIXED ADS RECOMMENDED BY THE CALIFORNIA LATHING AND PLASTERING CONTRACTORS ASSOCIATION.

7. FRAMING ELEVATIONS, INCLUDING FLOOR PLATES AND FLOOR LEVEL ELEVATIONS ARE MEASURED FROM BUILDING FINISH FLOOR, U.N.O.

8. SEE ROOF PLAN FOR APPROXIMATE DOWNSPOUT LOCATIONS, U.N.O.

10. CONTRACTOR TO VERIFY COLOR SCHEME WITH OWNER BEFORE PERFORMING THE WORK

LEGEND

- SECTION CUT
- ELEVATION CALLOUT
- DETAIL DRAWING REF.
- X'-X" ELEVATION MARKER
- 1 KEYNOTE
- X DOOR SYMBOL
- 1 WINDOW SYMBOL
- T TEMPERED GLASS
- SPRAY FIN. STUCCO
- SIDING
- STONE VENEER
- ROOFING

FOR USE IN IN THE CITY OF PERRIS

DESIGN PATH STUDIO
architecture + engineering + planning
DESIGNPATHSTUDIO.COM

BY USING THESE PERMIT READY CONSTRUCTION DOCUMENTS, THE RECIPIENT ACKNOWLEDGES, ACCEPTS AND VOLUNTARILY AFFIRMS THE FOLLOWING CONDITIONS:
1. THE USE OF THIS INFORMATION IS RESTRICTED TO THE ORIGINAL PROJECT FOR WHICH IT WAS PREPARED FOR THE PERMIT READY ACCESSORY DWELLING UNIT (ADU) PROGRAM FOR THE CITY OF PERRIS ONLY. THIS IS A LIMITED SET OF STANDARDIZED ADU PLANS AND SPECIFICATIONS APPROVED BY THE CITY OF PERRIS BUILDING DEPARTMENT. BUILDING CODES DO CHANGE OVER TIME AND RECIPIENT SHALL ENSURE FULL COMPLIANCE UNDER ALL CODES THEN IN EFFECT AT THE TIME OF THE SUBJECT PERMIT. THIS DOES NOT ELIMINATE OR REDUCE THE RECIPIENT'S RESPONSIBILITY TO VERIFY ANY AND ALL INFORMATION RELEVANT TO THE RECIPIENT'S WORK AND RESPONSIBILITY ON THIS PROJECT. DESIGN PATH STUDIO SHALL NOT BE RESPONSIBLE FOR TRANSLATION ERRORS. DO NOT USE THESE CONSTRUCTION DOCUMENTS IF THE PERMIT HAS EXPIRED OR IS REVOKED AT ALL.
2. THE RECIPIENT RECOGNIZES AND ACKNOWLEDGES THAT THE USE OF THIS INFORMATION WILL BE AT THEIR SOLE RISK AND WITHOUT ANY LIABILITY OR LEGAL EXPOSURE TO DESIGN PATH STUDIO. NO WARRANTIES OF ANY NATURE, WHETHER EXPRESS OR IMPLIED, SHALL ATTACH TO THESE DOCUMENTS AND THE INFORMATION CONTAINED THEREON. ANY USE, REUSE, OR ALTERATION OF THESE DOCUMENTS BY THE RECIPIENT OR BY OTHERS WILL BE AT THE RECIPIENT'S RISK AND FULL LEGAL RESPONSIBILITY. FURTHERMORE, THE RECIPIENT WILL, TO THE FULLEST EXTENT PERMITTED BY LAW, DEFEND, INDEMNIFY AND HOLD DESIGN PATH STUDIO AND ITS ARCHITECTS HARMLESS FROM ANY AND ALL CLAIMS, SUITS, LIABILITY, DEMANDS, JUDGMENTS, OR COSTS ARISING OUT OF OR RESULTING THERE FROM ANY USE OF THESE CONSTRUCTION DOCUMENTS FOR OR ON ACCOUNT OF ANY INJURY, DEATH, DAMAGE OR LOSS TO PERSONS OR PROPERTY, DIRECT OR CONSEQUENTIAL DAMAGES IN ANY AMOUNT. THIS INDEMNITY DOES NOT APPLY TO THE SOLE NEGLIGENCE OR WILLFUL MISCONDUCT OF DESIGN PATH STUDIO OR ITS ARCHITECTS.
3. THE DESIGNS REPRESENTED BY THESE PLANS ARE COPYRIGHTED AND ARE SUBJECT TO COPYRIGHT PROTECTION.
4. IF THE RECIPIENT DOES NOT AGREE WITH THE ABOVE CONDITIONS, DO NOT PROCEED WITH CONSTRUCTION OF AN ADU OR OTHER IMPROVEMENT UNDER THESE PLANS AT ALL.

project
City of Perris
Pre-Approved
ADU Program

revisions
0

description
Exterior
Elevations
Traditional

date 4 April 2025

project no. PERRIS PRADU

drawn by DESIGN PATH STUDIO

sheet no. A3.3

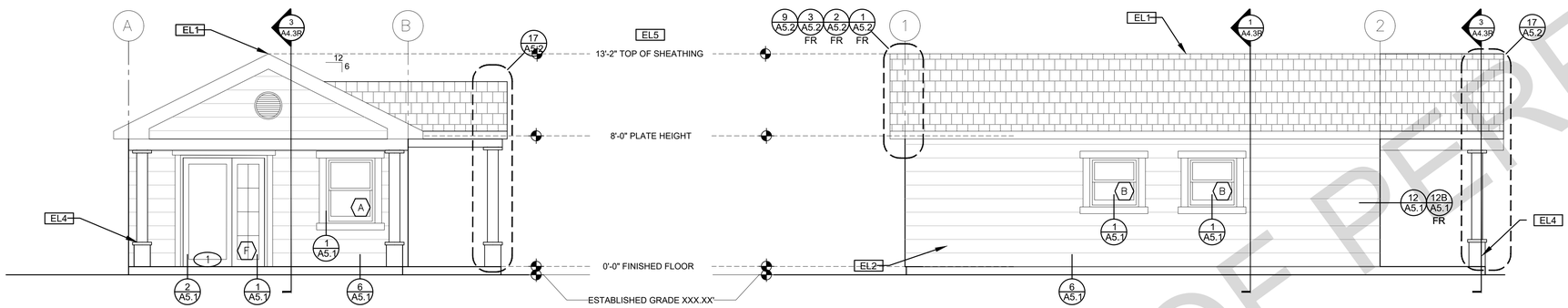

ELEVATION - A

1/4"=1'-0" TRADITIONAL - REVERSE

ELEVATION - B

1/4"=1'-0" TRADITIONAL - REVERSE

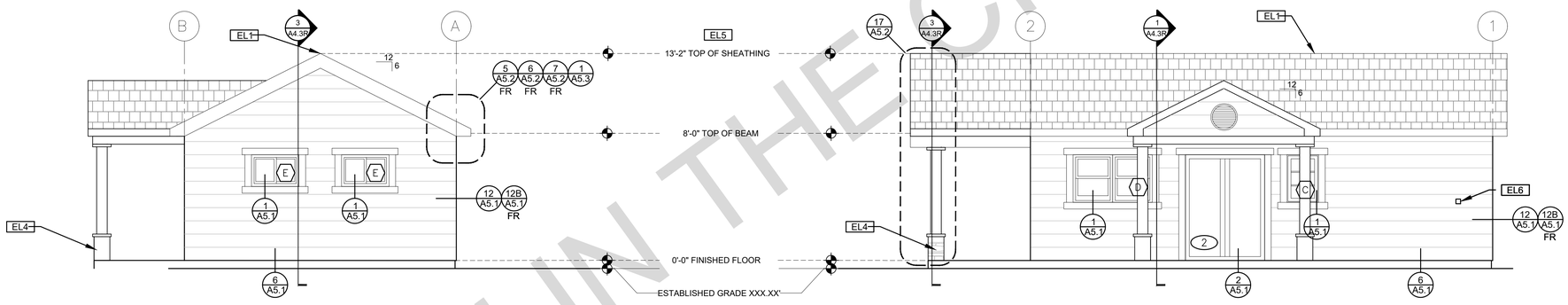

ELEVATION - C

1/4"=1'-0" TRADITIONAL - REVERSE

ELEVATION - D

1/4"=1'-0" TRADITIONAL - REVERSE

ELEVATION KEYNOTES

- EL1 MINIMUM CLASS A ROOF ASSEMBLY - SEE SHEET T1.1 FOR MANUFACTURER SPECIFICATIONS
- EL2 SIDING - SEE SHEET T1.1 FOR MANUFACTURER SPECIFICATIONS
- EL3 STUCCO - SEE SHEET T1.1 FOR MANUFACTURER SPECIFICATIONS
- EL4 STONE VENEER - SEE SHEET T1.1 FOR MANUFACTURER SPECIFICATIONS
- EL5 HEIGHT IS MEASURED AT THE BUILDING LINE, FROM THE LOWER OF EXISTING AND PROPOSED GRADES
- EL6 DRYER VENT TERMINATION (MINIMUM OF 3 FT FROM ANY OPENING)

ELEVATION GENERAL NOTES

1. ALL DIMENSIONS TO FINISH FACE, U.N.O.

2. ALL DOORS SHOULD BE 3 1/2" FROM NEAREST INTERSECTING WALL AT HINGED SIDE, U.N.O.

3. WRITTEN DIMENSIONS TO PREVAIL OVER SCALING OF DRAWINGS. SUBCONTRACTOR TO VERIFY ALL DIM. PRIOR TO CONSTRUCTION AND IMMEDIATELY NOTIFY ARCHITECT OF ANY DISCREPANCIES.

4. REFER TO FRAMING PLANS,FLOOR PLANS, AND SECTIONS FOR CLARIFICATION AND DIMENSIONS

5. SEE SCHEDULE FOR DOOR AND WINDOW INFORMATION AND HEIGHTS

6. LATH & PLASTER
A. MATERIALS FOR PLASTER IS TO BE THE STANDARD PRODUCTS OF RECOGNIZED MANUFACTURES, AND SHALL BE AS MANUFACTURED BY US GYPSUM CO. AND APPROVED BY THE LATH AND PLASTER INSTIGAT OR APPROVED EQUAL.
B. ALL PLASTER CORNER BEADS, CASING BEADS, CONTROL JOINTS,EXPANSION SCREEDS AND ACCESSORIES ARE TO BE GALVANIZED.PROVIDE CASING BEADS AT ALL JOINTS OF STUCCO TO DISSIMILAR SURFACES UNLESS OTHERWISE NOTED
C. WHERE INDICATED ON THE DRAWINGS, PORTLAND CEMENT PLASTER IS TO BE HAND APPLIED (3) THREE COAT WORK, 7/8" THICK ON EXTERIOR SURFACES. THE COATS ARE TO CONSIST OF A SCRATCH (3/8" AND A TWO COAT FINISH (1/8" MIN.) COAT PROPORTIONED AND MIXED ADS RECOMMENDED BY THE CALIFORNIA LATHING AND PLASTERING CONTRACTORS ASSOCIATION.

7. FRAMING ELEVATIONS, INCLUDING FLOOR PLATES AND FLOOR LEVEL ELEVATIONS ARE MEASURED FROM BUILDING FINISH FLOOR, U.N.O.

8. SEE ROOF PLAN FOR APPROXIMATE DOWNSPOUT LOCATIONS, U.N.O.

10. CONTRACTOR TO VERIFY COLOR SCHEME WITH OWNER BEFORE PERFORMING THE WORK

LEGEND

- SECTION CUT
- ELEVATION CALLOUT
- DETAIL DRAWING REF.
- X'-X" ELEVATION MARKER
- 1 KEYNOTE
- X DOOR SYMBOL
- 1 WINDOW SYMBOL
- T TEMPERED GLASS
- SPRAY FIN. STUCCO
- SIDING
- STONE VENEER
- ROOFING

FOR USE IN IN THE CITY OF PERRIS

DESIGN PATH STUDIO
architecture + engineering + planning
DESIGNPATHSTUDIO.COM

BY USING THESE PERMIT READY CONSTRUCTION DOCUMENTS, THE RECIPIENT ACKNOWLEDGES, ACCEPTS AND VOLUNTARILY AFFIRMS THE FOLLOWING CONDITIONS:
1. THE USE OF THIS INFORMATION IS RESTRICTED TO THE ORIGINAL PROJECT FOR WHICH IT WAS PREPARED FOR THE PERMIT READY ACCESSORY DWELLING UNIT (ADU) PROGRAM FOR THE CITY OF PERRIS ONLY. THIS IS A LIMITED SET OF STANDARDIZED ADU PLANS AND SPECIFICATIONS APPROVED BY THE CITY OF PERRIS BUILDING DEPARTMENT. BUILDING CODES DO CHANGE OVER TIME AND RECIPIENT SHALL ENSURE FULL COMPLIANCE UNDER ALL CODES THEN IN EFFECT AT THE TIME OF THE SUBJECT PERMIT. THIS DOES NOT ELIMINATE OR REDUCE THE RECIPIENT'S RESPONSIBILITY TO VERIFY ANY AND ALL INFORMATION RELEVANT TO THE RECIPIENT'S WORK AND RESPONSIBILITY ON THIS PROJECT. DESIGN PATH STUDIO SHALL NOT BE RESPONSIBLE FOR TRANSLATION ERRORS. DO NOT USE THESE CONSTRUCTION DOCUMENTS IF THE PERMIT HAS EXPIRED OR IS REVOKED AT ALL.
2. THE RECIPIENT RECOGNIZES AND ACKNOWLEDGES THAT THE USE OF THIS INFORMATION WILL BE AT THEIR SOLE RISK AND WITHOUT ANY LIABILITY OR LEGAL EXPOSURE TO DESIGN PATH STUDIO. NO WARRANTIES OF ANY NATURE, WHETHER EXPRESS OR IMPLIED, SHALL ATTACH TO THESE DOCUMENTS AND THE INFORMATION CONTAINED THEREON. ANY USE, REUSE, OR ALTERATION OF THESE DOCUMENTS BY THE RECIPIENT OR BY OTHERS WILL BE AT THE RECIPIENT'S RISK AND FULL LEGAL RESPONSIBILITY. FURTHERMORE, THE RECIPIENT WILL, TO THE FULLEST EXTENT PERMITTED BY LAW, DEFEND, INDEMNIFY AND HOLD DESIGN PATH STUDIO AND ITS ARCHITECTS HARMLESS FROM ANY AND ALL CLAIMS, SUITS, LIABILITY, DEMANDS, JUDGMENTS, OR COSTS ARISING OUT OF OR RESULTING THERE FROM ANY USE OF THESE CONSTRUCTION DOCUMENTS FOR OR ON ACCOUNT OF ANY INJURY, DEATH, DAMAGE OR LOSS TO PERSONS OR PROPERTY, DIRECT OR CONSEQUENTIAL DAMAGES IN ANY AMOUNT. THIS INDEMNITY DOES NOT APPLY TO THE SOLE NEGLIGENCE OR WILLFUL MISCONDUCT OF DESIGN PATH STUDIO OR ITS ARCHITECTS.
3. THE DESIGNS REPRESENTED BY THESE PLANS ARE COPYRIGHTED AND ARE SUBJECT TO COPYRIGHT PROTECTION.
4. IF THE RECIPIENT DOES NOT AGREE WITH THE ABOVE CONDITIONS, DO NOT PROCEED WITH CONSTRUCTION OF AN ADU OR OTHER IMPROVEMENT UNDER THESE PLANS AT ALL.

project
City of Perris
Pre-Approved
ADU Program

revisions
1

description
Exterior
Elevations
Traditional
Reverse

date 4 April 2025

project no. PERRIS PRADU

drawn by DESIGN PATH STUDIO

sheet no. A3.3R

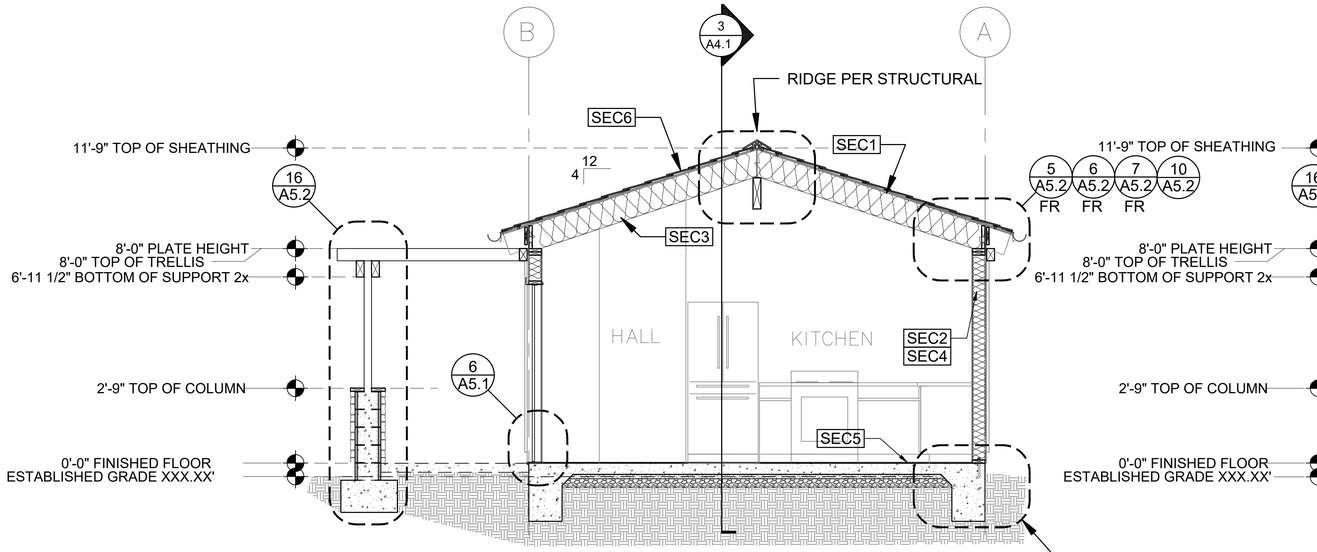

1 SECTION - STUDIO
3/8"=1'-0" CRAFTSMAN

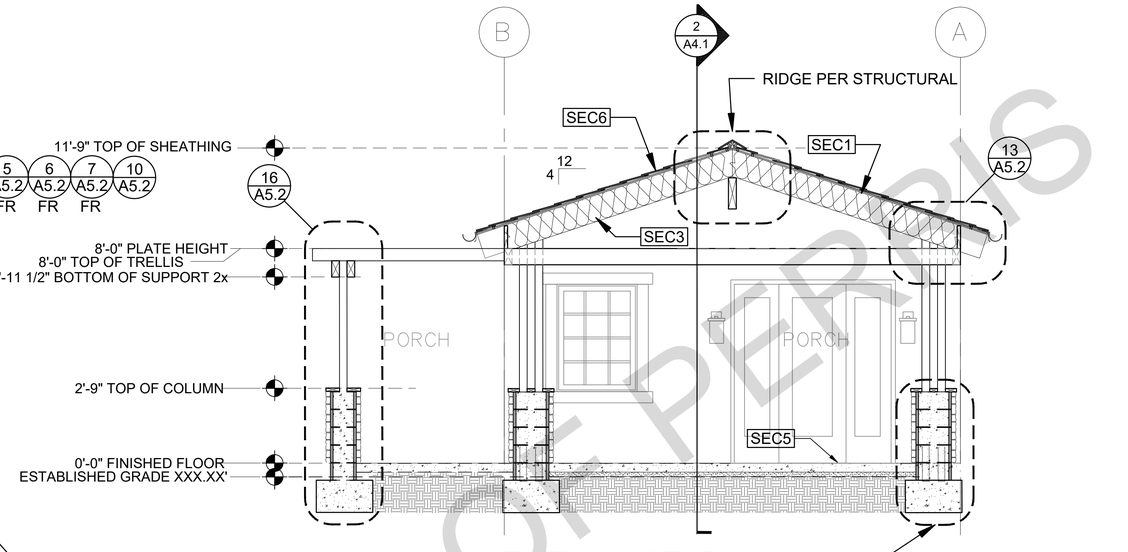

3 SECTION - STUDIO
3/8"=1'-0" CRAFTSMAN

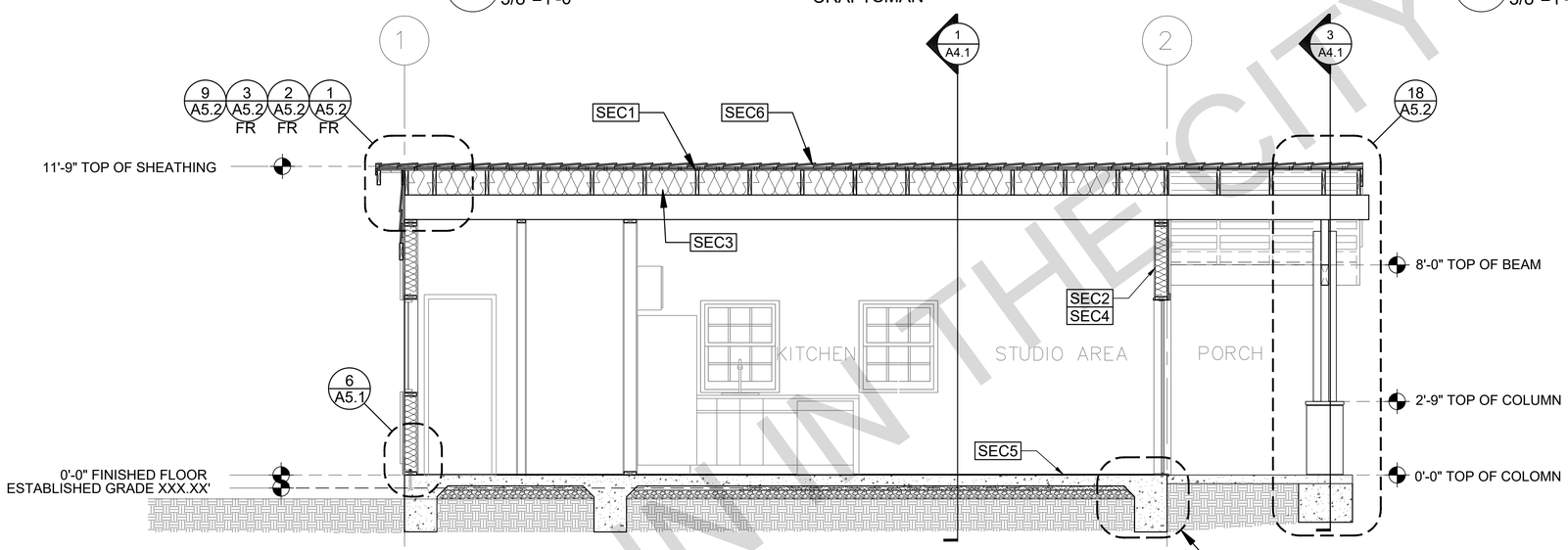

2 SECTION - STUDIO
3/8"=1'-0" CRAFTSMAN

SECTION KEYNOTES

SEC1	RAFTERS PER PLAN SEE STRUCTURAL
SEC2	2X STUDS @ 16" O.C. - SEE STRUCTURAL
SEC3	CEILING INSULATION PER TITLE 24 ENERGY CALCULATIONS
SEC4	WALL INSULATION PER TITLE 24 ENERGY CALCULATIONS
SEC5	CONC. SLAB ON GRADE SEE STRUCTURAL
SEC6	MINIMUM CLASS A ROOF ASSEMBLY - SEE SHEET T1.1 FOR MANUFACTURER SPECIFICATIONS

SECTION GENERAL NOTES

1. METALS
SEE PLANS AND DETAILS FOR LOCATIONS, QUANTITY AND CONFIGURATION OF MISCELLANEOUS IRON AND STEEL WORK INCLUDING ASSORTED CLIPS, BRACKETS ANGLES, STRAPS, POST ANCHORS AND LIKE ITEMS.
FURNISH AND INSTALL ALL SUCH ITEMS NECESSARY TO MAKE A COMPLETE INSTILLATION WHETHER OR NOT SPECIFICALLY DETAILED OR NOTED ON THE DRAWINGS. ALL EXTERIOR METAL AND HARDWARE IS TO BE GALVANIZED. STEEL IS TO BE ASTM A3.

2. RAFTER VENTS ARE TO BE STAINLESS STEEL MESH AND ARE TO BE SIZED TO MEET REQUIRED VENTILATION TO ENCLOSED RAFTER SPACES. MAX ¼" MIN ¼" OPENING SIZE ON VENT SCREEN WITH CORROSION-RESISTANT WIRE SCREEN MATERIAL.

3. FRAMER IS TO LAYOUT CEILING JOISTS/ROOF RAFTERS TO ACCOMMODATE RECESSED LIGHTS EXHAUST FANS OR OTHER ELECTRICAL/MECHANICAL FIXTURES.

4. WOOD SOFFIT/CEILING, SIDING & TRIM
ALL NAILS, FASTENERS AND HARDWARE MUST BE STAINLESS STEEL OR HOT-DIPPED GALVANIZED. STAPLES ARE NOT PERMITTED

5. INSULATION
THERMAL INSULATION IS TO BE FOIL BACKED BATT INSULATION WITH AN R VALUE NOT LESS SPECIFIED IN THE TITLE 24 ENERGY CALCULATIONS. AT BATHROOMS, LAUNDRY ROOM , AND MASTER BED/BATHROOMS INSULATION IS TO BE PROVIDED WITH SOUND INSULATION,

6. FLASHING AND SHEET METAL
ALL FLASHING AND COUNTER FLASHING IS TO BE GALVANIZED AND INSTALLED AS PER SMACNA STANDARDS. ALL PROPOSED FLASHING AND SHEET METAL MATERIALS, GAUGE AND INSTALLATION IS TO BE IN ACCORDANCE WITH SMACNA MANUAL STANDARDS.

7. IN CONCEALED SPACES BETWEEN STAIR STRINGERS AT THE TOP AND BOTTOM OF THE RUN, ENCLOSED SPACES UNDER STAIRS SHALL COMPLY WITH SECTION R302.7.

8. THE PURPOSE OF THESE DRAWINGS IS TO SHOW CONSTRUCTION MATERIALS/ASSEMBLIES. FOR SPECIFIC SIZES AND DETAILS REFER TO ARCHITECTURAL PLANS, ELEVATIONS, DETAILS, & STRUCTURAL PLANS.
*KEYNOTES ONLY APPLY IF REFERNCED ON PLANS
1. INSULATION: REFER TO TITLE 24 REPORT FOR ADDITIONAL RATINGS, REQUIREMENTS, AND INFORMATION
2. FIRE BLOCKING TO BE LOCATED AT THE FOLLOWING LOCATIONS PER 2022 CRC SECTION R302.11:
A. SECTION R302.11:
1. FIREBLOCKING SHALL BE PROVIDED IN CONCEALED SPACES OF STUD WALLS AND PARTITIONS, INCLUDING FURRED SPACES AND PARALLEL ROWS OF STUDS OR STAGGERED STUDS, AS FOLLOWS:
A. VERTICALLY AT CEILING AND FLOOR LEVELS
B. HORIZONTALLY AT INTERVALS NOT EXCEEDING 10FT

9. AT INTERCONNECTIONS BETWEEN CONCEALED VERTICAL AND HORIZONTAL SPACES SUCH AS SOFFITS, DROP CEILINGS AND COVE CEILINGS

10. AT OPENINGS AROUND VENTS, PIPES, DUCTS, CABLES AND WIRES AT CEILINGS AND FLOOR LEVEL, WITH AN APPROVED MATERIAL TO RESIST THE FREE PASSAGE OF FLAME PRODUCTS OF COMBUSTION. THE MATERIAL FILLING THIS ANNULAR SPACE SHALL NOT BE REQUIRED TO MEET THE ASTM E136 REQUIREMENTS
FOR THE FIREBLOCKING OF CHIMNEYS AND FIREPLACES, SEE SECTION R1003.19
FIREBLOCKING OF CORNICES OF A TWO-FAMILY DWELLING IS REQUIRED AT THE LINE OF DWELLING-UNIT SEPARATION

11. SECTION R302.11.1 - FIREBLOCKING MATERIALS SHALL CONSIST OF FOLLOWING MATERIALS:
1. TWO-INCH NOMINAL NUMBER
2. TWO THICKNESS OF ONE-INCH NOMINAL LUMBER WITH BROKEN LAP JOINTS
3. THE THICKNESS OF 0.719-INCH WOOD STRUCTURAL PANELS WITH JOINTS BACKED BY 0.719-INCH WOOD STRUCTURAL PANELS
4. THE THICKNESS OF 0.75-INCH PARTICLE BOARD WITH JOINTS BACKED BY 0.75-INCH PARTICLE BOARD
5. ONE-HALF-INCH GYPSUM BOARD
6. ONE-FOURTH-INCH CEMENT-BASED MILLBOARD
7. BATTS OR BLANKETS OF MINERAL WOOL, MINERAL FIBER OR OTHER APPROVED MATERIAL INSTALLED IN SUCH A MANNER AS TO BE SECURELY RETAINED IN PLACE
8. CELLULOSE INSULATION INSTALLED AS TESTED IN ACCORDANCE WITH ASTM E119 OR UL 263, FOR THE SPECIFIC APPLICATION

LEGEND

SECTION CUT
ELEVATION CALLOUT
DETAIL DRAWING REF.
X-X" ELEVATION MARKER

FOR USE IN THE CITY OF PERRIS

DESIGN PATH STUDIO
architecture + engineering + planning
DESIGNPATHSTUDIO.COM

BY USING THESE PERMIT READY CONSTRUCTION DOCUMENTS, THE RECIPIENT ACKNOWLEDGES, ACCEPTS AND VOLUNTARILY AFFIRMS THE FOLLOWING CONDITIONS:
1. THE USE OF THIS INFORMATION IS RESTRICTED TO THE ORIGINAL PROJECT FOR WHICH IT WAS PREPARED FOR THE PERMIT READY ACCESSORY DWELLING UNIT (ADU) PROGRAM FOR THE CITY OF PERRIS ONLY. THIS IS A LIMITED SET OF STANDARDIZED ADU PLANS AND SPECIFICATIONS APPROVED BY THE CITY OF PERRIS BUILDING DEPARTMENT. BUILDING CODES DO CHANGE OVER TIME AND RECIPIENT SHALL ENSURE FULL COMPLIANCE UNDER ALL CODES THEN IN EFFECT AT THE TIME OF THE SUBJECT PERMIT. THIS DOES NOT ELIMINATE OR REDUCE THE RECIPIENT'S RESPONSIBILITY TO VERIFY ANY AND ALL INFORMATION RELEVANT TO THE RECIPIENT'S WORK AND RESPONSIBILITY ON THIS PROJECT. DESIGN PATH STUDIO SHALL NOT BE RESPONSIBLE FOR TRANSLATION ERRORS. DO NOT USE THESE CONSTRUCTION DOCUMENTS IF THE PERMIT HAS EXPIRED OR IS REVOKED AT ALL.
2. THE RECIPIENT RECOGNIZES AND ACKNOWLEDGES THAT THE USE OF THIS INFORMATION WILL BE AT THEIR SOLE RISK AND WITHOUT ANY LIABILITY OR LEGAL EXPOSURE TO DESIGN PATH STUDIO. NO WARRANTIES OF ANY NATURE, WHETHER EXPRESS OR IMPLIED, SHALL ATTACH TO THESE DOCUMENTS AND THE INFORMATION CONTAINED THEREON. ANY USE, REUSE, OR ALTERATION OF THESE DOCUMENTS BY THE RECIPIENT OR BY OTHERS WILL BE AT THE RECIPIENT'S RISK AND FULL LEGAL RESPONSIBILITY. FURTHERMORE, THE RECIPIENT WILL, TO THE FULLEST EXTENT PERMITTED BY LAW, DEFEND, INDEMNIFY AND HOLD DESIGN PATH STUDIO AND ITS ARCHITECTS HARMLESS FROM ANY AND ALL CLAIMS, SUITS, LIABILITY, DEMANDS, JUDGMENTS, OR COSTS ARISING OUT OF OR RESULTING THERE FROM ANY USE OF THESE CONSTRUCTION DOCUMENTS FOR OR ON ACCOUNT OF ANY INJURY, DEATH, DAMAGE OR LOSS TO PERSONS OR PROPERTY, DIRECT OR CONSEQUENTIAL DAMAGES IN ANY AMOUNT. THIS INDEMNITY DOES NOT APPLY TO THE SOLE NEGLIGENCE OR WILLFUL MISCONDUCT OF DESIGN PATH STUDIO OR ITS ARCHITECTS.
3. THE DESIGNS REPRESENTED BY THESE PLANS ARE COPYRIGHTED AND ARE SUBJECT TO COPYRIGHT PROTECTION.
4. IF THE RECIPIENT DOES NOT AGREE WITH THE ABOVE CONDITIONS, DO NOT PROCEED WITH CONSTRUCTION OF AN ADU OR OTHER IMPROVEMENT UNDER THESE PLANS AT ALL.

project
City of Perris
Pre-Approved
ADU Program

revisions
01

description
Building
Sections
Craftsman

date 4 April 2025
project no. PERRIS PRADU
drawn by DESIGN PATH STUDIO
sheet no. A4.1

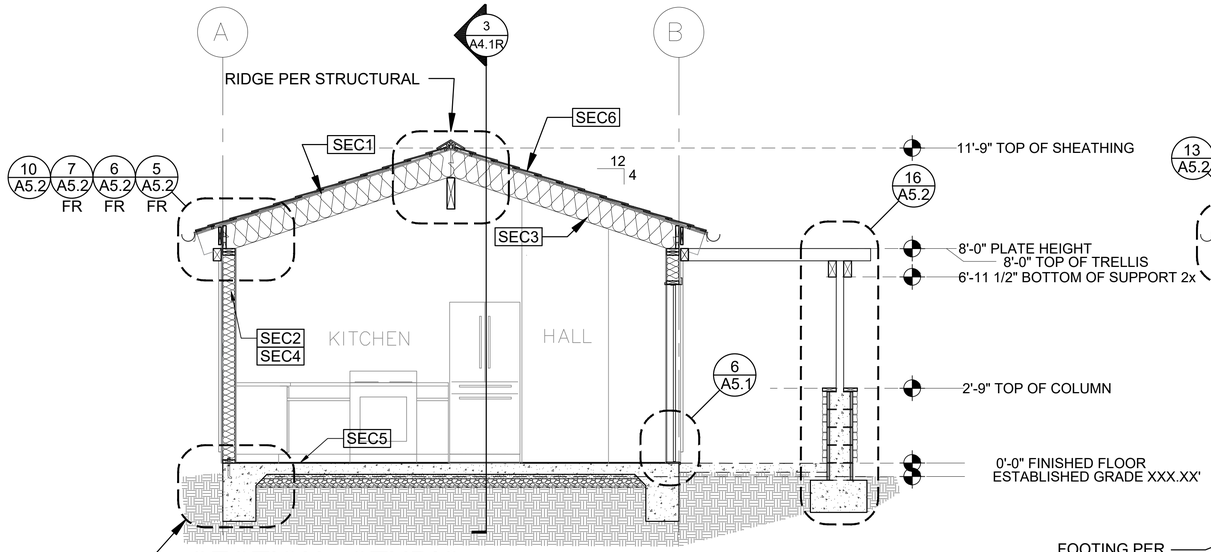

1 SECTION - STUDIO
3/8"=1'-0"
CRAFTSMAN - REVERSE

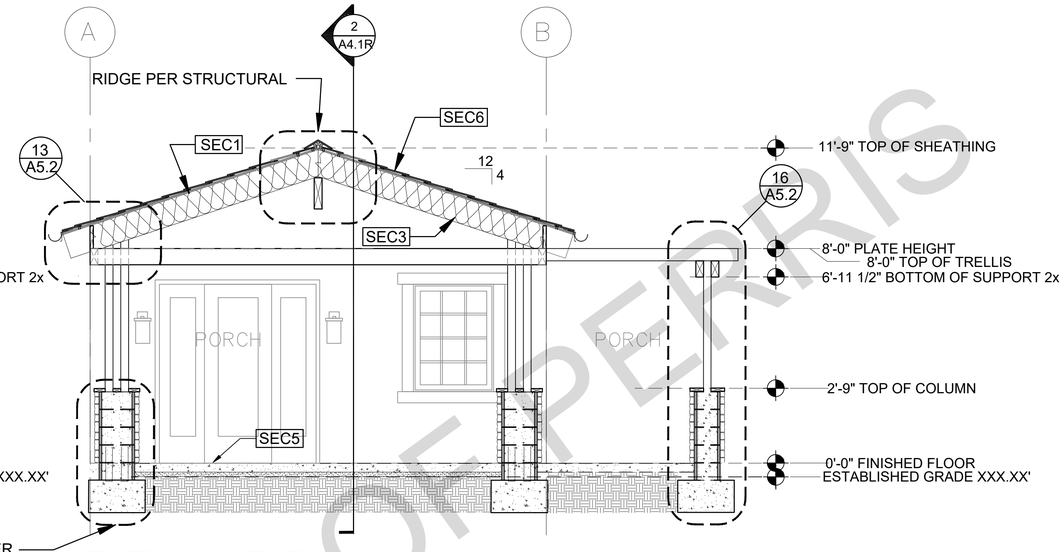

3 SECTION - STUDIO
3/8"=1'-0"
CRAFTSMAN - REVERSE

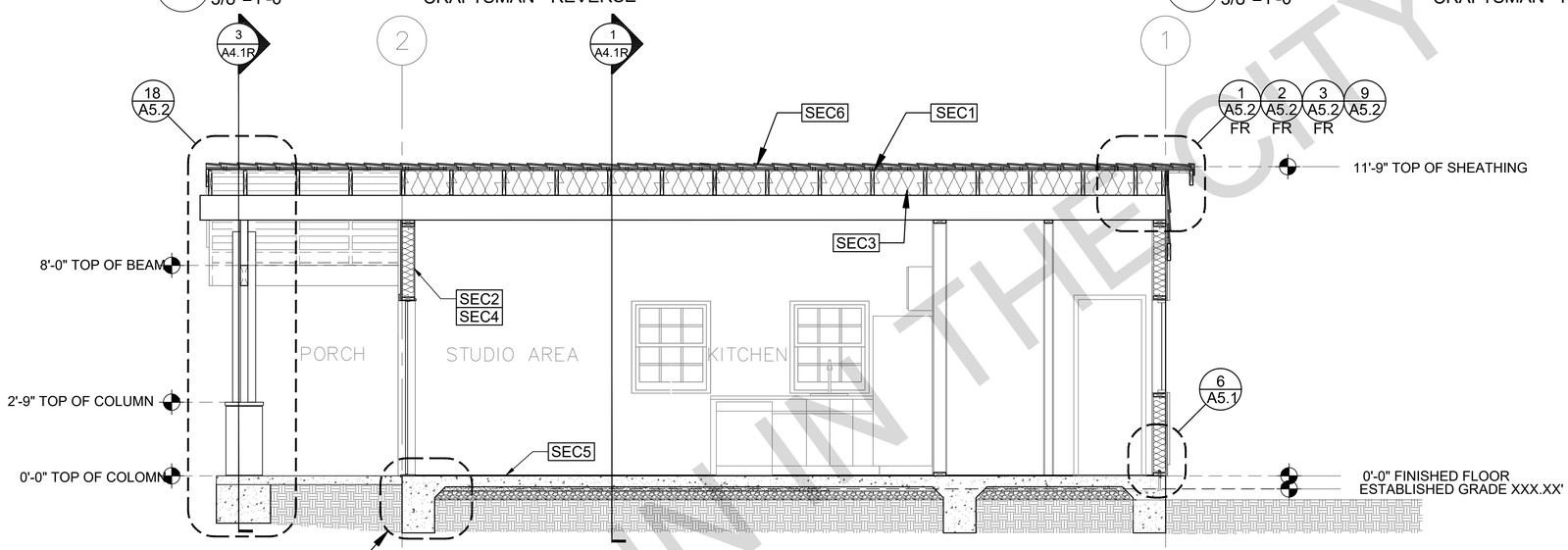

2 SECTION - STUDIO
3/8"=1'-0"
CRAFTSMAN - REVERSE

SECTION KEYNOTES

SEC1	RAFTERS PER PLAN SEE STRUCTURAL
SEC2	2X STUDS @ 16" O.C. - SEE STRUCTURAL
SEC3	CEILING INSULATION PER TITLE 24 ENERGY CALCULATIONS
SEC4	WALL INSULATION PER TITLE 24 ENERGY CALCULATIONS
SEC5	CONC. SLAB ON GRADE SEE STRUCTURAL
SEC6	MINIMUM CLASS A ROOF ASSEMBLY - SEE SHEET T1.1 FOR MANUFACTURER SPECIFICATIONS

SECTION GENERAL NOTES

1. METALS
SEE PLANS AND DETAILS FOR LOCATIONS, QUANTITY AND CONFIGURATION OF MISCELLANEOUS IRON AND STEEL WORK INCLUDING ASSORTED CLIPS, BRACKETS ANGLES, STRAPS, POST ANCHORS AND LIKE ITEMS.
FURNISH AND INSTALL ALL SUCH ITEMS NECESSARY TO MAKE A COMPLETE INSTILLATION WHETHER OR NOT SPECIFICALLY DETAILED OR NOTED ON THE DRAWINGS. ALL EXTERIOR METAL AND HARDWARE IS TO BE GALVANIZED. STEEL IS TO BE ASTM A3.

2. RAFTER VENTS ARE TO BE STAINLESS STEEL MESH AND ARE TO BE SIZED TO MEET REQUIRED VENTILATION TO ENCLOSED RAFTER SPACES. MAX ¼" MIN ¼" OPENING SIZE ON VENT SCREEN WITH CORROSION-RESISTANT WIRE SCREEN MATERIAL.

3. FRAMER IS TO LAYOUT CEILING JOISTS/ROOF RAFTERS TO ACCOMMODATE RECESSED LIGHTS EXHAUST FANS OR OTHER ELECTRICAL/MECHANICAL FIXTURES.

4. WOOD SOFFIT/CEILING, SIDING & TRIM
ALL NAILS, FASTENERS AND HARDWARE MUST BE STAINLESS STEEL OR HOT-DIPPED GALVANIZED. STAPLES ARE NOT PERMITTED

5. INSULATION
THERMAL INSULATION IS TO BE FOIL BACKED BATT INSULATION WITH AN R VALUE NOT LESS SPECIFIED IN THE TITLE 24 ENERGY CALCULATIONS. AT BATHROOMS, LAUNDRY ROOM , AND MASTER BED/BATHROOMS INSULATION IS TO BE PROVIDED WITH SOUND INSULATION,

6. FLASHING AND SHEET METAL
ALL FLASHING AND COUNTER FLASHING IS TO BE GALVANIZED AND INSTALLED AS PER SMACNA STANDARDS. ALL PROPOSED FLASHING AND SHEET METAL MATERIALS, GAUGE AND INSTALLATION IS TO BE IN ACCORDANCE WITH SMACNA MANUAL STANDARDS.

7. IN CONCEALED SPACES BETWEEN STAIR STRINGERS AT THE TOP AND BOTTOM OF THE RUN, ENCLOSED SPACES UNDER STAIRS SHALL COMPLY WITH SECTION R302.7.

8. THE PURPOSE OF THESE DRAWINGS IS TO SHOW CONSTRUCTION MATERIALS/ASSEMBLIES. FOR SPECIFIC SIZES AND DETAILS REFER TO ARCHITECTURAL PLANS, ELEVATIONS, DETAILS, & STRUCTURAL PLANS.
*KEYNOTES ONLY APPLY IF REFERNCED ON PLANS
1. INSULATION: REFER TO TITLE 24 REPORT FOR ADDITIONAL RATINGS, REQUIREMENTS, AND INFORMATION
2. FIRE BLOCKING TO BE LOCATED AT THE FOLLOWING LOCATIONS PER 2022 CRC SECTION R302.11:
A. SECTION R302.11:
1. FIREBLOCKING SHALL BE PROVIDED IN CONCEALED SPACES OF STUD WALLS AND PARTITIONS, INCLUDING FURRED SPACES AND PARALLEL ROWS OF STUDS OR STAGGERED STUDS, AS FOLLOWS:
A. VERTICALLY AT CEILING AND FLOOR LEVELS
B. HORIZONTALLY AT INTERVALS NOT EXCEEDING 10FT

9. AT INTERCONNECTIONS BETWEEN CONCEALED VERTICAL AND HORIZONTAL SPACES SUCH AS SOFFITS, DROP CEILINGS AND COVE CEILINGS

10. AT OPENINGS AROUND VENTS, PIPES, DUCTS, CABLES AND WIRES AT CEILINGS AND FLOOR LEVEL, WITH AN APPROVED MATERIAL TO RESIST THE FREE PASSAGE OF FLAME PRODUCTS OF COMBUSTION. THE MATERIAL FILLING THIS ANNULAR SPACE SHALL NOT BE REQUIRED TO MEET THE ASTM E136 REQUIREMENTS
FOR THE FIREBLOCKING OF CHIMNEYS AND FIREPLACES, SEE SECTION R1003.19
FIREBLOCKING OF CORNICES OF A TWO-FAMILY DWELLING IS REQUIRED AT THE LINE OF DWELLING-UNIT SEPARATION

11. SECTION R302.11.1 - FIREBLOCKING MATERIALS SHALL CONSIST OF FOLLOWING MATERIALS:
1. TWO-INCH NOMINAL NUMBER
2. TWO THICKNESS OF ONE-INCH NOMINAL LUMBER WITH BROKEN LAP JOINTS
3. THE THICKNESS OF 0.719-INCH WOOD STRUCTURAL PANELS WITH JOINTS BACKED BY 0.719-INCH WOOD STRUCTURAL PANELS
4. THE THICKNESS OF 0.75-INCH PARTICLE BOARD WITH JOINTS BACKED BY 0.75-INCH PARTICLE BOARD
5. ONE-HALF-INCH GYPSUM BOARD
6. ONE-FOURTH-INCH CEMENT-BASED MILLBOARD
7. BATTS OR BLANKETS OF MINERAL WOOL, MINERAL FIBER OR OTHER APPROVED MATERIAL INSTALLED IN SUCH A MANNER AS TO BE SECURELY RETAINED IN PLACE
8. CELLULOSE INSULATION INSTALLED AS TESTED IN ACCORDANCE WITH ASTM E119 OR UL 263, FOR THE SPECIFIC APPLICATION

LEGEND

SECTION CUT

ELEVATION CALLOUT

DETAIL DRAWING REF.

ELEVATION MARKER

FOR USE IN THE CITY OF PERRIS

DESIGN PATH STUDIO
architecture + engineering + planning
DESIGNPATHSTUDIO.COM

BY USING THESE PERMIT READY CONSTRUCTION DOCUMENTS, THE RECIPIENT ACKNOWLEDGES, ACCEPTS AND VOLUNTARILY AFFIRMS THE FOLLOWING CONDITIONS:
1. THE USE OF THIS INFORMATION IS RESTRICTED TO THE ORIGINAL PROJECT FOR WHICH IT WAS PREPARED FOR THE PERMIT READY ACCESSORY DWELLING UNIT (ADU) PROGRAM FOR THE CITY OF PERRIS ONLY. THIS IS A LIMITED SET OF STANDARDIZED ADU PLANS AND SPECIFICATIONS APPROVED BY THE CITY OF PERRIS BUILDING DEPARTMENT. BUILDING CODES DO CHANGE OVER TIME AND RECIPIENT SHALL ENSURE FULL COMPLIANCE UNDER ALL CODES THEN IN EFFECT AT THE TIME OF THE SUBJECT PERMIT. THIS DOES NOT ELIMINATE OR REDUCE THE RECIPIENT'S RESPONSIBILITY TO VERIFY ANY AND ALL INFORMATION RELEVANT TO THE RECIPIENT'S WORK AND RESPONSIBILITY ON THIS PROJECT. DESIGN PATH STUDIO SHALL NOT BE RESPONSIBLE FOR TRANSLATION ERRORS. DO NOT USE THESE CONSTRUCTION DOCUMENTS IF THE PERMIT HAS EXPIRED OR IS REVOKED AT ALL.
2. THE RECIPIENT RECOGNIZES AND ACKNOWLEDGES THAT THE USE OF THIS INFORMATION WILL BE AT THEIR SOLE RISK AND WITHOUT ANY LIABILITY OR LEGAL EXPOSURE TO DESIGN PATH STUDIO. NO WARRANTIES OF ANY NATURE, WHETHER EXPRESS OR IMPLIED, SHALL ATTACH TO THESE DOCUMENTS AND THE INFORMATION CONTAINED THEREON. ANY USE, REUSE, OR ALTERATION OF THESE DOCUMENTS BY THE RECIPIENT OR BY OTHERS WILL BE AT THE RECIPIENT'S RISK AND FULL LEGAL RESPONSIBILITY. FURTHERMORE, THE RECIPIENT WILL, TO THE FULLEST EXTENT PERMITTED BY LAW, DEFEND, INDEMNIFY AND HOLD DESIGN PATH STUDIO AND ITS ARCHITECTS HARMLESS FROM ANY AND ALL CLAIMS, SUITS, LIABILITY, DEMANDS, JUDGMENTS, OR COSTS ARISING OUT OF OR RESULTING THERE FROM ANY USE OF THESE CONSTRUCTION DOCUMENTS FOR OR ON ACCOUNT OF ANY INJURY, DEATH, DAMAGE OR LOSS TO PERSONS OR PROPERTY, DIRECT OR CONSEQUENTIAL DAMAGES IN ANY AMOUNT. THIS INDEMNITY DOES NOT APPLY TO THE SOLE NEGLIGENCE OR WILLFUL MISCONDUCT OF DESIGN PATH STUDIO OR ITS ARCHITECTS.
3. THE DESIGNS REPRESENTED BY THESE PLANS ARE COPYRIGHTED AND ARE SUBJECT TO COPYRIGHT PROTECTION.
4. IF THE RECIPIENT DOES NOT AGREE WITH THE ABOVE CONDITIONS, DO NOT PROCEED WITH CONSTRUCTION OF AN ADU OR OTHER IMPROVEMENT UNDER THESE PLANS AT ALL.

project
City of Perris
Pre-Approved
ADU Program

revisions
01

description
Building
Sections
Craftsman
Reverse

date 4 April 2025

project no. PERRIS PRADU

drawn by DESIGN PATH STUDIO

sheet no. A4.1R

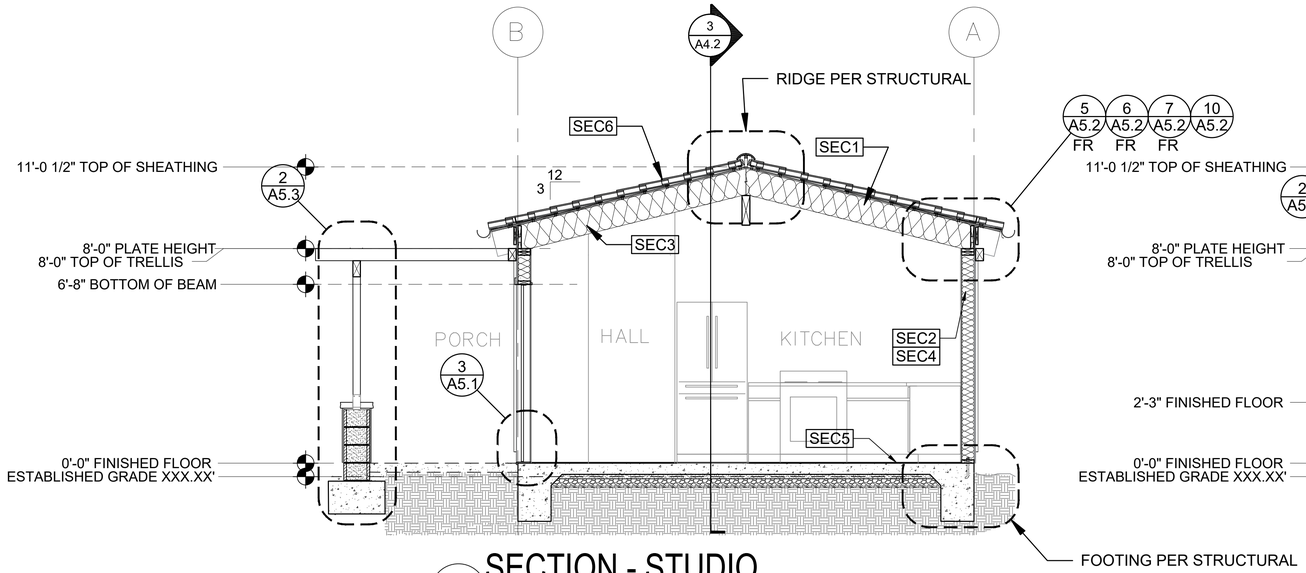

1 SECTION - STUDIO
3/8"=1'-0"
SPANISH

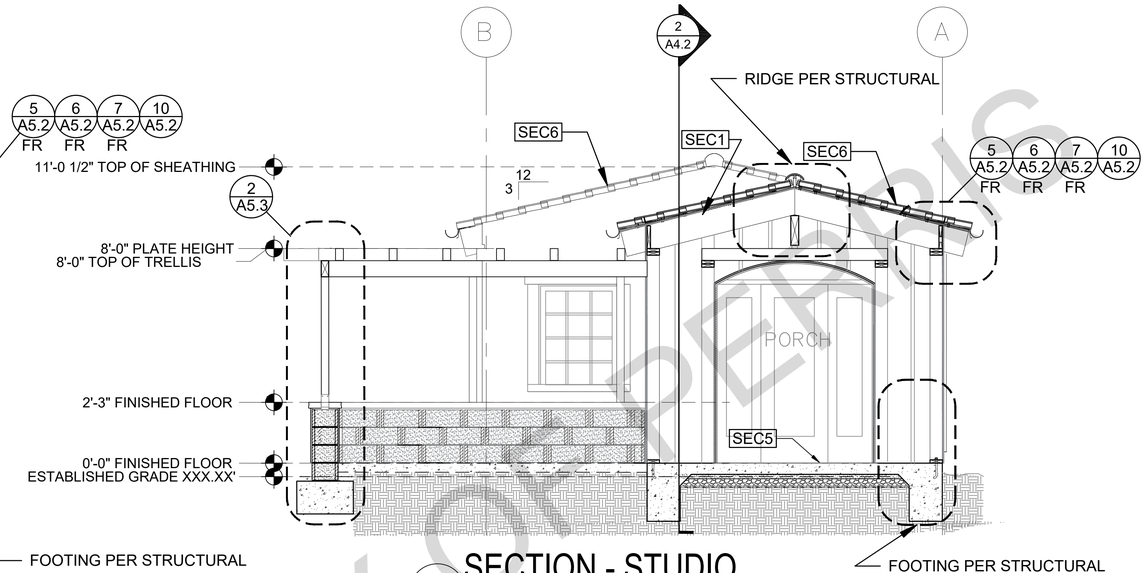

3 SECTION - STUDIO
3/8"=1'-0"
SPANISH

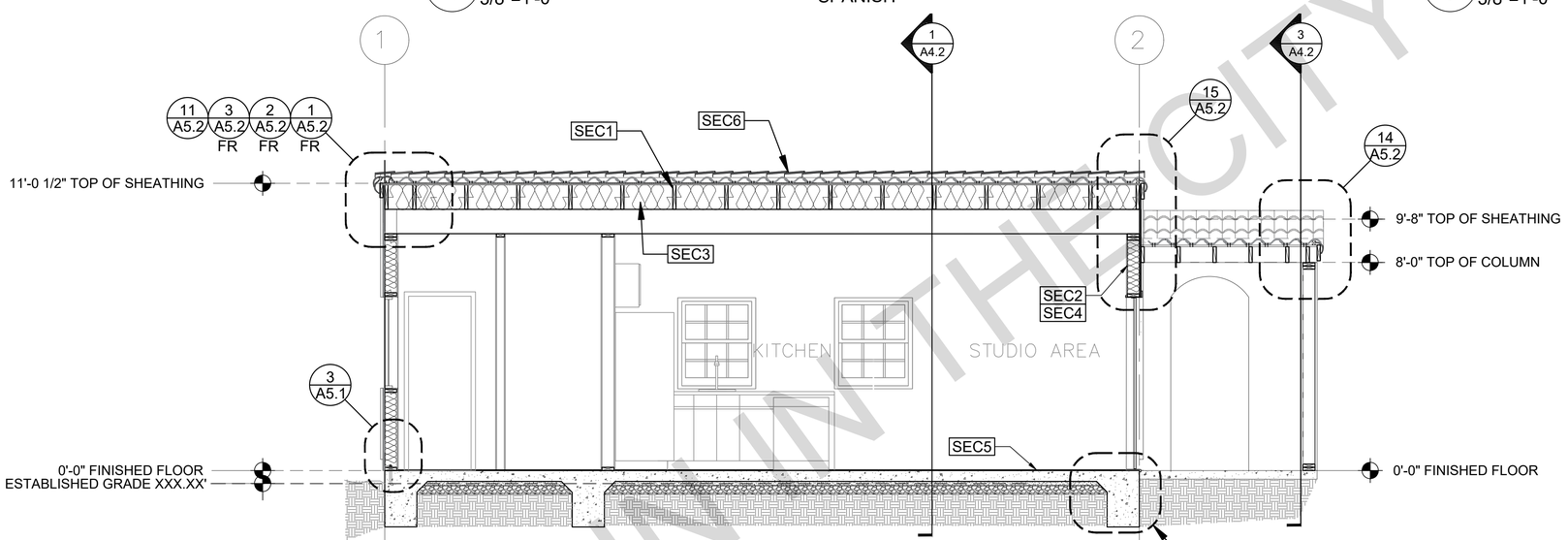

2 SECTION - STUDIO
3/8"=1'-0"
SPANISH

SECTION KEYNOTES

SEC1	RAFTERS PER PLAN SEE STRUCTURAL
SEC2	2X STUDS @ 16" O.C. - SEE STRUCTURAL
SEC3	CEILING INSULATION PER TITLE 24 ENERGY CALCULATIONS
SEC4	WALL INSULATION PER TITLE 24 ENERGY CALCULATIONS
SEC5	CONC. SLAB ON GRADE SEE STRUCTURAL
SEC6	MINIMUM CLASS A ROOF ASSEMBLY - SEE SHEET T1.1 FOR MANUFACTURER SPECIFICATIONS

SECTION GENERAL NOTES

1. METALS
SEE PLANS AND DETAILS FOR LOCATIONS, QUANTITY AND CONFIGURATION OF MISCELLANEOUS IRON AND STEEL WORK INCLUDING ASSORTED CLIPS, BRACKETS ANGLES, STRAPS, POST ANCHORS AND LIKE ITEMS.
FURNISH AND INSTALL ALL SUCH ITEMS NECESSARY TO MAKE A COMPLETE INSTILLATION WHETHER OR NOT SPECIFICALLY DETAILED OR NOTED ON THE DRAWINGS. ALL EXTERIOR METAL AND HARDWARE IS TO BE GALVANIZED. STEEL IS TO BE ASTM A3.

2. RAFTER VENTS ARE TO BE STAINLESS STEEL MESH AND ARE TO BE SIZED TO MEET REQUIRED VENTILATION TO ENCLOSED RAFTER SPACES. MAX ¼" MIN ¼" OPENING SIZE ON VENT SCREEN WITH CORROSION-RESISTANT WIRE SCREEN MATERIAL.

3. FRAMER IS TO LAYOUT CEILING JOISTS/ROOF RAFTERS TO ACCOMMODATE RECESSED LIGHTS EXHAUST FANS OR OTHER ELECTRICAL/MECHANICAL FIXTURES.

4. WOOD SOFFIT/CEILING, SIDING & TRIM
ALL NAILS, FASTENERS AND HARDWARE MUST BE STAINLESS STEEL OR HOT-DIPPED GALVANIZED. STAPLES ARE NOT PERMITTED

5. INSULATION
THERMAL INSULATION IS TO BE FOIL BACKED BATT INSULATION WITH AN R VALUE NOT LESS SPECIFIED IN THE TITLE 24 ENERGY CALCULATIONS. AT BATHROOMS, LAUNDRY ROOM , AND MASTER BED/BATHROOMS INSULATION IS TO BE PROVIDED WITH SOUND INSULATION,

6. FLASHING AND SHEET METAL
ALL FLASHING AND COUNTER FLASHING IS TO BE GALVANIZED AND INSTALLED AS PER SMACNA STANDARDS. ALL PROPOSED FLASHING AND SHEET METAL MATERIALS, GAUGE AND INSTALLATION IS TO BE IN ACCORDANCE WITH SMACNA MANUAL STANDARDS.

7. IN CONCEALED SPACES BETWEEN STAIR STRINGERS AT THE TOP AND BOTTOM OF THE RUN. ENCLOSED SPACES UNDER STAIRS SHALL COMPLY WITH SECTION R302.7.

8. THE PURPOSE OF THESE DRAWINGS IS TO SHOW CONSTRUCTION MATERIALS/ASSEMBLIES. FOR SPECIFIC SIZES AND DETAILS REFER TO ARCHITECTURAL PLANS, ELEVATIONS, DETAILS, & STRUCTURAL PLANS.
*KEYNOTES ONLY APPLY IF REFERNCED ON PLANS
1. INSULATION: REFER TO TITLE 24 REPORT FOR ADDITIONAL RATINGS, REQUIREMENTS, AND INFORMATION
2. FIRE BLOCKING TO BE LOCATED AT THE FOLLOWING LOCATIONS PER 2022 CRC SECTION R302.11:
A. SECTION R302.11:
1. FIREBLOCKING SHALL BE PROVIDED IN CONCEALED SPACES OF STUD WALLS AND PARTITIONS, INCLUDING FURRED SPACES AND PARALLEL ROWS OF STUDS OR STAGGERED STUDS, AS FOLLOWS:
A. VERTICALLY AT CEILING AND FLOOR LEVELS
B. HORIZONTALLY AT INTERVALS NOT EXCEEDING 10FT

9. AT INTERCONNECTIONS BETWEEN CONCEALED VERTICAL AND HORIZONTAL SPACES SUCH AS SOFFITS, DROP CEILINGS AND COVE CEILINGS

10. AT OPENINGS AROUND VENTS, PIPES, DUCTS, CABLES AND WIRES AT CEILINGS AND FLOOR LEVEL, WITH AN APPROVED MATERIAL TO RESIST THE FREE PASSAGE OF FLAME PRODUCTS OF COMBUSTION. THE MATERIAL FILLING THIS ANNULAR SPACE SHALL NOT BE REQUIRED TO MEET THE ASTM E136 REQUIREMENTS
FOR THE FIREBLOCKING OF CHIMNEYS AND FIREPLACES, SEE SECTION R1003.19
FIREBLOCKING OF CORNICES OF A TWO-FAMILY DWELLING IS REQUIRED AT THE LINE OF DWELLING-UNIT SEPARATION

11. SECTION R302.11.1 - FIREBLOCKING MATERIALS SHALL CONSIST OF FOLLOWING MATERIALS:
1. TWO-INCH NOMINAL NUMBER
2. TWO THICKNESS OF ONE-INCH NOMINAL LUMBER WITH BROKEN LAP JOINTS
3. THE THICKNESS OF 0.719-INCH WOOD STRUCTURAL PANELS WITH JOINTS BACKED BY 0.719-INCH WOOD STRUCTURAL PANELS
4. THE THICKNESS OF 0.75-INCH PARTICLE BOARD WITH JOINTS BACKED BY 0.75-INCH PARTICLE BOARD
5. ONE-HALF-INCH GYPSUM BOARD
6. ONE-FOURTH-INCH CEMENT-BASED MILLBOARD
7. BATTS OR BLANKETS OF MINERAL WOOL, MINERAL FIBER OR OTHER APPROVED MATERIAL INSTALLED IN SUCH A MANNER AS TO BE SECURELY RETAINED IN PLACE
8. CELLULOSE INSULATION INSTALLED AS TESTED IN ACCORDANCE WITH ASTM E119 OR UL 263, FOR THE SPECIFIC APPLICATION

LEGEND

SECTION CUT
ELEVATION CALLOUT
DETAIL DRAWING REF.
X-X" ELEVATION MARKER

FOR USE IN IN THE CITY OF PERRIS

DESIGN PATH STUDIO
architecture + engineering + planning
DESIGNPATHSTUDIO.COM

BY USING THESE PERMIT READY CONSTRUCTION DOCUMENTS, THE RECIPIENT ACKNOWLEDGES, ACCEPTS AND VOLUNTARILY AFFIRMS THE FOLLOWING CONDITIONS:
1. THE USE OF THIS INFORMATION IS RESTRICTED TO THE ORIGINAL PROJECT FOR WHICH IT WAS PREPARED FOR THE PERMIT READY ACCESSORY DWELLING UNIT (ADU) PROGRAM FOR THE CITY OF PERRIS ONLY. THIS IS A LIMITED SET OF STANDARDIZED ADU PLANS AND SPECIFICATIONS APPROVED BY THE CITY OF PERRIS BUILDING DEPARTMENT. BUILDING CODES DO CHANGE OVER TIME AND RECIPIENT SHALL ENSURE FULL COMPLIANCE UNDER ALL CODES THEN IN EFFECT AT THE TIME OF THE SUBJECT PERMIT. THIS DOES NOT ELIMINATE OR REDUCE THE RECIPIENT'S RESPONSIBILITY TO VERIFY ANY AND ALL INFORMATION RELEVANT TO THE RECIPIENT'S WORK AND RESPONSIBILITY ON THIS PROJECT. DESIGN PATH STUDIO SHALL NOT BE RESPONSIBLE FOR TRANSLATION ERRORS. DO NOT USE THESE CONSTRUCTION DOCUMENTS IF THE PERMIT HAS EXPIRED OR IS REVOKED AT ALL.
2. THE RECIPIENT RECOGNIZES AND ACKNOWLEDGES THAT THE USE OF THIS INFORMATION WILL BE AT THEIR SOLE RISK AND WITHOUT ANY LIABILITY OR LEGAL EXPOSURE TO DESIGN PATH STUDIO. NO WARRANTIES OF ANY NATURE, WHETHER EXPRESS OR IMPLIED, SHALL ATTACH TO THESE DOCUMENTS AND THE INFORMATION CONTAINED THEREON. ANY USE, REUSE, OR ALTERATION OF THESE DOCUMENTS BY THE RECIPIENT OR BY OTHERS WILL BE AT THE RECIPIENT'S RISK AND FULL LEGAL RESPONSIBILITY. FURTHERMORE, THE RECIPIENT WILL, TO THE FULLEST EXTENT PERMITTED BY LAW, DEFEND, INDEMNIFY AND HOLD DESIGN PATH STUDIO AND ITS ARCHITECTS HARMLESS FROM ANY AND ALL CLAIMS, SUITS, LIABILITY, DEMANDS, JUDGMENTS, OR COSTS ARISING OUT OF OR RESULTING THERE FROM ANY USE OF THESE CONSTRUCTION DOCUMENTS FOR OR ON ACCOUNT OF ANY INJURY, DEATH, DAMAGE OR LOSS TO PERSONS OR PROPERTY, DIRECT OR CONSEQUENTIAL DAMAGES IN ANY AMOUNT. THIS INDEMNITY DOES NOT APPLY TO THE SOLE NEGLIGENCE OR WILLFUL MISCONDUCT OF DESIGN PATH STUDIO OR ITS ARCHITECTS.
3. THE DESIGNS REPRESENTED BY THESE PLANS ARE COPYRIGHTED AND ARE SUBJECT TO COPYRIGHT PROTECTION.
4. IF THE RECIPIENT DOES NOT AGREE WITH THE ABOVE CONDITIONS, DO NOT PROCEED WITH CONSTRUCTION OF AN ADU OR OTHER IMPROVEMENT UNDER THESE PLANS AT ALL.

project
City of Perris
Pre-Approved
ADU Program

revisions
01

description
Building
Sections
Spanish

date 4 April 2025
project no. PERRIS PRADU
drawn by DESIGN PATH STUDIO
sheet no. A4.2

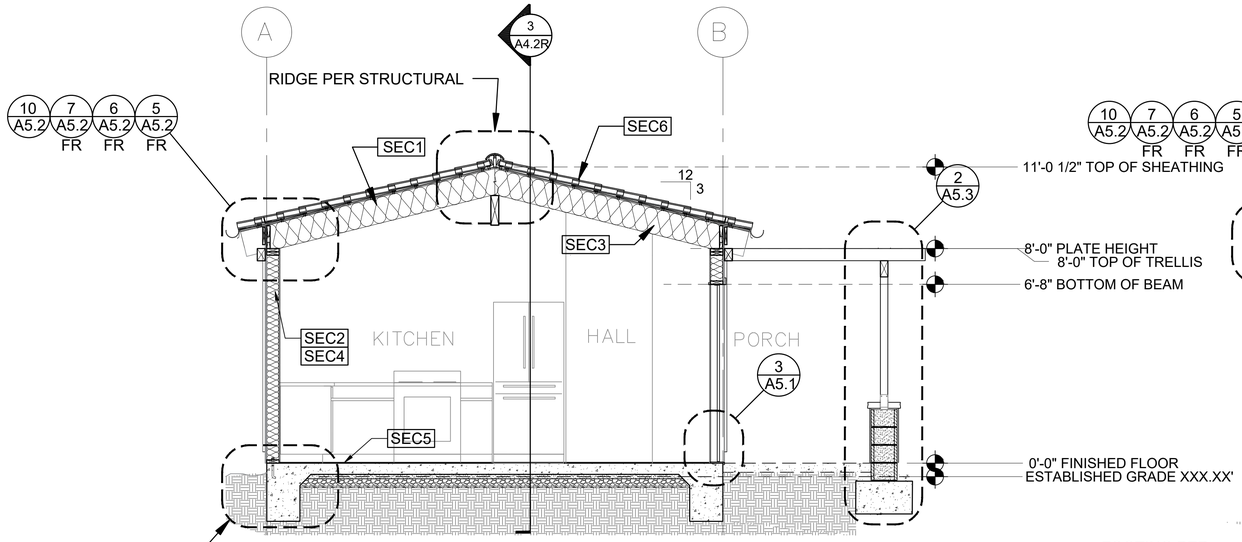

1 SECTION - STUDIO
3/8"=1'-0"
SPANISH - REVERSE

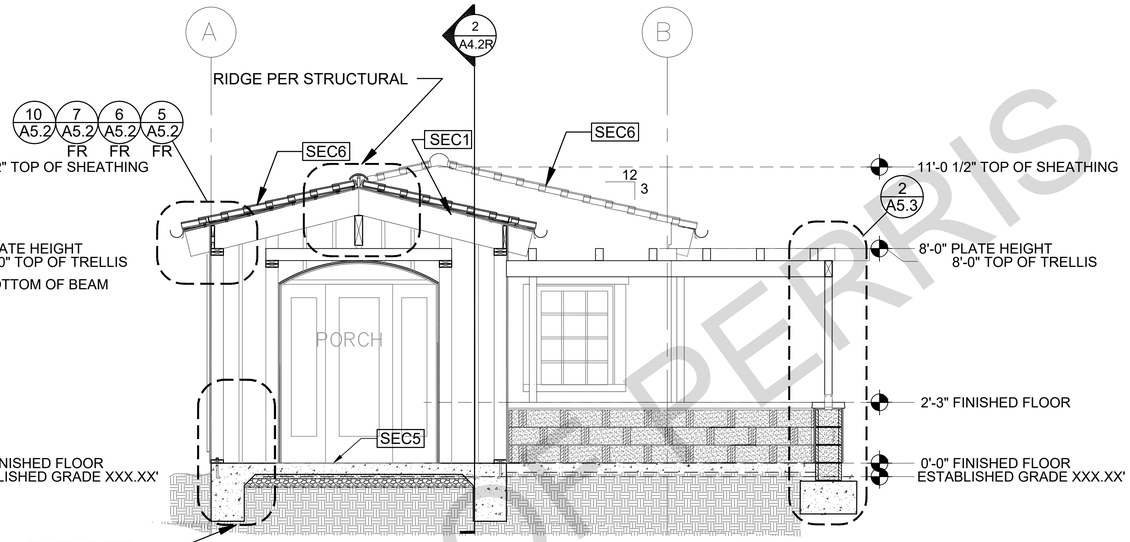

3 SECTION - STUDIO
3/8"=1'-0"
SPANISH - REVERSE

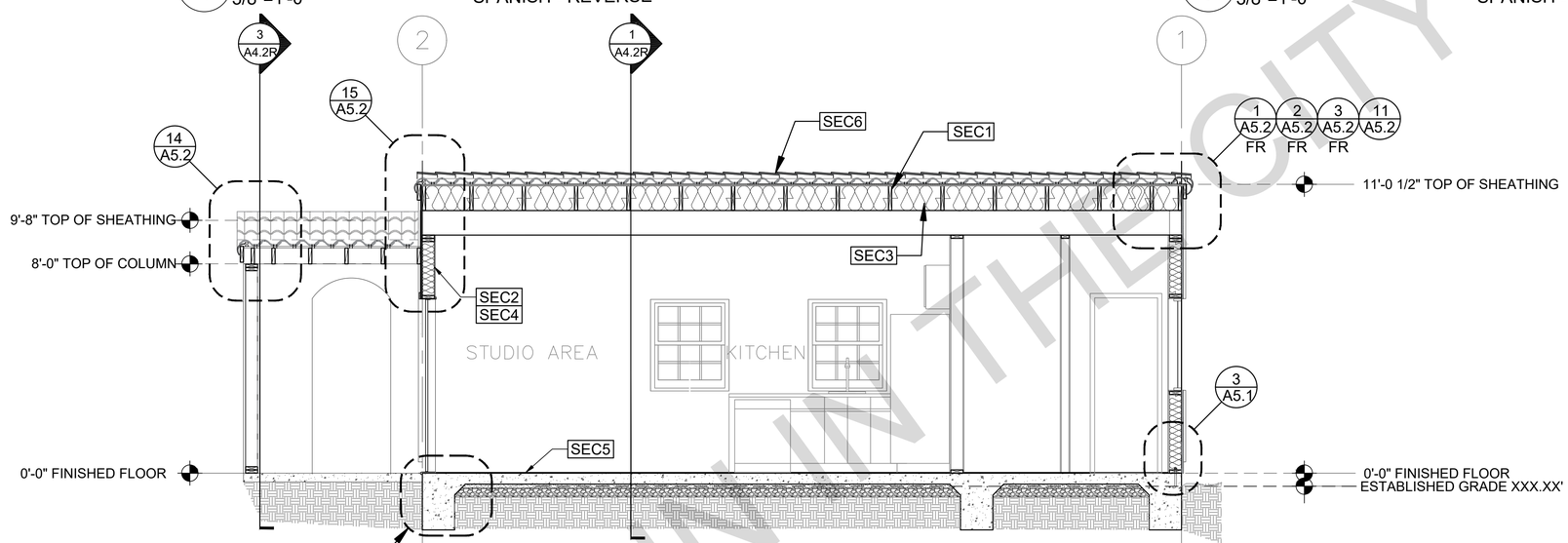

2 SECTION - STUDIO
3/8"=1'-0"
SPANISH - REVERSE

SECTION KEYNOTES

SEC1	RAFTERS PER PLAN SEE STRUCTURAL
SEC2	2X STUDS @ 16" O.C. - SEE STRUCTURAL
SEC3	CEILING INSULATION PER TITLE 24 ENERGY CALCULATIONS
SEC4	WALL INSULATION PER TITLE 24 ENERGY CALCULATIONS
SEC5	CONC. SLAB ON GRADE SEE STRUCTURAL
SEC6	MINIMUM CLASS A ROOF ASSEMBLY - SEE SHEET T1.1 FOR MANUFACTURER SPECIFICATIONS

SECTION GENERAL NOTES

1. METALS
SEE PLANS AND DETAILS FOR LOCATIONS, QUANTITY AND CONFIGURATION OF MISCELLANEOUS IRON AND STEEL WORK INCLUDING ASSORTED CLIPS, BRACKETS ANGLES, STRAPS, POST ANCHORS AND LIKE ITEMS.
FURNISH AND INSTALL ALL SUCH ITEMS NECESSARY TO MAKE A COMPLETE INSTILLATION WHETHER OR NOT SPECIFICALLY DETAILED OR NOTED ON THE DRAWINGS. ALL EXTERIOR METAL AND HARDWARE IS TO BE GALVANIZED. STEEL IS TO BE ASTM A3.

2. RAFTER VENTS ARE TO BE STAINLESS STEEL MESH AND ARE TO BE SIZED TO MEET REQUIRED VENTILATION TO ENCLOSED RAFTER SPACES. MAX ¼" MIN¼" OPENING SIZE ON VENT SCREEN WITH CORROSION-RESISTANT WIRE SCREEN MATERIAL.

3. FRAMER IS TO LAYOUT CEILING JOISTS/ROOF RAFTERS TO ACCOMMODATE RECESSED LIGHTS EXHAUST FANS OR OTHER ELECTRICAL/MECHANICAL FIXTURES.

4. WOOD SOFFIT/CEILING, SIDING & TRIM
ALL NAILS, FASTENERS AND HARDWARE MUST BE STAINLESS STEEL OR HOT-DIPPED GALVANIZED. STAPLES ARE NOT PERMITTED

5. INSULATION
THERMAL INSULATION IS TO BE FOIL BACKED BATT INSULATION WITH AN R VALUE NOT LESS SPECIFIED IN THE TITLE 24 ENERGY CALCULATIONS. AT BATHROOMS, LAUNDRY ROOM , AND MASTER BED/BATHROOMS INSULATION IS TO BE PROVIDED WITH SOUND INSULATION,

6. FLASHING AND SHEET METAL
ALL FLASHING AND COUNTER FLASHING IS TO BE GALVANIZED AND INSTALLED AS PER SMACNA STANDARDS. ALL PROPOSED FLASHING AND SHEET METAL MATERIALS, GAUGE AND INSTALLATION IS TO BE IN ACCORDANCE WITH SMACNA MANUAL STANDARDS.

7. IN CONCEALED SPACES BETWEEN STAIR STRINGERS AT THE TOP AND BOTTOM OF THE RUN. ENCLOSED SPACES UNDER STAIRS SHALL COMPLY WITH SECTION R302.7.

8. THE PURPOSE OF THESE DRAWINGS IS TO SHOW CONSTRUCTION MATERIALS/ASSEMBLIES. FOR SPECIFIC SIZES AND DETAILS REFER TO ARCHITECTURAL PLANS, ELEVATIONS, DETAILS, & STRUCTURAL PLANS.
*KEYNOTES ONLY APPLY IF REFERNCED ON PLANS
1. INSULATION: REFER TO TITLE 24 REPORT FOR ADDITIONAL RATINGS, REQUIREMENTS, AND INFORMATION
2. FIRE BLOCKING TO BE LOCATED AT THE FOLLOWING LOCATIONS PER 2022 CRC SECTION R302.11:
A. SECTION R302.11:
1. FIREBLOCKING SHALL BE PROVIDED IN CONCEALED SPACES OF STUD WALLS AND PARTITIONS, INCLUDING FURRED SPACES AND PARALLEL ROWS OF STUDS OR STAGGERED STUDS, AS FOLLOWS:
A. VERTICALLY AT CEILING AND FLOOR LEVELS
B. HORIZONTALLY AT INTERVALS NOT EXCEEDING 10FT

9. AT INTERCONNECTIONS BETWEEN CONCEALED VERTICAL AND HORIZONTAL SPACES SUCH AS SOFFITS, DROP CEILINGS AND COVE CEILINGS

10. AT OPENINGS AROUND VENTS, PIPES, DUCTS, CABLES AND WIRES AT CEILINGS AND FLOOR LEVEL, WITH AN APPROVED MATERIAL TO RESIST THE FREE PASSAGE OF FLAME PRODUCTS OF COMBUSTION. THE MATERIAL FILLING THIS ANNULAR SPACE SHALL NOT BE REQUIRED TO MEET THE ASTM E136 REQUIREMENTS
FOR THE FIREBLOCKING OF CHIMNEYS AND FIREPLACES, SEE SECTION R1003.19
FIREBLOCKING OF CORNICES OF A TWO-FAMILY DWELLING IS REQUIRED AT THE LINE OF DWELLING-UNIT SEPARATION

11. SECTION R302.11.1 - FIREBLOCKING MATERIALS SHALL CONSIST OF FOLLOWING MATERIALS:
1. TWO-INCH NOMINAL NUMBER
2. TWO THICKNESS OF ONE-INCH NOMINAL LUMBER WITH BROKEN LAP JOINTS
3. THE THICKNESS OF 0.719-INCH WOOD STRUCTURAL PANELS WITH JOINTS BACKED BY 0.719-INCH WOOD STRUCTURAL PANELS
4. THE THICKNESS OF 0.75-INCH PARTICLE BOARD WITH JOINTS BACKED BY 0.75-INCH PARTICLE BOARD
5. ONE-HALF-INCH GYPSUM BOARD
6. ONE-FOURTH-INCH CEMENT-BASED MILLBOARD
7. BATTS OR BLANKETS OF MINERAL WOOL, MINERAL FIBER OR OTHER APPROVED MATERIAL INSTALLED IN SUCH A MANNER AS TO BE SECURELY RETAINED IN PLACE
8. CELLULOSE INSULATION INSTALLED AS TESTED IN ACCORDANCE WITH ASTM E119 OR UL 263, FOR THE SPECIFIC APPLICATION

LEGEND

SECTION CUT
ELEVATION CALLOUT
DETAIL DRAWING REF.
X-X" ELEVATION MARKER

FOR USE IN IN THE CITY OF PERRIS

DESIGN PATH STUDIO
architecture + engineering + planning
DESIGNPATHSTUDIO.COM

BY USING THESE PERMIT READY CONSTRUCTION DOCUMENTS, THE RECIPIENT ACKNOWLEDGES, ACCEPTS AND VOLUNTARILY AFFIRMS THE FOLLOWING CONDITIONS:
1. THE USE OF THIS INFORMATION IS RESTRICTED TO THE ORIGINAL PROJECT FOR WHICH IT WAS PREPARED FOR THE PERMIT READY ACCESSORY DWELLING UNIT (ADU) PROGRAM FOR THE CITY OF PERRIS ONLY. THIS IS A LIMITED SET OF STANDARDIZED ADU PLANS AND SPECIFICATIONS APPROVED BY THE CITY OF PERRIS BUILDING DEPARTMENT. BUILDING CODES DO CHANGE OVER TIME AND RECIPIENT SHALL ENSURE FULL COMPLIANCE UNDER ALL CODES THEN IN EFFECT AT THE TIME OF THE SUBJECT PERMIT. THIS DOES NOT ELIMINATE OR REDUCE THE RECIPIENT'S RESPONSIBILITY TO VERIFY ANY AND ALL INFORMATION RELEVANT TO THE RECIPIENT'S WORK AND RESPONSIBILITY ON THIS PROJECT. DESIGN PATH STUDIO SHALL NOT BE RESPONSIBLE FOR TRANSLATION ERRORS. DO NOT USE THESE CONSTRUCTION DOCUMENTS IF THE PERMIT HAS EXPIRED OR IS REVOKED AT ALL.
2. THE RECIPIENT RECOGNIZES AND ACKNOWLEDGES THAT THE USE OF THIS INFORMATION WILL BE AT THEIR SOLE RISK AND WITHOUT ANY LIABILITY OR LEGAL EXPOSURE TO DESIGN PATH STUDIO. NO WARRANTIES OF ANY NATURE, WHETHER EXPRESS OR IMPLIED, SHALL ATTACH TO THESE DOCUMENTS AND THE INFORMATION CONTAINED THEREON. ANY USE, REUSE, OR ALTERATION OF THESE DOCUMENTS BY THE RECIPIENT OR BY OTHERS WILL BE AT THE RECIPIENT'S RISK AND FULL LEGAL RESPONSIBILITY. FURTHERMORE, THE RECIPIENT WILL, TO THE FULLEST EXTENT PERMITTED BY LAW, DEFEND, INDEMNIFY AND HOLD DESIGN PATH STUDIO AND ITS ARCHITECTS HARMLESS FROM ANY AND ALL CLAIMS, SUITS, LIABILITY, DEMANDS, JUDGMENTS, OR COSTS ARISING OUT OF OR RESULTING THERE FROM ANY USE OF THESE CONSTRUCTION DOCUMENTS FOR OR ON ACCOUNT OF ANY INJURY, DEATH, DAMAGE OR LOSS TO PERSONS OR PROPERTY, DIRECT OR CONSEQUENTIAL DAMAGES IN ANY AMOUNT. THIS INDEMNITY DOES NOT APPLY TO THE SOLE NEGLIGENCE OR WILLFUL MISCONDUCT OF DESIGN PATH STUDIO OR ITS ARCHITECTS.
3. THE DESIGNS REPRESENTED BY THESE PLANS ARE COPYRIGHTED AND ARE SUBJECT TO COPYRIGHT PROTECTION.
4. IF THE RECIPIENT DOES NOT AGREE WITH THE ABOVE CONDITIONS, DO NOT PROCEED WITH CONSTRUCTION OF AN ADU OR OTHER IMPROVEMENT UNDER THESE PLANS AT ALL.

project
City of Perris
Pre-Approved
ADU Program

revisions
1

description
Building
Sections
Spanish
Reverse

date 4 April 2025

project no. PERRIS PRADU

drawn by DESIGN PATH STUDIO

sheet no. A4.2R

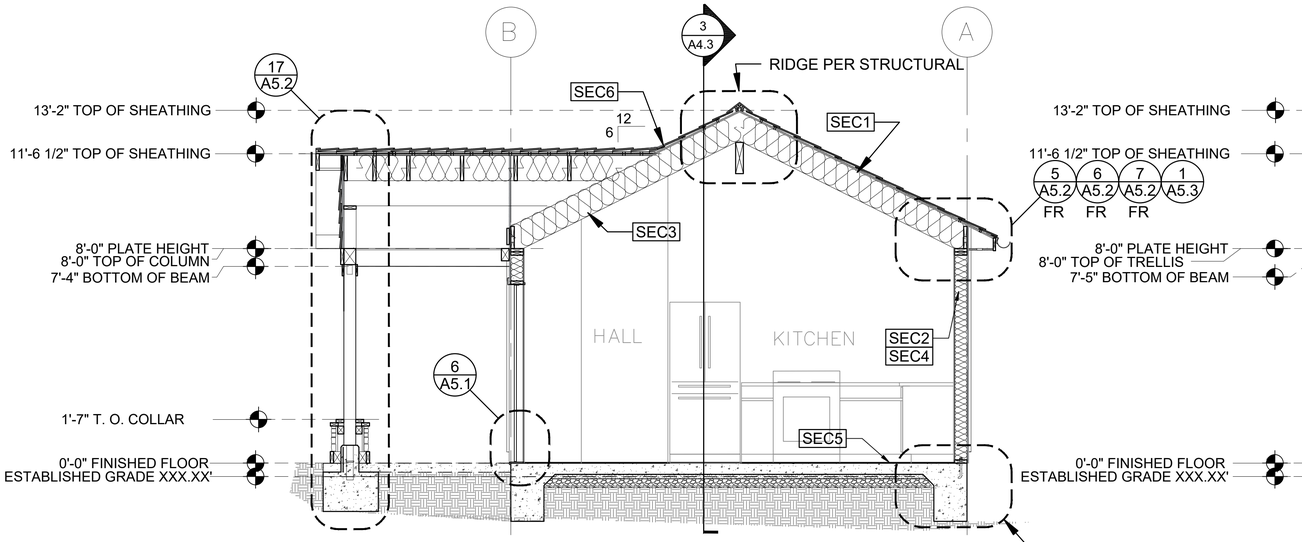

1 SECTION - STUDIO
3/8"=1'-0"
TRADITIONAL

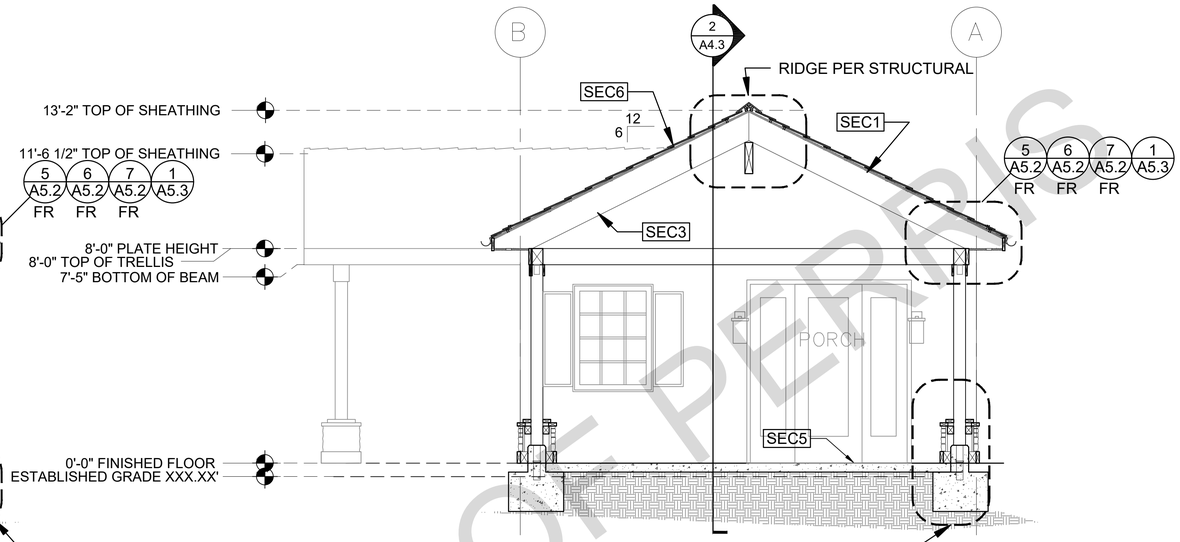

3 SECTION - STUDIO
3/8"=1'-0"
TRADITIONAL

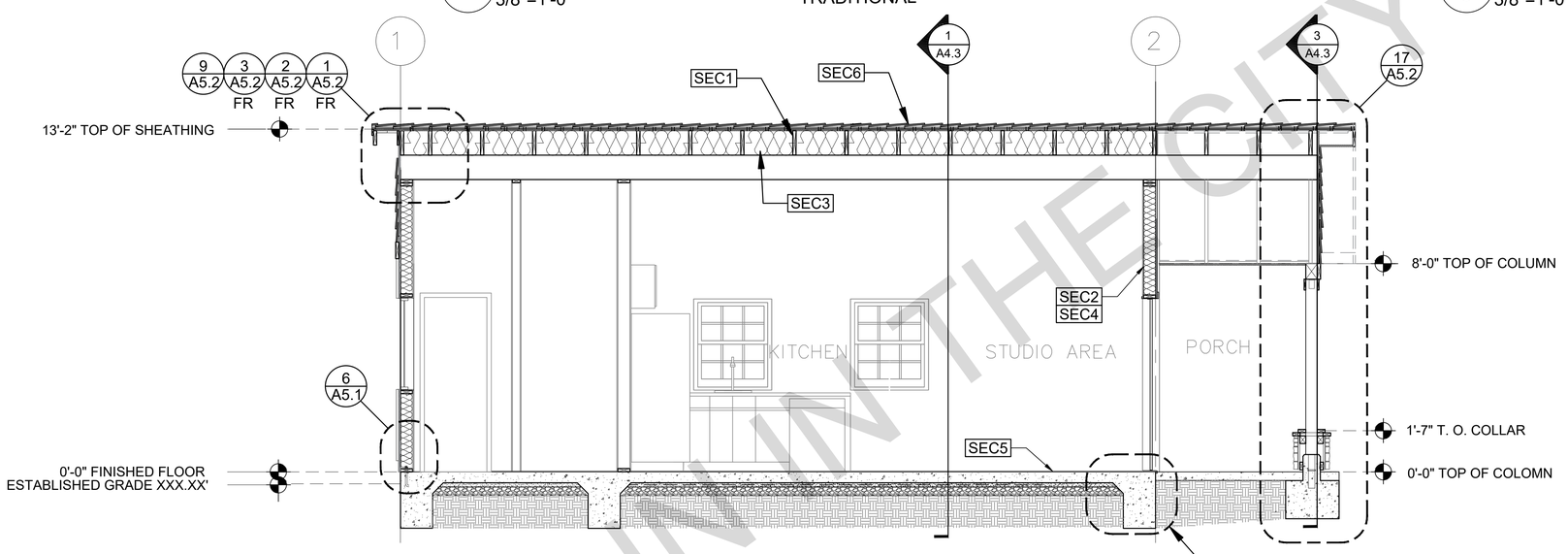

2 SECTION - STUDIO
3/8"=1'-0"
TRADITIONAL

SECTION KEYNOTES

SEC1	RAFTERS PER PLAN SEE STRUCTURAL
SEC2	2X STUDS @ 16" O.C. - SEE STRUCTURAL
SEC3	CEILING INSULATION PER TITLE 24 ENERGY CALCULATIONS
SEC4	WALL INSULATION PER TITLE 24 ENERGY CALCULATIONS
SEC5	CONC. SLAB ON GRADE SEE STRUCTURAL
SEC6	MINIMUM CLASS A ROOF ASSEMBLY - SEE SHEET T1.1 FOR MANUFACTURER SPECIFICATIONS

SECTION GENERAL NOTES

1. METALS
SEE PLANS AND DETAILS FOR LOCATIONS, QUANTITY AND CONFIGURATION OF MISCELLANEOUS IRON AND STEEL WORK INCLUDING ASSORTED CLIPS, BRACKETS ANGLES, STRAPS, POST ANCHORS AND LIKE ITEMS.
FURNISH AND INSTALL ALL SUCH ITEMS NECESSARY TO MAKE A COMPLETE
INSTILLATION WHETHER OR NOT SPECIFICALLY DETAILED OR NOTED ON THE
DRAWINGS. ALL EXTERIOR METAL AND HARDWARE IS TO BE GALVANIZED. STEEL IS TO BE
ASTM A3.

2. RAFTER VENTS ARE TO BE STAINLESS STEEL MESH AND ARE TO BE SIZED TO MEET REQUIRED VENTILATION TO ENCLOSED RAFTER SPACES. MAX ¼" MIN ¼" OPENING SIZE ON VENT SCREEN WITH CORROSION-RESISTANT WIRE SCREEN MATERIAL.

3. FRAMER IS TO LAYOUT CEILING JOISTS/ROOF RAFTERS TO ACCOMMODATE RECESSED LIGHTS EXHAUST FANS OR OTHER ELECTRICAL/MECHANICAL FIXTURES.

4. WOOD SOFFIT/CEILING, SIDING & TRIM
ALL NAILS, FASTENERS AND HARDWARE MUST BE STAINLESS STEEL OR HOT-DIPPED GALVANIZED. STAPLES ARE NOT PERMITTED

5. INSULATION
THERMAL INSULATION IS TO BE FOIL BACKED BATT INSULATION WITH AN R VALUE NOT LESS SPECIFIED IN THE TITLE 24 ENERGY CALCULATIONS. AT BATHROOMS, LAUNDRY ROOM , AND MASTER BED/BATHROOMS INSULATION IS TO
BE PROVIDED WITH SOUND INSULATION,

6. FLASHING AND SHEET METAL
ALL FLASHING AND COUNTER FLASHING IS TO BE GALVANIZED AND INSTALLED AS PER SMACNA STANDARDS. ALL PROPOSED FLASHING AND SHEET METAL MATERIALS, GAUGE AND INSTALLATION IS TO BE IN ACCORDANCE WITH SMACNA MANUAL STANDARDS.

7. IN CONCEALED SPACES BETWEEN STAIR STRINGERS AT THE TOP AND BOTTOM OF THE RUN, ENCLOSED SPACES UNDER STAIRS SHALL COMPLY WITH SECTION R302.7.

8. THE PURPOSE OF THESE DRAWINGS IS TO SHOW CONSTRUCTION MATERIALS/ASSEMBLIES. FOR SPECIFIC SIZES AND DETAILS REFER TO ARCHITECTURAL PLANS, ELEVATIONS, DETAILS, & STRUCTURAL PLANS.
*KEYNOTES ONLY APPLY IF REFERNCED ON PLANS
1. INSULATION: REFER TO TITLE 24 REPORT FOR ADDITIONAL RATINGS, REQUIREMENTS, AND INFORMATION
2. FIRE BLOCKING TO BE LOCATED AT THE FOLLOWING LOCATIONS PER 2022 CRC: SECTION R302.11:
A. SECTION R302.11-
1. FIREBLOCKING SHALL BE PROVIDED IN CONCEALED SPACES OF STUD WALLS AND PARTITIONS, INCLUDING FURRED SPACES AND PARALLEL ROWS OF STUDS OR STAGGERED STUDS, AS FOLLOWS:
A. VERTICALLY AT CEILING AND FLOOR LEVELS
B. HORIZONTALLY AT INTERVALS NOT EXCEEDING 10FT

9. AT INTERCONNECTIONS BETWEEN CONCEALED VERTICAL AND HORIZONTAL SPACES SUCH AS SOFFITS, DROP CEILINGS AND COVE CEILINGS

10. AT OPENINGS AROUND VENTS, PIPES, DUCTS, CABLES AND WIRES AT CEILINGS AND FLOOR LEVEL, WITH AN APPROVED MATERIAL TO RESIST THE FREE PASSAGE OF FLAME PRODUCTS OF COMBUSTION. THE MATERIAL FILLING THIS ANNULAR SPACE SHALL NOT BE REQUIRED TO MEET THE ASTM E136 REQUIREMENTS
FOR THE FIREBLOCKING OF CHIMNEYS AND FIREPLACES, SEE SECTION R1003.19
FIREBLOCKING OF CORNICES OF A TWO-FAMILY DWELLING IS REQUIRED AT THE LINE OF DWELLING-UNIT SEPARATION

11. SECTION R302.11.1 - FIREBLOCKING MATERIALS SHALL CONSIST OF FOLLOWING MATERIALS:
1. TWO-INCH NOMINAL NUMBER
2. TWO THICKNESS OF ONE-INCH NOMINAL LUMBER WITH BROKEN LAP JOINTS
3. THE THICKNESS OF 0.719-INCH WOOD STRUCTURAL PANELS WITH JOINTS BACKED BY 0.719-INCH WOOD STRUCTURAL PANELS
4. THE THICKNESS OF 0.75-INCH PARTICLE BOARD WITH JOINTS BACKED BY 0.75-INCH PARTICLE BOARD
5. ONE-HALF-INCH GYPSUM BOARD
6. ONE-FOURTH-INCH CEMENT-BASED MILLBOARD
7. BATTS OR BLANKETS OF MINERAL WOOL, MINERAL FIBER OR OTHER APPROVED MATERIAL INSTALLED IN SUCH A MANNER AS TO BE SECURELY RETAINED IN PLACE
8. CELLULOSE INSULATION INSTALLED AS TESTED IN ACCORDANCE WITH ASTM E119 OR UL 263, FOR THE SPECIFIC APPLICATION

LEGEND

SECTION CUT
ELEVATION CALLOUT
DETAIL DRAWING REF.
X-X" ELEVATION MARKER

FOR USE IN THE CITY OF PERRIS

DESIGN PATH STUDIO
architecture + engineering + planning
DESIGNPATHSTUDIO.COM

BY USING THESE PERMIT READY CONSTRUCTION DOCUMENTS, THE RECIPIENT ACKNOWLEDGES, ACCEPTS AND VOLUNTARILY AFFIRMS THE FOLLOWING CONDITIONS:
1. THE USE OF THIS INFORMATION IS RESTRICTED TO THE ORIGINAL PROJECT FOR WHICH IT WAS PREPARED FOR THE PERMIT READY ACCESSORY DWELLING UNIT (ADU) PROGRAM FOR THE CITY OF PERRIS ONLY. THIS IS A LIMITED SET OF STANDARDIZED ADU PLANS AND SPECIFICATIONS APPROVED BY THE CITY OF PERRIS BUILDING DEPARTMENT. BUILDING CODES DO CHANGE OVER TIME AND RECIPIENT SHALL ENSURE FULL COMPLIANCE UNDER ALL CODES THEN IN EFFECT AT THE TIME OF THE SUBJECT PERMIT. THIS DOES NOT ELIMINATE OR REDUCE THE RECIPIENT'S RESPONSIBILITY TO VERIFY ANY AND ALL INFORMATION RELEVANT TO THE RECIPIENT'S WORK AND RESPONSIBILITY ON THIS PROJECT. DESIGN PATH STUDIO SHALL NOT BE RESPONSIBLE FOR TRANSLATION ERRORS. DO NOT USE THESE CONSTRUCTION DOCUMENTS IF THE PERMIT HAS EXPIRED OR IS REVOKED AT ALL.
2. THE RECIPIENT RECOGNIZES AND ACKNOWLEDGES THAT THE USE OF THIS INFORMATION WILL BE AT THEIR SOLE RISK AND WITHOUT ANY LIABILITY OR LEGAL EXPOSURE TO DESIGN PATH STUDIO. NO WARRANTIES OF ANY NATURE, WHETHER EXPRESS OR IMPLIED, SHALL ATTACH TO THESE DOCUMENTS AND THE INFORMATION CONTAINED THEREON. ANY USE, REUSE, OR ALTERATION OF THESE DOCUMENTS BY THE RECIPIENT OR BY OTHERS WILL BE AT THE RECIPIENT'S RISK AND FULL LEGAL RESPONSIBILITY. FURTHERMORE, THE RECIPIENT WILL, TO THE FULLEST EXTENT PERMITTED BY LAW, DEFEND, INDEMNIFY AND HOLD DESIGN PATH STUDIO AND ITS ARCHITECTS HARMLESS FROM ANY AND ALL CLAIMS, SUITS, LIABILITY, DEMANDS, JUDGMENTS, OR COSTS ARISING OUT OF OR RESULTING THERE FROM ANY USE OF THESE CONSTRUCTION DOCUMENTS FOR OR ON ACCOUNT OF ANY INJURY, DEATH, DAMAGE OR LOSS TO PERSONS OR PROPERTY, DIRECT OR CONSEQUENTIAL DAMAGES IN ANY AMOUNT. THIS INDEMNITY DOES NOT APPLY TO THE SOLE NEGLIGENCE OR WILLFUL MISCONDUCT OF DESIGN PATH STUDIO OR ITS ARCHITECTS.
3. THE DESIGNS REPRESENTED BY THESE PLANS ARE COPYRIGHTED AND ARE SUBJECT TO COPYRIGHT PROTECTION.
4. IF THE RECIPIENT DOES NOT AGREE WITH THE ABOVE CONDITIONS, DO NOT PROCEED WITH CONSTRUCTION OF AN ADU OR OTHER IMPROVEMENT UNDER THESE PLANS AT ALL.

project
City of Perris
Pre-Approved
ADU Program

revisions
1

description
Building
Sections
Traditional

date 4 April 2025

project no. PERRIS PRADU

drawn by DESIGN PATH STUDIO

sheet no. A4.3

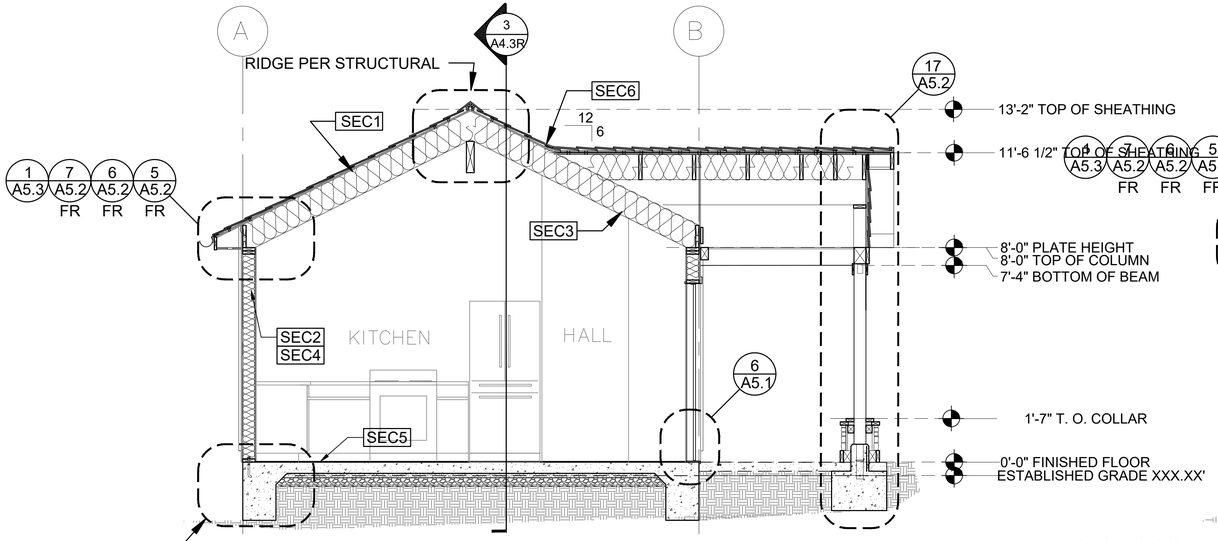

1 SECTION - STUDIO
3/8"=1'-0" TRADITIONAL - REVERSE

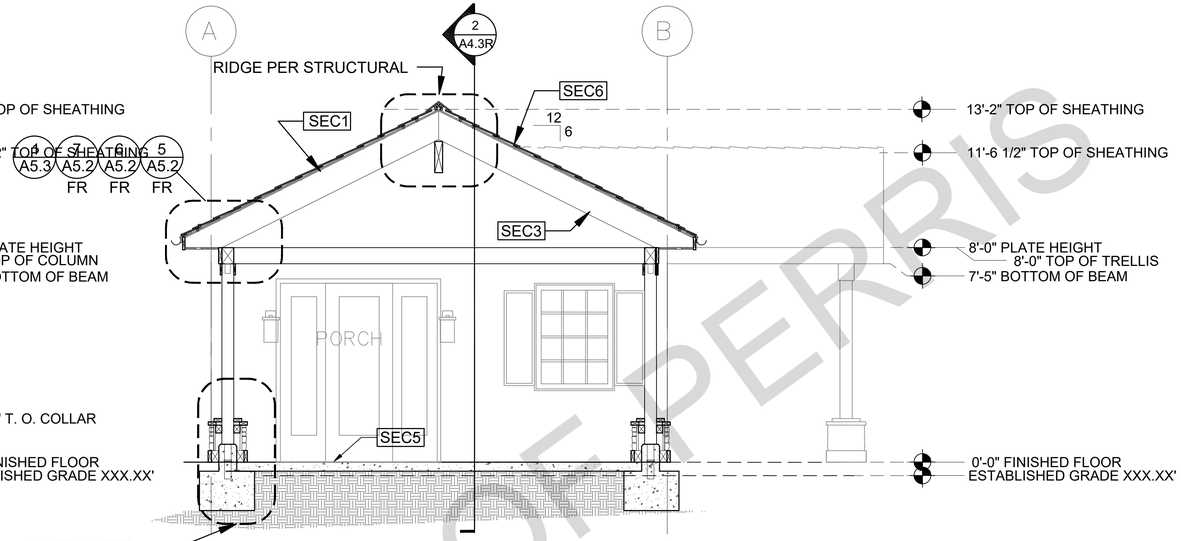

3 SECTION - STUDIO
3/8"=1'-0" TRADITIONAL - REVERSE

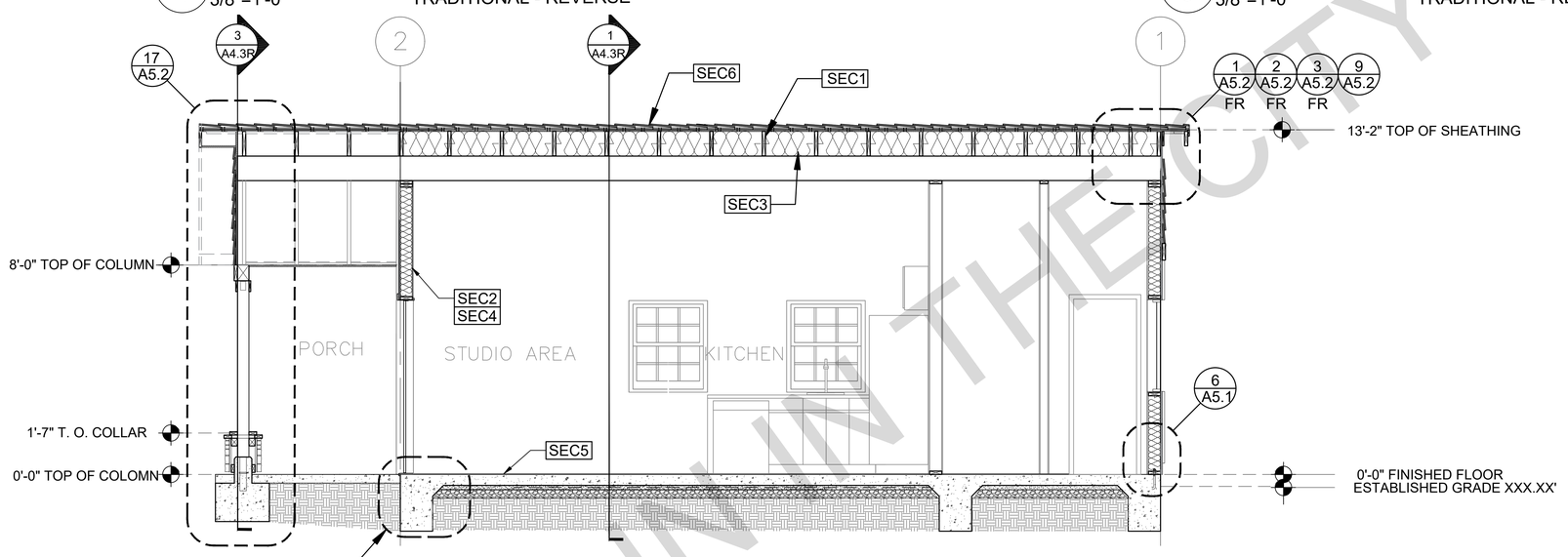

2 SECTION - STUDIO
3/8"=1'-0" TRADITIONAL - REVERSE

SECTION KEYNOTES

SEC1	RAFTERS PER PLAN SEE STRUCTURAL
SEC2	2X STUDS @ 16" O.C. - SEE STRUCTURAL
SEC3	CEILING INSULATION PER TITLE 24 ENERGY CALCULATIONS
SEC4	WALL INSULATION PER TITLE 24 ENERGY CALCULATIONS
SEC5	CONC. SLAB ON GRADE SEE STRUCTURAL
SEC6	MINIMUM CLASS A ROOF ASSEMBLY - SEE SHEET T1.1 FOR MANUFACTURER SPECIFICATIONS

SECTION GENERAL NOTES

1. METALS
SEE PLANS AND DETAILS FOR LOCATIONS, QUANTITY AND CONFIGURATION OF MISCELLANEOUS IRON AND STEEL WORK INCLUDING ASSORTED CLIPS, BRACKETS ANGLES, STRAPS, POST ANCHORS AND LIKE ITEMS.
FURNISH AND INSTALL ALL SUCH ITEMS NECESSARY TO MAKE A COMPLETE
INSTILLATION WHETHER OR NOT SPECIFICALLY DETAILED OR NOTED ON THE
DRAWINGS. ALL EXTERIOR METAL AND HARDWARE IS TO BE GALVANIZED. STEEL IS TO BE
ASTM A3.

2. RAFTER VENTS ARE TO BE STAINLESS STEEL MESH AND ARE TO BE SIZED TO MEET REQUIRED VENTILATION TO ENCLOSED RAFTER SPACES. MAX ¼" MIN ¼" OPENING SIZE ON VENT SCREEN WITH CORROSION-RESISTANT WIRE SCREEN MATERIAL.

3. FRAMER IS TO LAYOUT CEILING JOISTS/ROOF RAFTERS TO ACCOMMODATE RECESSED LIGHTS EXHAUST FANS OR OTHER ELECTRICAL/MECHANICAL FIXTURES.

4. WOOD SOFFIT/CEILING, SIDING & TRIM
ALL NAILS, FASTENERS AND HARDWARE MUST BE STAINLESS STEEL OR HOT-DIPPED GALVANIZED. STAPLES ARE NOT PERMITTED

5. INSULATION
THERMAL INSULATION IS TO BE FOIL BACKED BATT INSULATION WITH AN R VALUE NOT LESS SPECIFIED IN THE TITLE 24 ENERGY CALCULATIONS. AT BATHROOMS, LAUNDRY ROOM , AND MASTER BED/BATHROOMS INSULATION IS TO
BE PROVIDED WITH SOUND INSULATION,

6. FLASHING AND SHEET METAL
ALL FLASHING AND COUNTER FLASHING IS TO BE GALVANIZED AND INSTALLED AS PER SMACNA STANDARDS. ALL PROPOSED FLASHING AND SHEET METAL MATERIALS, GAUGE AND INSTALLATION IS TO BE IN ACCORDANCE WITH SMACNA MANUAL STANDARDS.

7. IN CONCEALED SPACES BETWEEN STAIR STRINGERS AT THE TOP AND BOTTOM OF THE RUN. ENCLOSED SPACES UNDER STAIRS SHALL COMPLY WITH SECTION R302.7.

8. THE PURPOSE OF THESE DRAWINGS IS TO SHOW CONSTRUCTION MATERIALS/ASSEMBLIES. FOR SPECIFIC SIZES AND DETAILS REFER TO ARCHITECTURAL PLANS, ELEVATIONS, DETAILS, & STRUCTURAL PLANS.
*KEYNOTES ONLY APPLY IF REFERNCED ON PLANS
1. INSULATION: REFER TO TITLE 24 REPORT FOR ADDITIONAL RATINGS, REQUIREMENTS, AND INFORMATION
2. FIRE BLOCKING TO BE LOCATED AT THE FOLLOWING LOCATIONS PER 2022 CRC SECTION R302.11:
A. SECTION R302.11-
1. FIREBLOCKING SHALL BE PROVIDED IN CONCEALED SPACES OF STUD WALLS AND PARTITIONS, INCLUDING FURRED SPACES AND PARALLEL ROWS OF STUDS OR STAGGERED STUDS, AS FOLLOWS:
A. VERTICALLY AT CEILING AND FLOOR LEVELS
B. HORIZONTALLY AT INTERVALS NOT EXCEEDING 10FT

9. AT INTERCONNECTIONS BETWEEN CONCEALED VERTICAL AND HORIZONTAL SPACES SUCH AS SOFFITS, DROP CEILINGS AND COVE CEILINGS

10. AT OPENINGS AROUND VENTS, PIPES, DUCTS, CABLES AND WIRES AT CEILINGS AND FLOOR LEVEL, WITH AN APPROVED MATERIAL TO RESIST THE FREE PASSAGE OF FLAME PRODUCTS OF COMBUSTION. THE MATERIAL FILLING THIS ANNULAR SPACE SHALL NOT BE REQUIRED TO MEET THE ASTM E136 REQUIREMENTS
FOR THE FIREBLOCKING OF CHIMNEYS AND FIREPLACES, SEE SECTION R1003.19
FIREBLOCKING OF CORNICES OF A TWO-FAMILY DWELLING IS REQUIRED AT THE LINE OF DWELLING-UNIT SEPARATION

11. SECTION R302.11.1 - FIREBLOCKING MATERIALS SHALL CONSIST OF FOLLOWING MATERIALS:
1. TWO-INCH NOMINAL NUMBER
2. TWO THICKNESS OF ONE-INCH NOMINAL LUMBER WITH BROKEN LAP JOINTS
3. THE THICKNESS OF 0.719-INCH WOOD STRUCTURAL PANELS WITH JOINTS BACKED BY 0.719-INCH WOOD STRUCTURAL PANELS
4. THE THICKNESS OF 0.75-INCH PARTICLE BOARD WITH JOINTS BACKED BY 0.75-INCH PARTICLE BOARD
5. ONE-HALF-INCH GYPSUM BOARD
6. ONE-FOURTH-INCH CEMENT-BASED MILLBOARD
7. BATTS OR BLANKETS OF MINERAL WOOL, MINERAL FIBER OR OTHER APPROVED MATERIAL INSTALLED IN SUCH A MANNER AS TO BE SECURELY RETAINED IN PLACE
8. CELLULOSE INSULATION INSTALLED AS TESTED IN ACCORDANCE WITH ASTM E119 OR UL 263, FOR THE SPECIFIC APPLICATION

LEGEND

SECTION CUT
ELEVATION CALLOUT
DETAIL DRAWING REF.
X'-X" ELEVATION MARKER

DESIGN PATH STUDIO
architecture + engineering + planning
DESIGNPATHSTUDIO.COM

BY USING THESE PERMIT READY CONSTRUCTION DOCUMENTS, THE RECIPIENT ACKNOWLEDGES, ACCEPTS AND VOLUNTARILY AFFIRMS THE FOLLOWING CONDITIONS:
1. THE USE OF THIS INFORMATION IS RESTRICTED TO THE ORIGINAL PROJECT FOR WHICH IT WAS PREPARED FOR THE PERMIT READY ACCESSORY DWELLING UNIT (ADU) PROGRAM FOR THE CITY OF PERRIS ONLY. THIS IS A LIMITED SET OF STANDARDIZED ADU PLANS AND SPECIFICATIONS APPROVED BY THE CITY OF PERRIS BUILDING DEPARTMENT. BUILDING CODES DO CHANGE OVER TIME AND RECIPIENT SHALL ENSURE FULL COMPLIANCE UNDER ALL CODES THEN IN EFFECT AT THE TIME OF THE SUBJECT PERMIT. THIS DOES NOT ELIMINATE OR REDUCE THE RECIPIENT'S RESPONSIBILITY TO VERIFY ANY AND ALL INFORMATION RELEVANT TO THE RECIPIENT'S WORK AND RESPONSIBILITY ON THIS PROJECT. DESIGN PATH STUDIO SHALL NOT BE RESPONSIBLE FOR TRANSLATION ERRORS. DO NOT USE THESE CONSTRUCTION DOCUMENTS IF THE PERMIT HAS EXPIRED OR IS REVOKED AT ALL.
2. THE RECIPIENT RECOGNIZES AND ACKNOWLEDGES THAT THE USE OF THIS INFORMATION WILL BE AT THEIR SOLE RISK AND WITHOUT ANY LIABILITY OR LEGAL EXPOSURE TO DESIGN PATH STUDIO. NO WARRANTIES OF ANY NATURE, WHETHER EXPRESS OR IMPLIED, SHALL ATTACH TO THESE DOCUMENTS AND THE INFORMATION CONTAINED THEREON. ANY USE, REUSE, OR ALTERATION OF THESE DOCUMENTS BY THE RECIPIENT OR BY OTHERS WILL BE AT THE RECIPIENT'S RISK AND FULL LEGAL RESPONSIBILITY. FURTHERMORE, THE RECIPIENT WILL, TO THE FULLEST EXTENT PERMITTED BY LAW, DEFEND, INDEMNIFY AND HOLD DESIGN PATH STUDIO AND ITS ARCHITECTS HARMLESS FROM ANY AND ALL CLAIMS, SUITS, LIABILITY, DEMANDS, JUDGMENTS, OR COSTS ARISING OUT OF OR RESULTING THERE FROM ANY USE OF THESE CONSTRUCTION DOCUMENTS FOR OR ON ACCOUNT OF ANY INJURY, DEATH, DAMAGE OR LOSS TO PERSONS OR PROPERTY, DIRECT OR CONSEQUENTIAL DAMAGES IN ANY AMOUNT. THIS INDEMNITY DOES NOT APPLY TO THE SOLE NEGLIGENCE OR WILLFUL MISCONDUCT OF DESIGN PATH STUDIO OR ITS ARCHITECTS.
3. THE DESIGNS REPRESENTED BY THESE PLANS ARE COPYRIGHTED AND ARE SUBJECT TO COPYRIGHT PROTECTION.
4. IF THE RECIPIENT DOES NOT AGREE WITH THE ABOVE CONDITIONS, DO NOT PROCEED WITH CONSTRUCTION OF AN ADU OR OTHER IMPROVEMENT UNDER THESE PLANS AT ALL.

project
City of Perris
Pre-Approved
ADU Program

revisions
1

description
Building
Sections
Traditional
Reverse

date 4 April 2025

project no. PERRIS PRADU

drawn by DESIGN PATH STUDIO

sheet no. A4.3R

FOR USE IN IN THE CITY OF PERRIS

13

10 THROUGH PENETRATION @ WALL

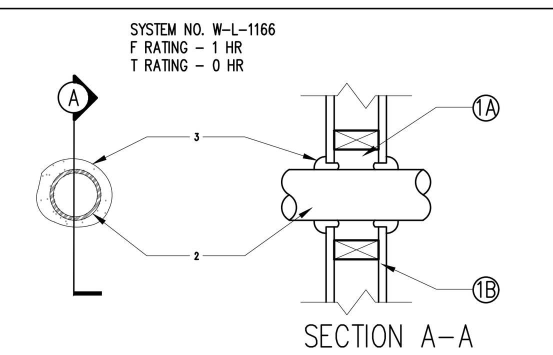

1. WALL ASSEMBLY
   THE 1 HR. FIRE RATED GYPSUM WALLBOARD/STUD WALL ASSEMBLY SHALL BE CONSTRUCTED OF THE MATERIALS AND IN THE MANNER SPECIFIED IN THE INDIVIDUAL U300 OR U400 SERIES WALL AND PARTITION DESIGNS IN UL FIRE RESISTANCE DIRECTORY & SHALL INCLUDE THE FOLLOWING CONSTRUCTION FEATURES:
   A. STUDS-WALL FRAMING MAY CONSIST OF EITHER WOOD STUDS OR STEEL CHANNEL STEEL. WOOD STUDS TO CONSIST OF NOM. 2 IN BY 4 IN. LUMBER SPACED 16 IN. O.C. STEEL STUDS TO BE MIN. 3 1/2 IN. WIDE & SPACED MAX. 24 IN. O.C.
   B. GYPSUM BOARD (BEARING THE UL CLASSIFICATION MARKING)-THICKNESS, TYPE, NUMBER OF LAYERS AND FASTENERS AS REQUIRED IN THE INDIVIDUAL WALL AND PARTITION DESIGN. MAX. DIAM. OF OPENING IS 5 IN. THE HOURLY F RATING OF THE FIRESTOP SYSTEM IS EQUAL TO THE HOURLY FIRE RATING OF THE WALL ASSEMBLY IN WHICH IT IS INSTALLED
2. THROUGH - PENETRANTS
   ONE METALLIC PIPE, CONDUIT OR TUBING INSTALLED EITHER CONCENTRICALLY OR ECCENTRICALLY WITHIN THE FIRESTOP SYSTEM. THE ANNULAR SPACE BETWEEN THE PIPE, CONDUIT OR TUBING AND PERIPHERY OF THE OPENING SHALL BE MIN. OF 0 IN. (POINT CONTACT) TO A MAX. 1/8 IN. PIPE CONDUIT OR TUBING TO BE RIGIDLY SUPPORTED ON BOTH SIDES OF WALL ASSEMBLY. THE FOLLOWING TYPES AND SIZES OF METALLIC PIPES, CONDUITS, OR TUBING MAY BE USED:
   A. COPPER TUBING-NOM. 4 IN DIAM. (OR SMALLER) TYPE M (OR HEAVIER) COPPER TUBING.
   B. COPPER PIPE-NOM. 4 IN DIAM. (OR SMALLER) REGULAR (OR HEAVIER) COPPER PIPE.
   C. STEEL PIPE-NOM. 4 IN DIAM. (OR SMALLER) SCHEDULE 5 (OR HEAVIER) STEEL PIPE.
   D. CONDUIT-NOM. 4 IN DIAM. (OR SMALLER) STEEL ELECTRICAL METALLIC TUBING OR RIGID STEEL CONDUIT
   E. IRON PIPE-NOM. 4 IN DIAM. (OR SMALLER) CAST OR DUCTILE IRON PIPE
3. FILL, VOID OR CAVITY MATERIALS (BEARING THE UL CLASSIFICATION MARKING) -CAULK OR PUTTY MIN. 1/2 IN. DIAMETER BEAD CAULK OR PUTTY APPLIED CONTINUOUSLY AROUND THE PENETRATE ON THE WALL SURFACES ON BOTH SIDES OF THE WALL. 3M COMPANY - OP 25WB+ CAULK OF MPS-2+ PUTTY

SCALE: 1"=1'-0"

4 FIRE RESISTIVE 1-HOUR WOOD FRAMED WALLS

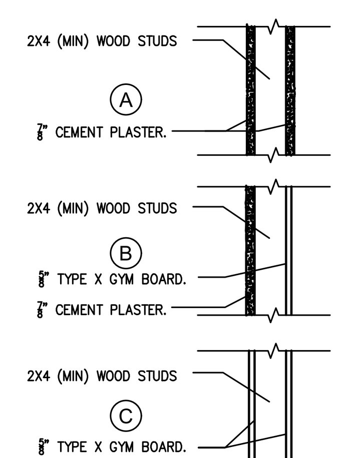

2022 CBC TABLE 721.1(2)ITEM #		GYPSUM ASSOC. FILE#
15-1.2	2"X4" WOOD STUDS 16" ON CENTER WITH METAL LATH AND 3/4" CEMENT PLASTER ON EACH SIDE. LATH ATTACHED WITH 6D COMMON NAILS 7" ON CENTER DRIVEN TO 1" MINIMUM PENETRATION AND BENT OVER. PLASTER MIX 1:4 FOR SCRATCH COAT AND 1:5 FOR BROWN COAT, BY VOLUME, CEMENT TO SAND.	N/A
15-1.3	2"X4" WOOD STUDS 16" ON CENTER WITH 7/8" CEMENT PLASTER (MEASURED FROM THE FACE OF STUD) ON THE EXTERIOR SURFACE TREATMENT AS REQUIRED FOR INTERIOR WOOD STUD PARTITIONS IN THIS TABLE. PLASTER MIX 1:4 FOR SCRATCH COAT AND 1:5 FOR BROWN COAT, BY VOLUME, CEMENT TO SAND.	N/A
14-1.3	2"X4" WOOD STUDS 24" ON CENTER WITH 5/8" TYPE x GYPSUM WALLBOARD APPLIED VERTICALLY OR HORIZONTALLY NAILED WITH 6D COOLER OR WALLBOARD NAILS AT 7" ON CENTER WITH END JOINTS ON NAILING MEMBERS. STAGER JOINTS ON EACH SIDE.	WP 3510 & WP 3514

1. NOTE: THE ADDITION OF PLYWOOD SHEATHING TO THESE ASSEMBLIES DOES NOT LESSEN THEIR FIRE RESISTANCE.ATTACH WALL TO EXISTING OR NEW FIRE RATED FLOOR/CEILING ASSEMBLY AS REQUIRED.
2. SEE DETAIL 10/A5.1 FOR PENETRATIONS

WP 3510 - ONE LAYER 5/8" TYPE X GYPSUM WALLBOARD OR GYPSUM VENEER BASE APPLIED PARALLEL OR AT RIGHT ANGLES TO EACH SIDE OF 2 X 4 WOOD STUDS 16" O.C. WITH 11/4" TYPE W DRYWALL SCREWS 12" O.C. JOINTS STAGGERED 16" ON OPPOSITE SIDES. (LOAD-BEARING)

WP 3514 - ONE LAYER 5/8" TYPE X GYPSUM WALLBOARD OR GYPSUM VENEER BASE APPLIED PARALLEL OR AT RIGHT ANGLES TO EACH SIDE OF 2 X 4 WOOD STUDS 24" O.C. WITH 6D COATED NAILS, 17/8" LONG, 0.0915" SHANK, 1/4" HEADS, 7" O.C. JOINTS STAGGERED 24" ON OPPOSITE SIDES. (LOAD-BEARING)

SCALE: NTS

1 WINDOW SILL FLASHING

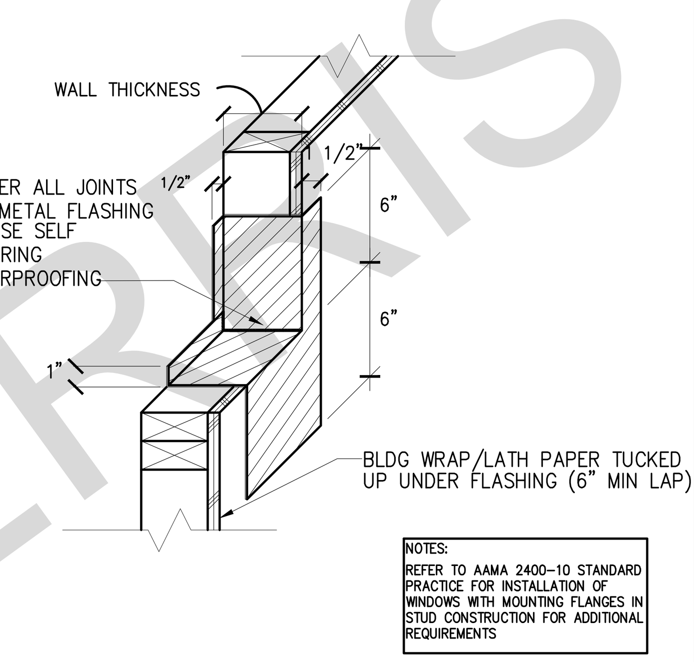

SEE DETAIL 5/A5.1 FOR MORE INFORMATION

NOTES:
REFER TO AAMA 2400-10 STANDARD PRACTICE FOR INSTALLATION OF WINDOWS WITH MOUNTING FLANGES IN STUD CONSTRUCTION FOR ADDITIONAL REQUIREMENTS

SCALE: 1½"=1'-0"

14

11

8

5 WINDOW FLASHING

FLASHING PAPER, MOISTOP FLASHING OR EQUAL, (9" WIDE MIN.) O/NAILING FIN @ TOP OF WINDOWS (HEAD) TYP. TWO CONTINUOUS BEADS OF MOISTOP SEALANT OR EQUAL UNDER FLASHING PAPER (1) O/NAILING FIN AND (1) AT TOP OF FLUSHING PAPER TYP.

NAIL'G FIN.

FLASHING PAPER, SELF SEALING MEMBRANE, (9" WIDE MIN.) O/WOOD FRAMING & UNDER NAILING FIN @ SIDE OF WINDOWS (JAMB) TYP.

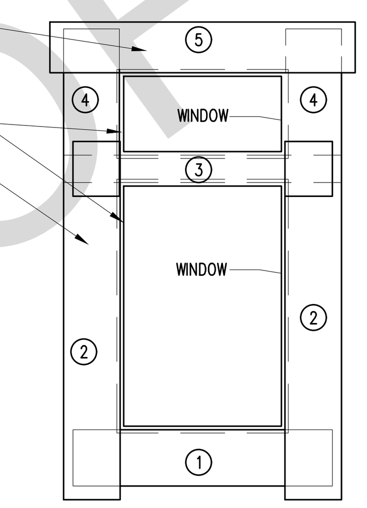

NOTES:

(1)= INDICATES SEQUENCE FOR INSTALLATION

9" MOIST STOP FLASHING PAPER TYP. OF FLASHING PAPER

THE ACTUAL NUMBER OF FLASHING PIECES REQUIRED IS DETERMINE BY THE RADIUS OF THE OPENING AND THE SIZE OF THE FLASHING. (9" WIDE FLASHING MIN.)

APPLY A CONTINUOUS BEAD OF SEALANT COMPLYING WITH AAMA 800 TO THE BACKSIDE (INTERIOR) OF THE WINDOW MOUNTING FLANGES

AT WINDOW HEAD, JAMBS AND SILL ALL CORROSIVE RESISTANT FASTENERS ARE TO BE NAILED THROUGH FIN NO CLOSER THAN 3" O.C. AND NOT MROE THAN 16" O.C.

FASTENERS SHALL BE WITHIN 10" FROM CORNERS NO NAILS SHALL BE BENT OVER THE NAILING FIN TO SECURE WINDOW

REFER TO AAMA 2400-10 STANDARD PRACTICE FOR INSTALLATION OF WINDOWS WITH MOUNTING FLANGES IN STUD CONSTRUCTION FOR ADDITIONAL REQUIREMENTS

SCALE: NTS

2 DOOR THRESHOLD FLASHING

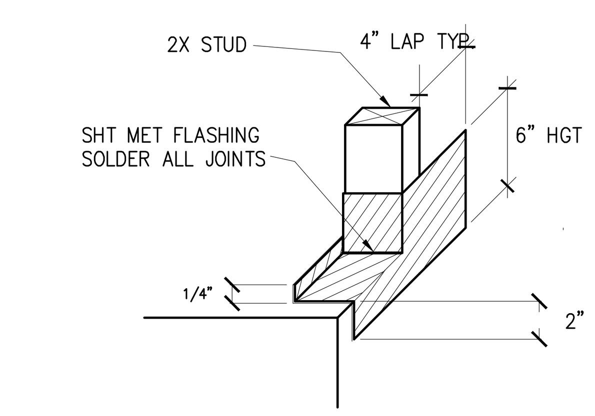

*PROVIDE SOLID BLOCKING AT ALL FLASHING LOCATIONS

SCALE: 1½"=1'-0"

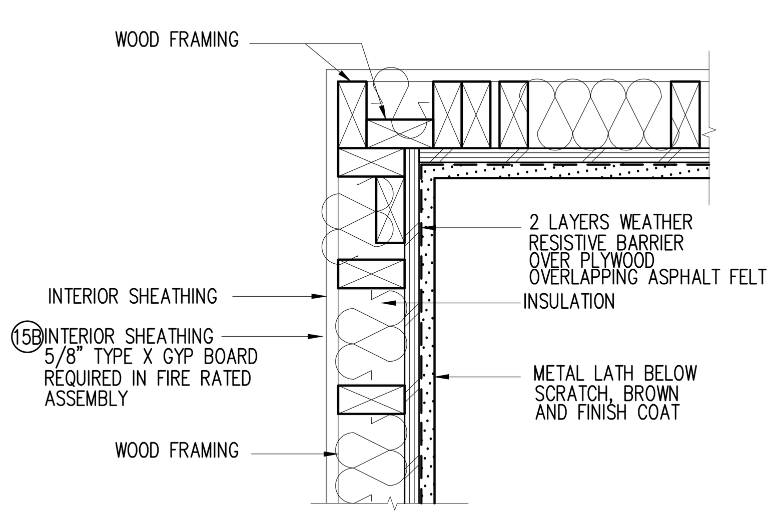

STUCCO AT INSIDE CORNER

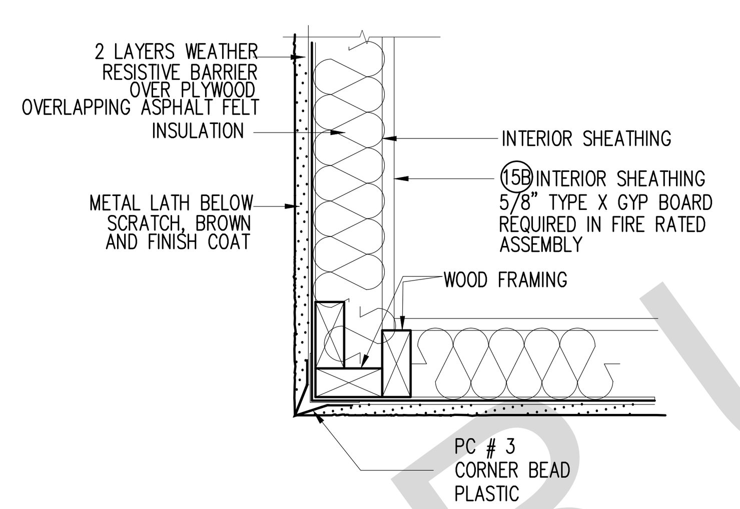

STUCCO AT OUTSIDE CORNER

15B FIRE RATED STUCCO WALL

15 STUCCO WALL

SCALE: 1½"=1'-0"

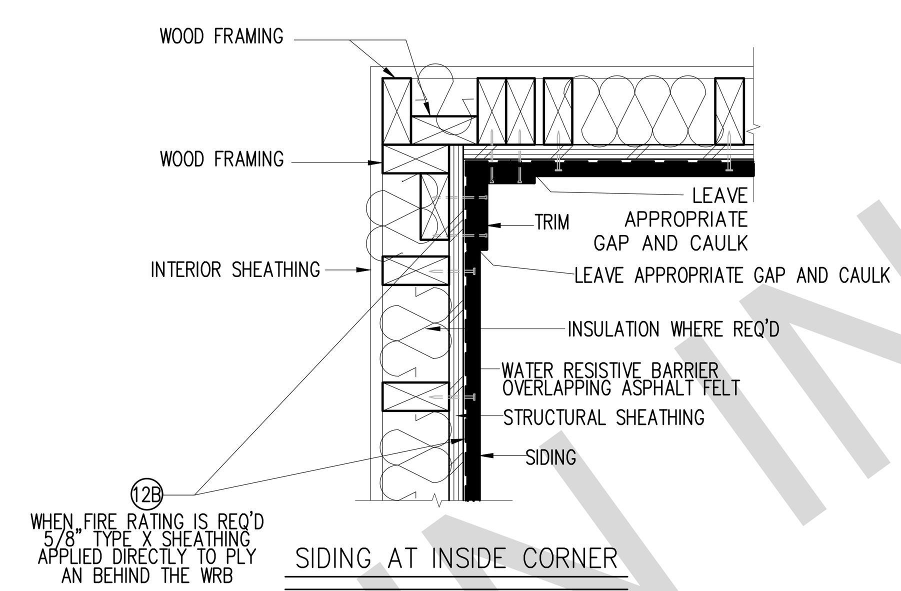

SIDING AT INSIDE CORNER

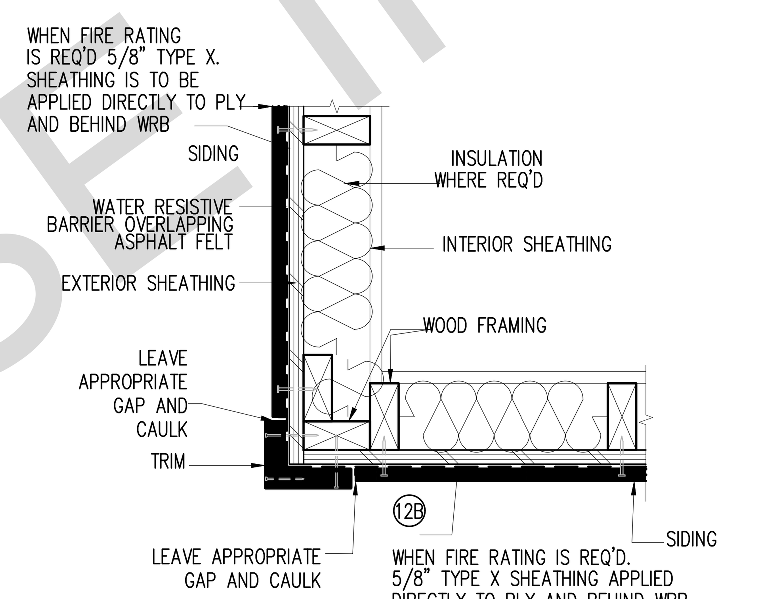

SIDING AT OUTSIDE CORNER

12B FIRE RATED SIDING WALL

12 SIDING WALL

SCALE: 1½"=1'-0"

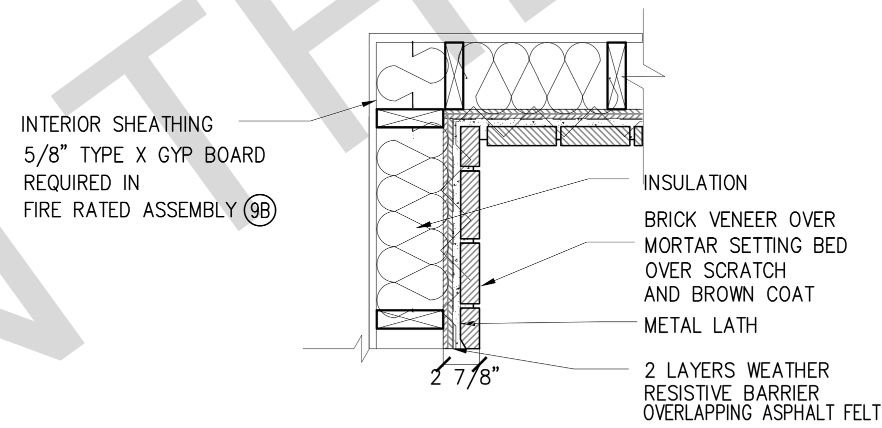

STONE VENEER AT INSIDE CORNER

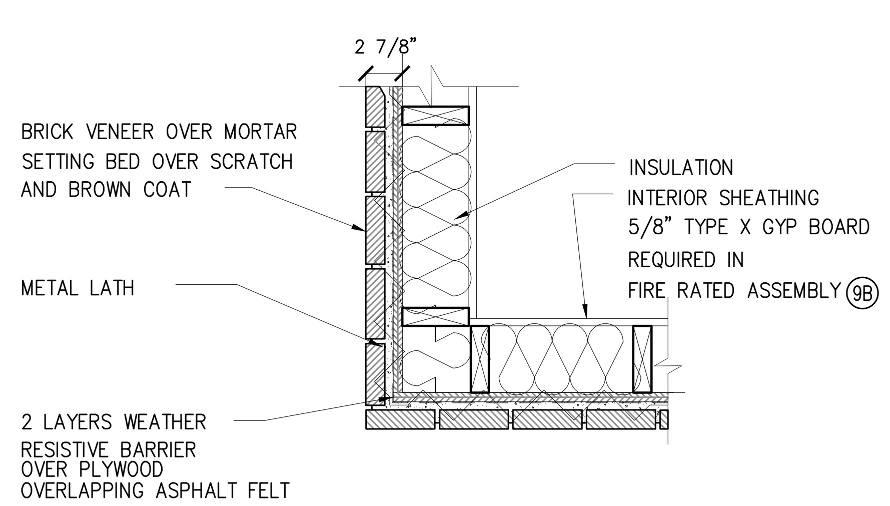

STONE VENEER AT OUTSIDE CORNER

9B FIRE RATED STONE WALL

9 STONE WALL

SCALE: 1½"=1'-0"

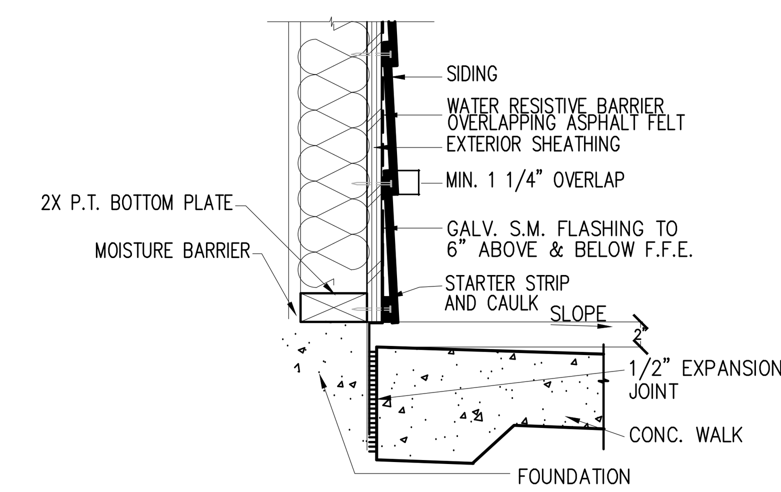

SIDING AT CONCRETE WALK

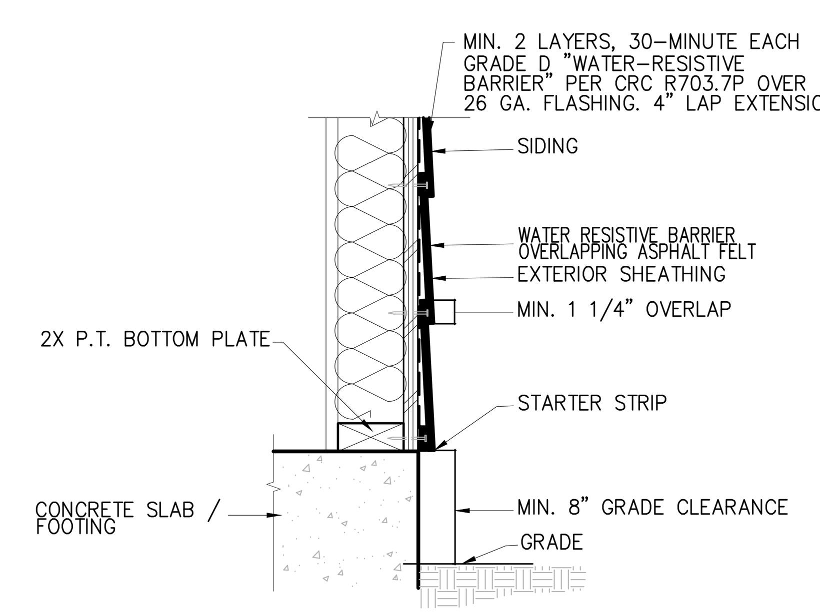

SIDING AT GRADE

6 SIDING - WALL SECTION

SCALE: 1½"=1'-0"

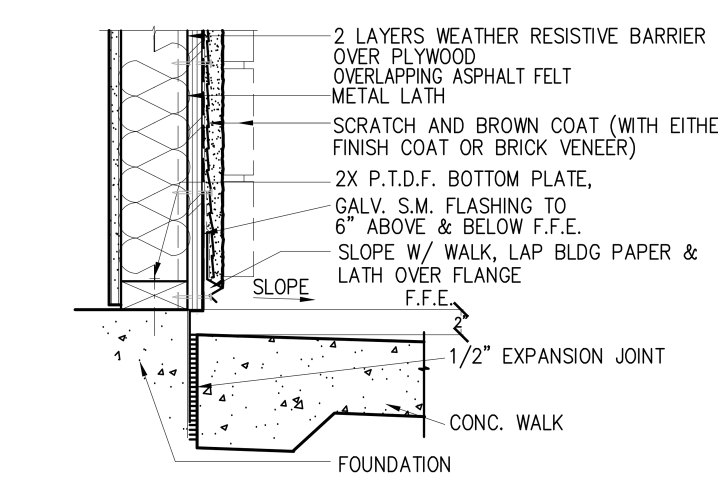

STUCCO / STONE WEEP SCREED AT CONCRETE WALK

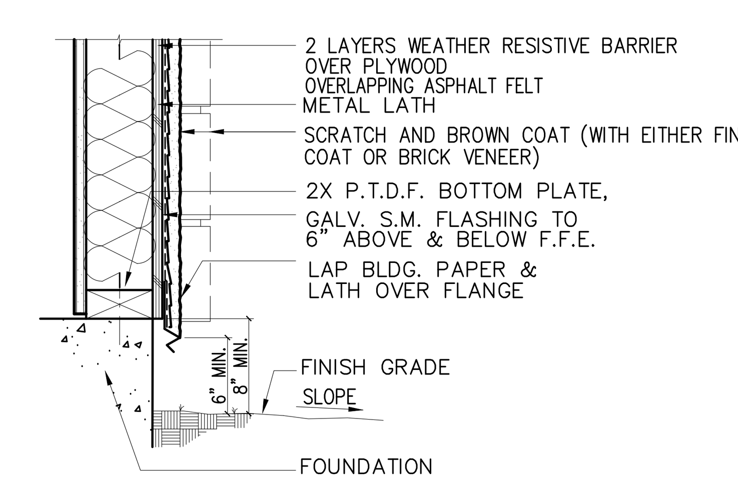

STUCCO / STONE WEEP SCREED AT GRADE

3 STUCCO/STONE - WALL SECTION

SCALE: 1½"=1'-0"

FOR USE IN THE CITY OF PERRIS

DESIGN PATH STUDIO
architecture + engineering + planning
DESIGNPATHSTUDIO.COM

BY USING THESE PERMIT READY CONSTRUCTION DOCUMENTS, THE RECIPIENT ACKNOWLEDGES, ACCEPTS AND VOLUNTARILY AFFIRMS THE FOLLOWING CONDITIONS:
1. THE USE OF THIS INFORMATION IS RESTRICTED TO THE ORIGINAL PROJECT FOR WHICH IT WAS PREPARED FOR THE PERMIT READY ACCESSORY DWELLING UNIT (ADU) PROGRAM FOR THE CITY OF PERRIS ONLY. THIS IS A LIMITED SET OF STANDARDIZED ADU PLANS AND SPECIFICATIONS APPROVED BY THE CITY OF PERRIS BUILDING DEPARTMENT. BUILDING CODES DO CHANGE OVER TIME AND RECIPIENT SHALL ENSURE FULL COMPLIANCE UNDER ALL CODES THEN IN EFFECT AT THE TIME OF THE SUBJECT PERMIT. THIS DOES NOT ELIMINATE OR REDUCE THE RECIPIENT'S RESPONSIBILITY TO VERIFY ANY AND ALL INFORMATION RELEVANT TO THE RECIPIENT'S WORK AND RESPONSIBILITY ON THIS PROJECT. DESIGN PATH STUDIO SHALL NOT BE RESPONSIBLE FOR TRANSLATION ERRORS. DO NOT USE THESE CONSTRUCTION DOCUMENTS IF THE PERMIT HAS EXPIRED OR IS REVOKED AT ALL.
2. THE RECIPIENT RECOGNIZES AND ACKNOWLEDGES THAT THE USE OF THIS INFORMATION WILL BE AT THEIR SOLE RISK AND WITHOUT ANY LIABILITY OR LEGAL EXPOSURE TO DESIGN PATH STUDIO. NO WARRANTIES OF ANY NATURE, WHETHER EXPRESS OR IMPLIED, SHALL ATTACH TO THESE DOCUMENTS AND THE INFORMATION CONTAINED THEREON. ANY USE, REUSE, OR ALTERATION OF THESE DOCUMENTS BY THE RECIPIENT OR BY OTHERS WILL BE AT THE RECIPIENT'S RISK AND FULL LEGAL RESPONSIBILITY. FURTHERMORE, THE RECIPIENT WILL, TO THE FULLEST EXTENT PERMITTED BY LAW, DEFEND, INDEMNIFY AND HOLD DESIGN PATH STUDIO AND ITS ARCHITECTS HARMLESS FROM ANY AND ALL CLAIMS, SUITS, LIABILITY, DEMANDS, JUDGMENTS, OR COSTS ARISING OUT OF OR RESULTING THERE FROM ANY USE OF THESE CONSTRUCTION DOCUMENTS FOR OR ON ACCOUNT OF ANY INJURY, DEATH, DAMAGE OR LOSS TO PERSONS OR PROPERTY, DIRECT OR CONSEQUENTIAL DAMAGES IN ANY AMOUNT. THIS INDEMNITY DOES NOT APPLY TO THE SOLE NEGLIGENCE OR WILLFUL MISCONDUCT OF DESIGN PATH STUDIO OR ITS ARCHITECTS.
3. THE DESIGNS REPRESENTED BY THESE PLANS ARE COPYRIGHTED AND ARE SUBJECT TO COPYRIGHT PROTECTION.
4. IF THE RECIPIENT DOES NOT AGREE WITH THE ABOVE CONDITIONS, DO NOT PROCEED WITH CONSTRUCTION OF AN ADU OR OTHER IMPROVEMENT UNDER THESE PLANS AT ALL.

project
City of Perris
Pre-Approved
ADU Program

revisions
01

description
Architectural
Details

date 4 April 2025
project no. PERRIS PRADU
drawn by DESIGN PATH STUDIO
sheet no. A5.1

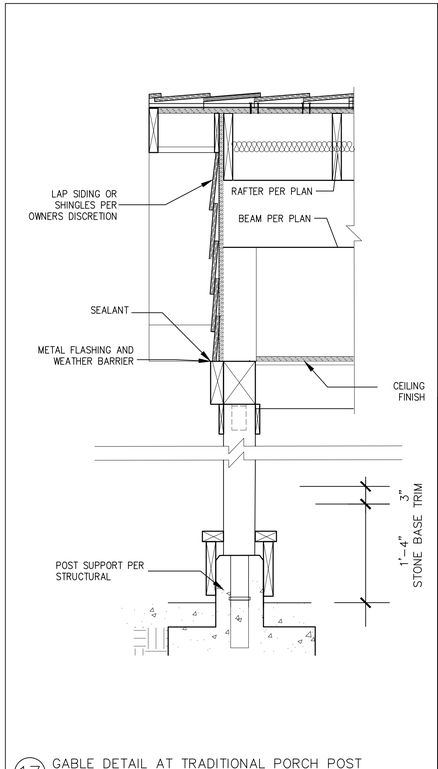

17 GABLE DETAIL AT TRADITIONAL PORCH POST
SCALE: 1"=1'-0"

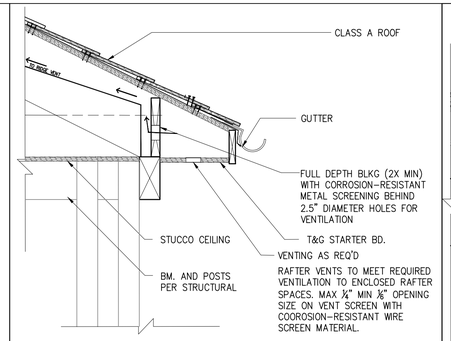

13 EAVE AT CRAFTSMAN PORCH
SCALE: 1"=1'-0"

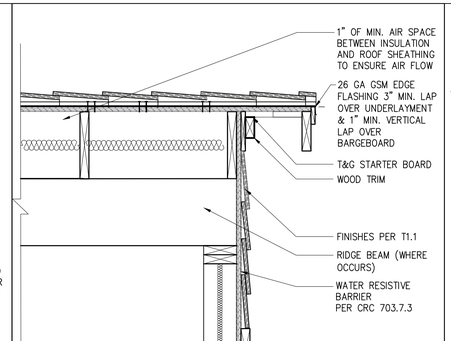

9 GABLE END, TYP. – CRAFTSMAN/TRADITIONAL
SCALE: 1"=1'-0"

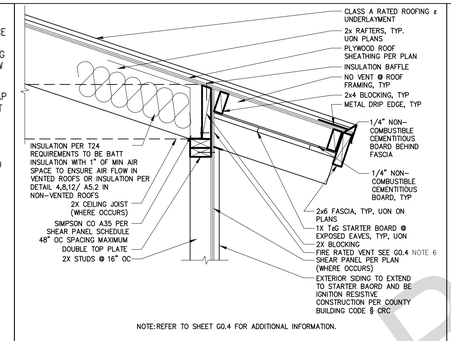

5 IGNITION RESISTIVE EXPOSED RAFTER EAVE
SCALE: 1"=1'-0"

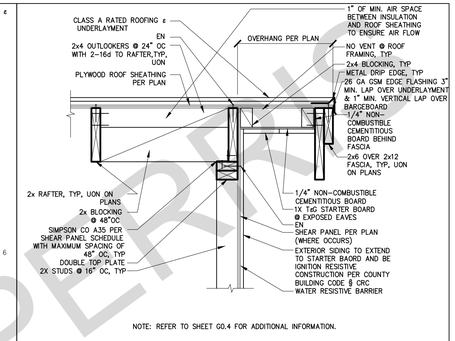

1 IGNITION RESISTIVE GABLE WITH 2x6 & 2x12 FASCIA
SCALE: 1"=1'-0"

18 GABLE DETAIL AT CRAFTSMAN PORCH POST
SCALE: 1"=1'-0"

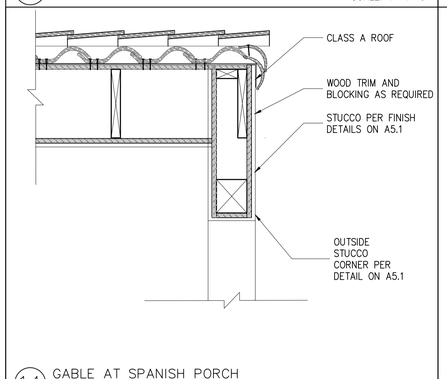

14 GABLE AT SPANISH PORCH
SCALE: 1"=1'-0"

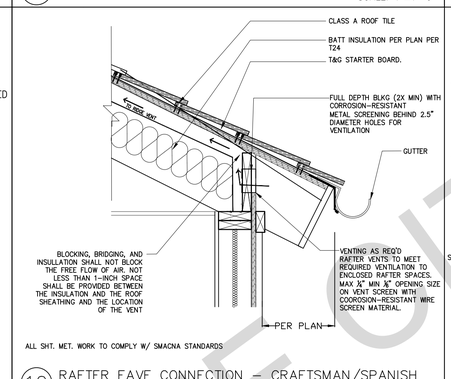

10 RAFTER EAVE CONNECTION – CRAFTSMAN/SPANISH
SCALE: 1"=1'-0"

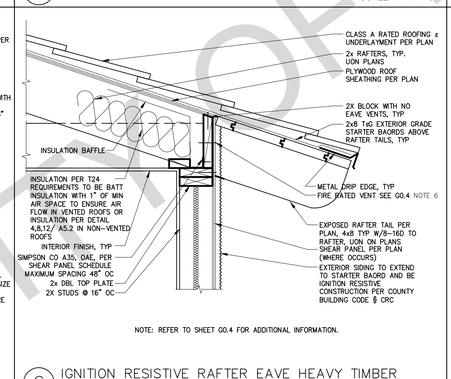

6 IGNITION RESISTIVE RAFTER EAVE HEAVY TIMBER
SCALE: 1"=1'-0"

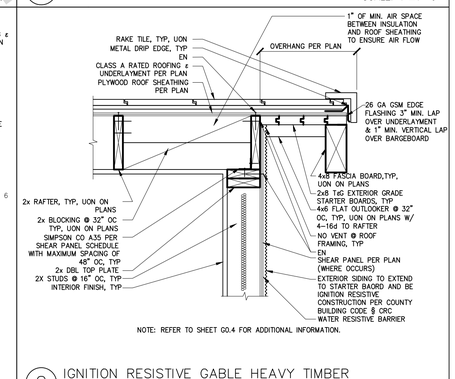

2 IGNITION RESISTIVE GABLE HEAVY TIMBER
SCALE: 1"=1'-0"

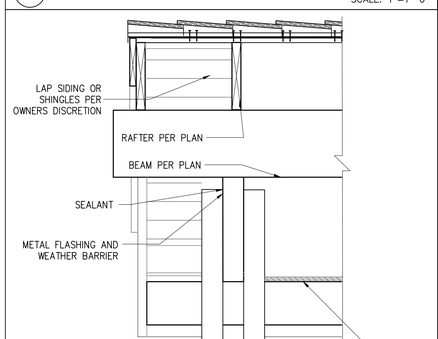

15 EAVE AT SPANISH PORCH
SCALE: 1"=1'-0"

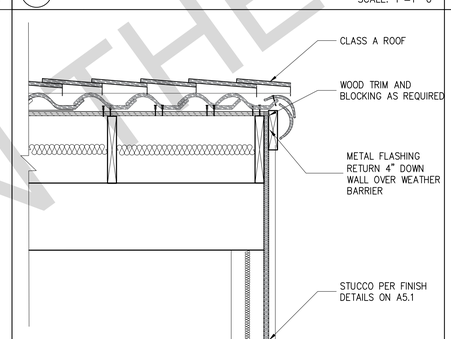

11 GABLE END AT SPANISH
SCALE: 1"=1'-0"

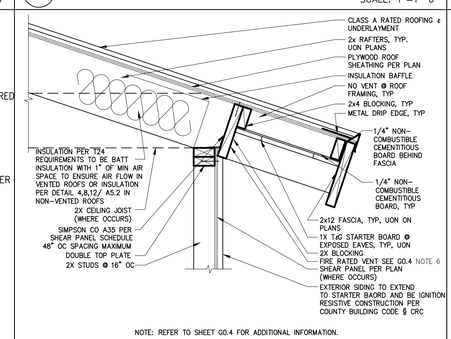

7 IGNITION RESISTIVE RAFTER EAVE WITH 2x FASCIA
SCALE: 1"=1'-0"

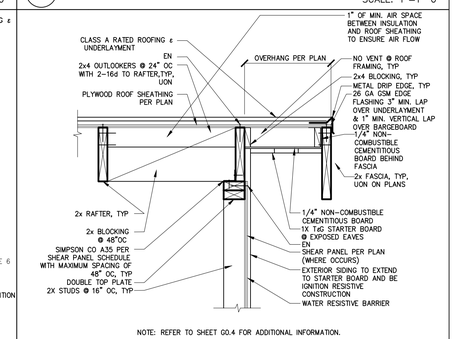

3 IGNITION RESISTIVE GABLE WITH 2x FASCIA
SCALE: 1"=1'-0"

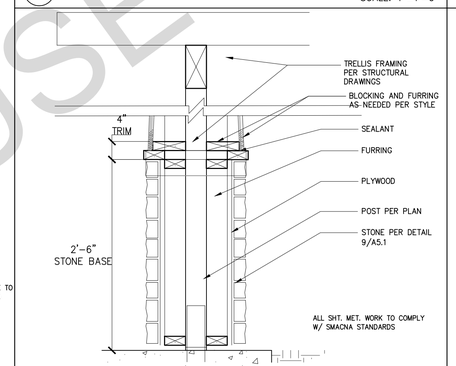

16 TRELLIS COLUMN – CRAFTSMAN/SPANISH
SCALE: 1"=1'-0"

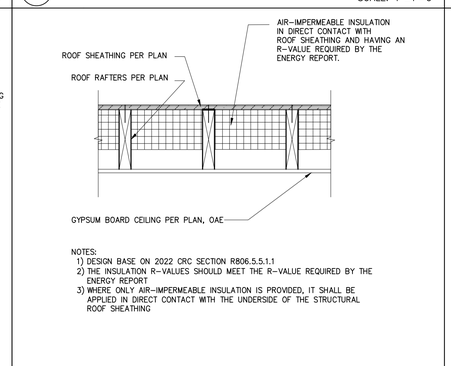

NOTES:
1) DESIGN BASE ON 2022 CRC SECTION R806.5.5.1.1
2) THE INSULATION R-VALUES SHOULD MEET THE R-VALUE REQUIRED BY THE ENERGY REPORT
3) WHERE ONLY AIR-IMPERMEABLE INSULATION IS PROVIDED, IT SHALL BE APPLIED IN DIRECT CONTACT WITH THE UNDERSIDE OF THE STRUCTURAL ROOF SHEATHING

12 INSULATION @ UNVENTED ROOF ASSEMBLY IMPERMEABLE ONLY
SCALE: 1"=1'-0"

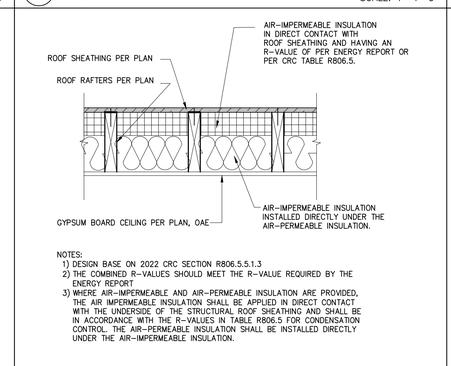

NOTES:
1) DESIGN BASE ON 2022 CRC SECTION R806.5.5.1.3
2) THE COMBINED R-VALUES SHOULD MEET THE R-VALUE REQUIRED BY THE ENERGY REPORT
3) WHERE AIR-IMPERMEABLE AND AIR-PERMEABLE INSULATION ARE PROVIDED, THE AIR IMPERMEABLE INSULATION SHALL BE APPLIED IN DIRECT CONTACT WITH THE UNDERSIDE OF THE STRUCTURAL ROOF SHEATHING AND SHALL BE IN ACCORDANCE WITH THE R-VALUES IN TABLE R806.5 FOR CONDENSATION CONTROL. THE AIR-PERMEABLE INSULATION SHALL BE INSTALLED DIRECTLY UNDER THE AIR-IMPERMEABLE INSULATION.

8 INSULATION @ UNVENTED ROOF ASSEMBLY BOTH TYPES
SCALE: 1"=1'-0"

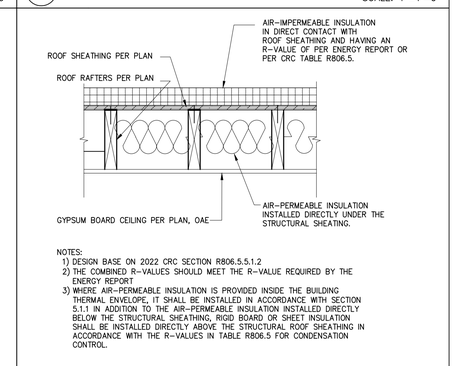

NOTES:
1) DESIGN BASE ON 2022 CRC SECTION R806.5.5.1.2
2) THE COMBINED R-VALUES SHOULD MEET THE R-VALUE REQUIRED BY THE ENERGY REPORT
3) WHERE AIR-PERMEABLE INSULATION IS PROVIDED INSIDE THE BUILDING THERMAL ENVELOPE, IT SHALL BE INSTALLED IN ACCORDANCE WITH SECTION 5.1.1 IN ADDITION TO THE AIR-PERMEABLE INSULATION INSTALLED DIRECTLY BELOW THE STRUCTURAL SHEATHING, RIGID BOARD OR SHEET INSULATION SHALL BE INSTALLED DIRECTLY ABOVE THE STRUCTURAL ROOF SHEATHING IN ACCORDANCE WITH THE R-VALUES IN TABLE R806.5 FOR CONDENSATION CONTROL.

4 INSULATION AT UNVENTED ROOF ASSEMBLY–OVER/UNDER
SCALE: 1"=1'-0"

FOR USE IN WITHE OF PERRIS

DESIGN PATH STUDIO
architecture + engineering + planning
DESIGNPATHSTUDIO.COM

BY USING THESE PERMIT READY CONSTRUCTION DOCUMENTS, THE RECIPIENT ACKNOWLEDGES, ACCEPTS AND VOLUNTARILY AFFIRMS THE FOLLOWING CONDITIONS:
1. THE USE OF THIS INFORMATION IS RESTRICTED TO THE ORIGINAL PROJECT FOR WHICH IT WAS PREPARED FOR THE PERMIT READY ACCESSORY DWELLING UNIT (ADU) PROGRAM FOR THE CITY OF PERRIS ONLY. THIS IS A LIMITED SET OF STANDARDIZED ADU PLANS AND SPECIFICATIONS APPROVED BY THE CITY OF PERRIS BUILDING DEPARTMENT. BUILDING CODES DO CHANGE OVER TIME AND RECIPIENT SHALL ENSURE FULL COMPLIANCE UNDER ALL CODES THEN IN EFFECT AT THE TIME OF THE SUBJECT PERMIT. THIS DOES NOT ELIMINATE OR REDUCE THE RECIPIENT'S RESPONSIBILITY TO VERIFY ANY AND ALL INFORMATION RELEVANT TO THE RECIPIENT'S WORK AND RESPONSIBILITY ON THIS PROJECT. DESIGN PATH STUDIO SHALL NOT BE RESPONSIBLE FOR TRANSLATION ERRORS. DO NOT USE THESE CONSTRUCTION DOCUMENTS IF THE PERMIT HAS EXPIRED OR IS REVOKED AT ALL.
2. THE RECIPIENT RECOGNIZES AND ACKNOWLEDGES THAT THE USE OF THIS INFORMATION WILL BE AT THEIR SOLE RISK AND WITHOUT ANY LIABILITY OR LEGAL EXPOSURE TO DESIGN PATH STUDIO. NO WARRANTIES OF ANY NATURE, WHETHER EXPRESS OR IMPLIED, SHALL ATTACH TO THESE DOCUMENTS AND THE INFORMATION CONTAINED THEREON. ANY USE, REUSE, OR ALTERATION OF THESE DOCUMENTS BY THE RECIPIENT OR BY OTHERS WILL BE AT THE RECIPIENT'S RISK AND FULL LEGAL RESPONSIBILITY. FURTHERMORE, THE RECIPIENT WILL, TO THE FULLEST EXTENT PERMITTED BY LAW, DEFEND, INDEMNIFY AND HOLD DESIGN PATH STUDIO AND ITS ARCHITECTS HARMLESS FROM ANY AND ALL CLAIMS, SUITS, LIABILITY, DEMANDS, JUDGMENTS, OR COSTS ARISING OUT OF OR RESULTING THERE FROM ANY USE OF THESE CONSTRUCTION DOCUMENTS FOR OR ON ACCOUNT OF ANY INJURY, DEATH, DAMAGE OR LOSS TO PERSONS OR PROPERTY, DIRECT OR CONSEQUENTIAL DAMAGES IN ANY AMOUNT. THIS INDEMNITY DOES NOT APPLY TO THE SOLE NEGLIGENCE OR WILLFUL MISCONDUCT OF DESIGN PATH STUDIO OR ITS ARCHITECTS.
3. THE DESIGNS REPRESENTED BY THESE PLANS ARE COPYRIGHTED AND ARE SUBJECT TO COPYRIGHT PROTECTION.
4. IF THE RECIPIENT DOES NOT AGREE WITH THE ABOVE CONDITIONS, DO NOT PROCEED WITH CONSTRUCTION OF AN ADU OR OTHER IMPROVEMENT UNDER THESE PLANS AT ALL.

project
City of Perris Pre-Approved ADU Program

revisions
01

description
Architectural Details

date 4 April 2025
project no. PERRIS PRADU
drawn by DESIGN PATH STUDIO
sheet no. A5.2

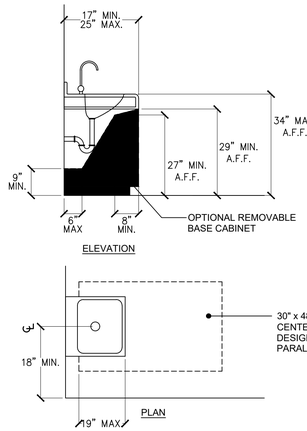

NOTES:
WATER SUPPLY AND DRAIN PIPES EXPOSED UNDER LAVATORIES AND SINKS SHALL BE INSULATED OR OTHERWISE CONFIGURED TO PROTECT AGAINST CONTACT. THERE SHALL BE NO SHARP OR ABRASIVE SURFACES UNDER LAVATORIES AND SINKS (11B-606.5)

IN RESIDENTIAL DWELLING UNITS, CABINETRY SHALL BE PERMITTED UNDER LAVATORIES PROVIDED THAT ALL OF THE FOLLOWING CONDITIONS ARE MET:

A. THE CABINETRY CAN BE REMOVED WITHOUT THE USE OF SPECIALIZED KNOWLEDGE OR SPECIALIZED TOOLS AND WITHOUT REMOVAL OR REPLACEMENT OF THE FIXTURE.
B. THE FINISH FLOOR EXTENDS UNDER THE CABINETRY, AND
C. THE WALLS BEHIND AND SURROUNDING THE CABINETRY ARE FINISHED.

RESTROOM RES. LAVATORY (CBC 11A) D

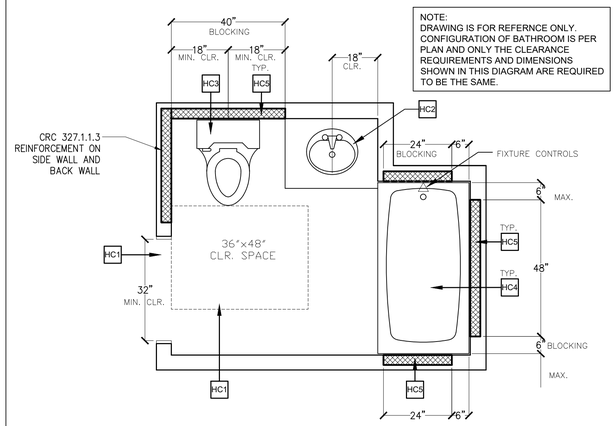

NOTE:
DRAWING IS FOR REFERNCE ONLY. CONFIGURATION OF BATHROOM IS PER PLAN AND ONLY THE CLEARANCE REQUIREMENTS AND DIMENSIONS SHOWN IN THIS DIAGRAM ARE REQUIRED TO BE THE SAME.

EXAMPLE AGING IN PLACE BATHROOM (CBC 11A) A

RESIDENTIAL UNIT BATHROOM DISABLED ACCESS REQUIREMENT NOTES (SINGLE BATHROOM OPTION)

1. ADAPTABLE BATHING AND TOILET FACILITIES OR POWDER ROOMS SHALL PROVIDE A SUFFICIENT MANEUVERING SPACE. AT LEAST 30 INCHES BY 48 INCHES. FOR A PERSON USING A WHEELCHAIR OR OTHER MOBILITY AID TO ENTER AND CLOSE THE DOOR. USE THE FIXTURES. REOPEN THE DOOR AND EXIT. THE MANEUVERING SPACE MAY INCLUDE ANY KNEE SPACE OR TOE SPACE. (SEC. 1134A.4)
2. IF A DOOR IS PROVIDED TO A BATHROOM OR POWDER ROOM REQUIRED TO BE ACCESSIBLE, IT SHALL HAVE MANEUVERING CLEARANCE AND STRIKE EDGE DISTANCES. (SEC. 1132A.5.2)
3. THE MINIMUM FLOOR SPACE PROVIDED AT A WATER CLOSET SHALL BE 48 INCHES IN CLEAR WIDTH. THE CLEAR FLOOR SPACE SHALL EXTEND PAST THE FRONT EDGE OF THE WATER CLOSET AT LEAST 36 INCHES. (SEC. 1134A.7-1)
4. THE MINIMUM HEIGHT OF WATER CLOSET SEATS SHALL BE 15 INCHES ABOVE THE FLOOR. (SEC. 1134A.7-3)
5. WATER CLOSET CONTROLS SHALL BE MOUNTED NO MORE THAN 44 INCHES ABOVE THE FLOOR THE FORCE REQUIRED TO ACTIVATE CONTROLS SHALL BE NO GREATER THAN 5 POUND-FORCE (22.2 N). (PER CBC 2022)
6. BATHROOMS OR POWDER ROOMS REQUIRED TO BE ACCESSIBLE SHALL HAVE AT LEAST ONE ACCESSIBLE LAVATORY. WHERE MIRRORS OR TOWEL FIXTURES ARE PROVIDED, AT LEAST ONE OF EACH SHALL BE MOUNTED WITH THE BOTTOM EDGE NO HIGHER THAN 40 INCHES (1016 MM) FROM THE FLOOR. (PER CBC 2022)
7. VANITIES AND LAVATORIES SHALL BE INSTALLED WITH THE CENTERLINE OF THE FIXTURE A MINIMUM OF 18 INCHES HORIZONTALLY FROM AN ADJOINING WALL OR FIXTURE TO ALLOW FOR FORWARD APPROACH. WHEN PARALLEL APPROACH IS PROVIDED, LAVATORIES SHALL BE INSTALLED WITH THE CENTERLINE OF THE FIXTURE A MINIMUM OF 24 INCHES (610 MM) HORIZONTALLY FROM AN ADJOINING WALL OR FIXTURE. THE TOP OF THE FIXTURE RIM SHALL BE A MAXIMUM OF 34 INCHES (864 MM) ABOVE THE FINISHED FLOOR. (PER CBC 2022).

   MIRROR AND TOWEL FIXTURES SHALL BE MOUNTED WITH THE BOTTOM EDGE NO HIGHER THAN 40 INCHES FROM THE FLOOR.
8. A CLEAR MANEUVERING SPACE AT LEAST 30 INCHES BY 48 INCHES SHALL BE PROVIDED AT LAVATORIES AND SHALL BE CENTERED ON THE LAVATORY. (PER CBC 2022)
9. CABINETS UNDER LAVATORIES ARE ACCEPTABLE PROVIDED THE BATHROOM HAS SPACE TO ALLOW A PARALLEL APPROACH BY A PERSON IN A WHEELCHAIR AND THE LAVATORY CABINETS ARE DESIGNED WITH ADAPTABLE KNEE AND TOE SPACE PER SECTION 1134A.8.
10. THE KNEE SPACE SHALL BE AT LEAST 30 INCHES (762 MM) WIDE AND 8 INCHES DEEP, AT LEAST 29 INCHES HIGH AT THE FRONT FACE, REDUCING TO NOT LESS THAN 27 INCHES AT A POINT 8 INCHES BACK FROM THE FRONT EDGE (SEC. 1134A.8)
11. THE KNEE AND TOE SPACE REQUIRED FOR A SINK SHALL BE PROVIDED BY ONE OF THE FOLLOWING:

    -THE SPACE BENEATH THE LAVATORY SHALL BE LEFT CLEAR AND UNOBSTRUCTED.

    -ANY CABINET BENEATH THE LAVATORY SHALL BE REMOVABLE WITHOUT THE USE OF SPECIALIZED KNOWLEDGE OR SPECIALIZED TOOLS OR. DOORS TO THE CABINET BENEATH THE LAVATORY SHALL BE REMOVABLE OR OPENABLE TO PROVIDE THE REQUIRED UNOBSTRUCTED KNEE AND TOE SPACE. (SEC. 1134A.8)
12. THE TOE SPACE REQUIRED UNDER SINKS SHALL BE AT LEAST 30 INCHES WIDE CENTERED ON THE LAVATORY, AT LEAST 17 INCHES DEEP, MEASURED FROM THE FRONT EDGE AND AT LEAST 9 INCHES HIGH FROM THE FLOOR. (SEC. 1134A.8)
13. THE FINISHED FLOOR BENEATH THE LAVATORY SHALL BE EXTENDED TO THE WALL. (SEC. 1134A.8)
14. HOT WATER AND DRAIN PIPES EXPOSED UNDER LAVATORIES SHALL BE INSULATED OR OTHERWISE COVERED. THERE SHALL BE NO SHARP OR ABRASIVE SURFACES UNDER LAVATORIES (SEC. 1134A.8)
15. FAUCET CONTROLS AND OPERATION MECHANISMS SHALL BE OPERABLE WITH ONE HAND AND SHALL NOT REQUIRE TIGHT GRASPING, PINCHING OR TWISTING OF THE WRIST. THE FORCE REQUIRED TO ACTIVATE CONTROLS SHALL BE NO GREATER THAN 5 POUND-FORCE (22.2 N). SELF CLOSING VALVES SHALL REMAIN OPEN FOR AT LEAST 10 SECONDS.
16. WATER CLOSETS SHALL BE LOCATED WITHIN BATHROOMS IN A MANNER THAT PERMITS A GRAB BAR TO BE INSTALLED ON ONE SIDE OF THE FIXTURE. IN LOCATIONS WHERE WATER CLOSETS ARE ADJACENT TO WALLS OR BATHTUBS, THE CENTERLINE OF THE FIXTURE SHALL BE A MINIMUM OF 18 INCHES FROM THE OBSTACLE. THE OTHER (NON GRAB BAR) SIDE OF THE WATER CLOSET SHALL BE A MINIMUM OF 18 INCHES FROM THE CENTERLINE OF THE FIXTURE TO THE FINISHED SURFACE OF ADJOINING WALLS, VANITIES OR FROM THE EDGE OF A LAVATORY. (SEC. 1134A.7)
17. PROVIDE NOMINAL 6 INCH HIGH REINFORCEMENT ON BOTH SIDES OR ONE SIDE AND REAR OF WATER CLOSETS PLACED ADJACENT TO A SIDE WALL. INSTALL REINFORCEMENT BETWEEN 32 AND 38 INCHES ABOVE THE FLOOR. REAR BACKING SHALL BE AT LEAST 40 INCHES LONG. SIDE REINFORCEMENT SHALL BE A MAXIMUM OF 12 INCHES FROM THE REAR WALL EXTENDING A MINIMUM OF 26 INCHES IN FRONT OF THE WATER CLOSET. IF WATER CLOSETS ARE NOT PLACED ADJACENT TO A SIDE WALL, PROVIDE FOR INSTALLATION OF FLOOR-MOUNTED, FOLDAWAY OR SIMILAR ALTERNATIVE GRAB BARS. (SEC. 1134A.7)
18. GRAB BARS, IF PROVIDED IN MULTIFAMILY UNITS, SHALL BE 11/4 INCHES TO 1112 INCHES IN DIAMETER, MOUNTED 11/2 INCHES CLEAR FROM THE WALL, CANNOT ROTATE IN THEIR FITTINGS, AND BE DESIGNED TO SUPPORT AT LEAST A 250 LB. LOAD. (SEC. 1134A.7)
19. SWITCHES, OUTLETS AND CONTROLS FOR BATHROOMS AND POWDER ROOMS SHALL COMPLY WITH SECTION 1142A.
20. ON THE SIDE OF A BATHTUB OR BATHTUB-SHOWER COMBINATION THERE SHALL BE A MINIMUM CLEAR FLOOR SPACE 48 INCHES PARALLEL BY 30 INCHES PERPENDICULAR (1219 MM BY 762 MM) (MEASURED AT THE FOOT OR DRAIN END OF THE BATHTUB) TO PROVIDE FOR THE MANEUVERING OF A WHEELCHAIR AND TRANSFER TO AND FROM THE BATHING FACILITY. THE AREA UNDER A LAVATORY MAY BE INCLUDED IN THE CLEAR FLOOR SPACE, PROVIDED THE KNEE AND TOE SPACE COMPLY WITH SECTION 1134A.8. CABINETS UNDER LAVATORIES AND TOILETS SHALL NOT ENCROACH INTO THE CLEAR FLOOR SPACE. (SECTIONS 1134A.2 AND 1134A.5-1)
21. BATHTUB FAUCET CONTROLS AND OPERATION MECHANISMS SHALL BE OPERABLE WITH ONE HAND AND SHALL NOT REQUIRE FIGHT GRASPING, PINCHING OR TWISTING OF THE WRIST. THE FORCE REQUIRED TO ACTIVATE CONTROLS SHALL BE NO GREATER THAN 5 POUND-FORCE (22.2 N). LEVER OPERATED, PUSH-TYPE AND ELECTRONICALLY CONTROLLED MECHANISMS ARE EXAMPLES OF ACCEPTABLE DESIGNS. (SECTIONS 1134A.2 AND 1134A.5-3)
22. BATHTUB OR SHOWER ENCLOSURES IF PROVIDED, SHALL BE FULLY TEMPERED, LAMINATED SAFETY GLASS OR APPROVED PLASTIC. WHEN GLASS IS USED, IT SHALL HAVE MINIMUM THICKNESS OF NOT LESS THAN 1/8 INCH WHEN FULLY TEMPERED, OR 1/4 INCH WHEN LAMINATED, AND SHALL PASS THE TEST REQUIREMENTS OF THIS PART, CHAPTER 24 GLASS AND GLAZING. PLASTICS USED IN DOORS AND PANELS OF SHOWERS ENCLOSURES SHALL BE OF A SHATTER-RESISTANT TYPE. HINGED SHOWER DOORS SHALL OPEN OUTWARD. (SECTIONS 1134A.2 AND 1134A.5-5)
23. FAUCET CONTROLS AND OPERATION MECHANISMS SHALL BE OPERABLE WITH ONE HAND AND SHALL NOT REQUIRE TIGHT GRASPING, PINCHING OR TWISTING OF THE WRIST. THE FORCE REQUIRED TO ACTIVATE CONTROLS SHALL BE NO GREATER THAN 5 POUND-FORCE (22.2 N). LEVER OPERATED, PUSH-TYPE AND ELECTRONICALLY CONTROLLED MECHANISMS ARE EXAMPLES OF ACCEPTABLE DESIGNS. (SECTIONS 1134A.2, 1134A.5-3, 1134A.6-5 AND 1134A.807)
24. INSTALL GRAB BAR REINFORCEMENTS AT EACH END OF A BATHTUB, 32 TO 38 INCHES ABOVE THE FLOOR, STARTING AT THE FRONT FACE OF THE TUB EXTENDING 24 INCHES MINIMUM TO THE BACK FOR BATHTUBS WITH SURROUNDING WALLS. PROVIDE GRAB BAR REINFORCEMENTS AT THE BATHTUB BACK WALL STARTING WITHIN 6 INCHES ABOVE THE BATHTUB RIM, EXTENDING UP TO AT LEAST 38 INCHES ABOVE THE FLOOR, AND EXTENDING HORIZONTALLY TO WITHIN 6 INCHES OF THE END WALLS. BATHTUBS WITHOUT SURROUNDING WALLS IN MULTIFAMILY UNITS SHALL HAVE REINFORCING INSTALLED FOR FLOOR MOUNTED GRAB BARS. (SEC. 1134A.5-2)
25. GRAB BAR REINFORCEMENT SHALL BE INSTALLED CONTINUOUS IN THE WALLS OF SHOWERS 32 INCHES TO 38 INCHES ABOVE THE FLOOR. THE GRAB BAR REINFORCEMENT SHALL BE A MINIMUM OF 6 INCHES (152.4 MM) NOMINAL IN HEIGHT. GLASS-WALLED SHOWER STALLS SHALL PROVIDE REINFORCEMENT FOR INSTALLATION OF FLOOR-MOUNTED OR CEILING-MOUNTED GRAB BARS. (SEC. 1134A.6-3)
26. ELECTRICAL RECEPTACLES, SWITCHES, CONTROLS: IF THE REACH FOR A SWITCH OR OUTLET IS OVER AN OBSTRUCTION BETWEEN 20 AND 25 INCHES IN DEPTH, THE MAXIMUM HEIGHT IS REDUCED TO 44 INCHES FOR SIDE APPROACH PROVIDED THE OBSTRUCTION IS NO MORE THAN 24 INCHES IN DEPTH. OBSTRUCTIONS SHALL NOT EXTEND MORE THAN 25 INCHES FROM THE WALL BENEATH A CONTROL. (SECTIONS 406.3 OF THE CALIFORNIA ELECTRIC CODE, 1136A.1, 1136A.2, 1142A.1 AND 1142A.2-2 OF THE CBC 2022)
27. PROVIDE AND SHOW ON PLAN KITCHENS WITHIN THE COVERED MULTIFAMILY DWELLING UNITS COMPLYING WITH CLEAR FLOOR SPACE, REMOVABLE BASE CABINETS, COUNTERTOPS, REPOSITIONABLE COUNTERTOPS, LOWER SHELVING, SINK FAUCET CONTROLS, KNEE AND TOE SPACES, AND PLUMBING PROTECTION SPECIFICATIONS OF SECTION 1133A.

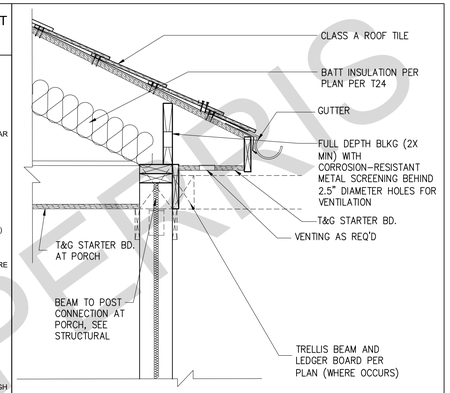

1 EAVE AT TRADITIONAL
SCALE: 1"=1'-0"

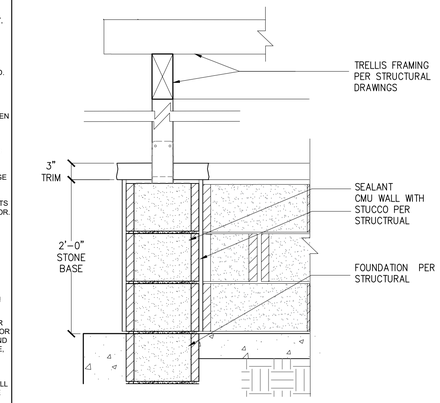

2 TRELLIS POST AT CMU WALL – SPANISH
SCALE: 1"=1'-0"

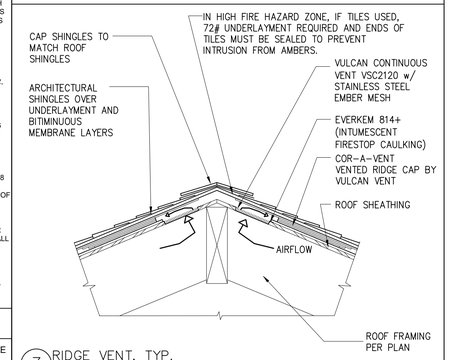

3 RIDGE VENT, TYP.
SCALE: 1"=1'-0"

DOORBELL BUTTONS REQUIREMENTS

CRC R327.1.4

DOORBELL BUTTONS OR CONTROLS, WHEN INSTALLED, SHALL NOT EXCEED 48 INCHES ABOVE EXTERIOR FLOOR OR LANDING, MEASURED FROM THE TOP OF THE DOORBELL ASSEMBLY. WHERE DOORBELL BUTTONS INTEGRATED WITH OTHER FEATURES ARE REQUIRED TO BE INSTALLED ABOVE 48 INCHES MEASURED FROM THE EXTERIOR FLOOR OR LANDING, A STANDARD DOORBELL BUTTON OR CONTROL SHALL ALSO BE PROVIDED AT A HEIGHT NOT EXCEEDING 48 INCHES ABOVE EXTERIOR FLOOR OR LANDING, MEASURED FROM THE TOP OF THE DOORBELL BUTTON OR CONTROL.

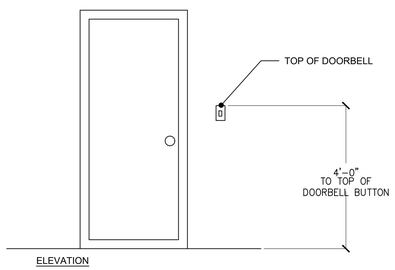

DOORBELL BUTTONS (R327.1.4) E

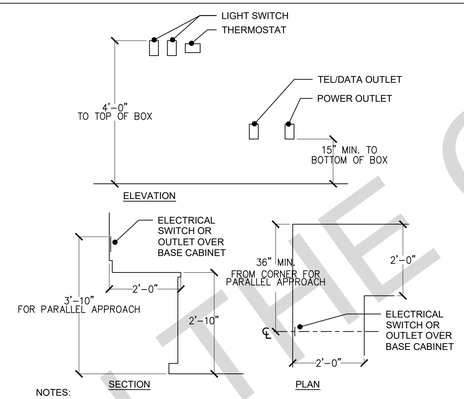

NOTES:
LOCATE ELECTRICAL OUTLETS, SWITCHES AND CONTROLS WITHIN ADAPTABLE DWELLING UNITS TO COMPLY WITH CBC SEC. 1136A.1&2, WITHIN COMMON AREAS FOR RESIDENT USE PER CBC SEC. 1142A.1&2 AND WITHIN COMMON AREAS FOR PUBLIC USE PER CBC SEC. 11B-308.

DWELLING UNIT SWITCH LOCATIONS (R327.1.2) B

MANEUVERING BATHROOM KEYNOTES

HC1	AT LEAST ONE BATHROOM AND ONE BEDROOM ON THE ENTRY LEVEL SHALL PROVIDE A DOORWAY WITH A NET CLEAR OPENING OF NOT LESS THAN 32", MEASURED WITH THE DOOR POSITIONED AT AN ANGLE OF 90 DEGREES FROM THE CLOSED POSITION.
HC2	MANEUVERABLE LAVATORY PER PLAN W/ A REMOVABLE BASE CABINET. FOR LAVATORY ACCESSIBILITY REQUIREMENTS SEE NOTES UNDER THE "RESIDENTIAL UNIT MANEUVERING BATHROOM NOTES."
HC3	MANEUVERABLE WATER CLOSET PER PLAN. FOR WATER CLOSET ACCESSIBILITY REQUIREMENTS SEE NOTES UNDER THE "RESIDENTIAL UNIT MANEUVERING BATHROOM NOTES."
HC4	MANEUVERABLE 60"L (MIN.) TUB/SHOWER COMBINATION PER PLAN. FOR TUB/SHOWER ACCESSIBILITY REQUIREMENTS SEE NOTES UNDER THE "RESIDENTIAL UNIT MANEUVERING BATHROOM NOTES."
HC5	REINFORCED 2x8 BLOCKING IN WALL FOR FUTURE GRAB BARS. (CRC R327.1.1.2)
HC6	MINIMUM 48"x36" CLEAR MANEUVERING SPACE PERPENDICULAR TO THE SIDE OF THE BATHTUB/SHOWER COMBO FLUSH AT THE FOOT OF THE TUB/SHOWER WALL WITH CONTROLS.
HC7	MINIMUM 48"x30" CLEAR MANEUVERING SPACE CENTERED AT THE LAVATORY. CLEAR SPACE SHALL BE ALLOWED TO ENCROACH THE UNDERSIDE OF THE LAVATORY WITH A REMOVABLE BASE CABINET

ACCESSIBILITY REQUIREMENTS FOR RECEPTACLES AND SWITCHES

1. IF THE REACH FOR A SWITCH OR OUTLET IS OVER AN OBSTRUCTION BETWEEN 20 AND 25 INCHES (508 AND 635 MM) IN DEPTH, THE MAXIMUM HEIGHT IS REDUCED TO 44 INCHES (1116 MM) FOR FORWARD APPROACH, OR 46 INCHES (1168 MM) FOR SIDE APPROACH PROVIDED THE OBSTRUCTION IS NO MORE THAN 24 INCHES (610 MM) IN DEPTH. OBSTRUCTIONS SHALL NOT EXTEND MORE THAN 25 INCHES (635 MM) FROM THE WALL BENEATH A CONTROL. (PER CEC AND CBC 2022)
2. RECEPTACLE HEIGHTS: ELECTRICAL RECEPTACLE OUTLETS ON BRANCH CIRCUIT OF 30 AMPERES OR LESS AND COMMUNICATION SYSTEM RECEPTACLES SHALL BE LOCATED NO HIGHER THAN 48 INCHES MEASURED FROM THE TOP OF THE OUTLET BOX AND NO LOWER THAN 15 INCHES MEASURED FROM THE BOTTOM OF THE OUTLET BOX TO THE LEVEL OF THE FINISHED FLOOR OR WORKING PLATFORM. IF THE REACH IS OVER A PHYSICAL BARRIER OR AN OBSTRUCTION (FOR EXAMPLE, A KITCHEN BASE CABINET), RECEPTACLES SHALL BE LOCATED WITHIN THE REACH RANGES SPECIFIED IN SECTION 1138A.3 PER THE CBC 2022.
3. SWITCH AND CONTROL HEIGHTS: THE TOP OF THE OUTLET BOX FOR SWITCHES USED TO CONTROL LIGHTING, THERMOSTATS, AND OTHER ENVIRONMENTAL CONTROLS SHALL BE LOCATED NO HIGHER THAN 48 INCHES (1219 MM) AND NO LOWER THAN 15 INCHES (381 MM) MEASURED FROM THE BOTTOM OF THE OUTLET BOX TO THE LEVEL OF THE FINISHED FLOOR OR WORKING PLATFORM. (SEC. 1136A.2)
4. THE CENTER OF FIRE ALARM INITIATING DEVICES SHALL BE LOCATED 48 INCHES ABOVE THE LEVEL OF THE FLOOR, WORKING PLATFORM, GROUND SURFACE, OR SIDEWALK. (PER CEC 2022)

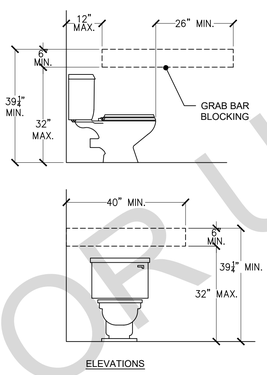

NOTES:
WHERE WATER CLOSETS ARE NOT PLACED ADJACENT TO A SIDE WALL, PROVIDE FOR INSTALLATION OF FLOOR-MOUNTED, FOLDAWAY OR SIMILAR ALTERNATIVE GRAB BARS. (SEC. 1134A.7.2)

IN LOCATIONS WHERE WATER CLOSETS ARE ADJACENT TO NON-GRAB BAR WALLS, VANITIES, LAVATORIES OR BATHTUBS, THE CENTERLINE OF THE FIXTURE SHALL BE A MINIMUM OF 18 INCHES FROM THE OBSTACLE. (SEC. 1134A.7.1)

WATER CLOSET CONTROLS SHALL BE MOUNTED NO MORE THAN 44 INCHES ABOVE THE FLOOR. THE FORCE TO ACTIVATE CONTROLS SHALL BE NO GREATER THAN 5 POUNDS. (SEC. 1134A.7.4)

RESTROOM RES. WATER CLOSET (CBC 11A) F

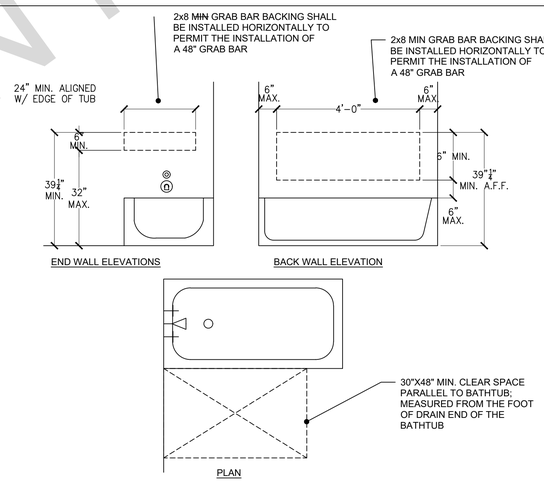

RESTROOM RES. BATHTUB/SHOWER (R327.1.1) C

FOR USE IN IN THE CITY OF PERRIS

DESIGN PATH STUDIO
architecture + engineering + planning
DESIGNPATHSTUDIO.COM

BY USING THESE PERMIT READY CONSTRUCTION DOCUMENTS, THE RECIPIENT ACKNOWLEDGES, ACCEPTS AND VOLUNTARILY AFFIRMS THE FOLLOWING CONDITIONS:
1. THE USE OF THIS INFORMATION IS RESTRICTED TO THE ORIGINAL PROJECT FOR WHICH IT WAS PREPARED FOR THE PERMIT READY ACCESSORY DWELLING UNIT (ADU) PROGRAM FOR THE CITY OF PERRIS ONLY. THIS IS A LIMITED SET OF STANDARDIZED ADU PLANS AND SPECIFICATIONS APPROVED BY THE CITY OF PERRIS BUILDING DEPARTMENT. BUILDING CODES DO CHANGE OVER TIME AND RECIPIENT SHALL ENSURE FULL COMPLIANCE UNDER ALL CODES THEN IN EFFECT AT THE TIME OF THE SUBJECT PERMIT. THIS DOES NOT ELIMINATE OR REDUCE THE RECIPIENT'S RESPONSIBILITY TO VERIFY ANY AND ALL INFORMATION RELEVANT TO THE RECIPIENT'S WORK AND RESPONSIBILITY ON THIS PROJECT. DESIGN PATH STUDIO SHALL NOT BE RESPONSIBLE FOR TRANSLATION ERRORS. DO NOT USE THESE CONSTRUCTION DOCUMENTS IF THE PERMIT HAS EXPIRED OR IS REVOKED AT ALL.
2. THE RECIPIENT RECOGNIZES AND ACKNOWLEDGES THAT THE USE OF THIS INFORMATION WILL BE AT THEIR SOLE RISK AND WITHOUT ANY LIABILITY OR LEGAL EXPOSURE TO DESIGN PATH STUDIO. NO WARRANTIES OF ANY NATURE, WHETHER EXPRESS OR IMPLIED, SHALL ATTACH TO THESE DOCUMENTS AND THE INFORMATION CONTAINED THEREON. ANY USE, REUSE, OR ALTERATION OF THESE DOCUMENTS BY THE RECIPIENT OR BY OTHERS WILL BE AT THE RECIPIENT'S RISK AND FULL LEGAL RESPONSIBILITY. FURTHERMORE, THE RECIPIENT WILL, TO THE FULLEST EXTENT PERMITTED BY LAW, DEFEND, INDEMNIFY AND HOLD DESIGN PATH STUDIO AND ITS ARCHITECTS HARMLESS FROM ANY AND ALL CLAIMS, SUITS, LIABILITY, DEMANDS, JUDGMENTS, OR COSTS ARISING OUT OF OR RESULTING THERE FROM ANY USE OF THESE CONSTRUCTION DOCUMENTS FOR OR ON ACCOUNT OF ANY INJURY, DEATH, DAMAGE OR LOSS TO PERSONS OR PROPERTY, DIRECT OR CONSEQUENTIAL DAMAGES IN ANY AMOUNT. THIS INDEMNITY DOES NOT APPLY TO THE SOLE NEGLIGENCE OR WILLFUL MISCONDUCT OF DESIGN PATH STUDIO OR ITS ARCHITECTS.
3. THE DESIGNS REPRESENTED BY THESE PLANS ARE COPYRIGHTED AND ARE SUBJECT TO COPYRIGHT PROTECTION.
4. IF THE RECIPIENT DOES NOT AGREE WITH THE ABOVE CONDITIONS, DO NOT PROCEED WITH CONSTRUCTION OF AN ADU OR OTHER IMPROVEMENT UNDER THESE PLANS AT ALL.

project
City of Perris
Pre-Approved
ADU Program

revisions
01

description
Architectural
Details

date	4 April 2025
project no.	PERRIS PRADU
drawn by	DESIGN PATH STUDIO
sheet no.	A5.3

2. CONCRETE FOUNDATION CONSTRUCTION

200. THE FIELD INSPECTOR SHALL VERIFY FOUNDATION REQUIREMENTS DURING FOUNDATION INSPECTION.

201. CONCRETE STRENGTH SHALL BE NO LESS THAN 2,500 PSI @ 28 DAYS, OR HIGHER STRENGTH IF NOTED ON THE PLANS.

202. SLAB REINFORCEMENT & FOOTINGS SHALL BE PER STRUCTURAL DETAILS ON SHEET S5, CENTERED IN SLAB.

203. REINFORCING BARS TO BE GRADE 40 FOR #3 BARS, GRADE 60 FOR #4 BARS & LARGER

204. PROVIDE WEAKENED PLANE JOINTS FOR CRACK CONTROL (SAWCUT OR TOOLED JOINT) AT 14'-0" O/C MAX.

205. SILL ANCHORAGE AT ALL SHEARWALL LOCATIONS SHALL BE PER THE SHEARWALL SCHEDULE. ALL SHEARWALL ANCHOR BOLTS SHALL RECEIVE A 3" SQUARE X 0.229" THICK WASHER. THE WASHER MAY BE DIAGONALLY SLOTTED (WIDTH >= BOLT DIAMETER + $\frac{3}{16}$", LENGTH<=1$\frac{3}{4}$") PROVIDED THAT A STANDARD CUT WASHER IS USED ON TOP OF THE SQUARE WASHER. SHEARWALL ANCHORS SHALL BE PLACED A MIN. OF 1 $\frac{3}{4}$" FROM THE EDGE OF CONCRETE.

206. EMBEDDED SILL ANCHOR BOLTS AT TYPICAL NON-SHEARWALL CONDITIONS SHALL BE $\frac{5}{8}$" DIA. MIN. ANCHOR BOLTS WITH A STANDARD CUT WASHER. SPACING SHALL NOT EXCEED 48 INCHES O/C. LOCATE AN ANCHOR BOLT NOT MORE THAN 9 INCHES, OR LESS THAN 4" FROM ENDS AND SPLICES. EACH SILL SHALL HAVE (2) SILL BOLTS MIN.

207. ANCHOR BOLTS SHALL BE EMBEDDED A MIN. OF 7 INCHES INTO CONCRETE. IN A TWO-POUR SYSTEM, ANCHOR BOLTS TO BE EMBEDDED 5 INCHES MIN. INTO FIRST POUR.

208. SEE WOOD FRAMING CONSTRUCTION NOTES FOR ALTERNATE SILL ANCHORAGE.

209. ALL HOLDOWNS SHALL BE PLACED A MINIMUM DIM AS SHOWN IN DETAIL 3&4/S5 FROM EXTERIOR CORNER OF SLAB.

210. VERIFY ALL DIMENSIONS WITH ARCHITECTURAL DRAWINGS. SUBCONTRACTOR TO VERIFY ALL DIMENSIONS PRIOR TO CONSTRUCTION. IMMEDIATELY NOTIFY HOMEOWNER AND CITY OF PERRIS OF ANY DISCREPANCY, TYPICAL.

211. PROVIDE A UFER GROUND FOR ELECTRICAL SYSTEM PER ARTICLE 250.52 N.E.C.

212. ALL SURROUNDING FLAT WORK SHALL BE VERIFIED WITH HOMEOWNER FOR LOCATION AND AMOUNT TO BE POURED.

213. RETROFIT MISPLACED HOLDOWNS AS NOTED BELOW. AT EPOXY ANCHORS USE SIMPSON SET-XP EPOXY PER MANUFACTURERS INSTALLATION REQUIREMENTS AS FOLLOWS:

MISPLACED HOLDOWN	RETROFIT BOLT	REPLACEMENT HARDWARE
LSTHD8, HTT4	$\frac{5}{8}$" ALL-THREAD, EMBED 9"	HTT4
STHD10, STHD14, HTT5	$\frac{5}{8}$" ALL-THREAD, EMBED 9"	HTT5
LTT20B	$\frac{5}{8}$" ALL-THREAD, EMBED 7"	LTT20B
LTT20B	ATTACH TO EXISTING A.B.	LTT20B
HDU8	$\frac{7}{8}$" ALL-THREAD, EMBED 15"	HDU8

214. RETROFIT $\frac{3}{4}$" & $\frac{5}{8}$" EMBEDDED ANCHOR BOLTS AS NOTED BELOW. AT EPOXY ANCHORS USE SIMPSON SET-XP EPOXY PER SIMPSON'S INSTALLATION REQUIREMENTS.

LOCATION	TYPE	REPLACEMENT
SLAB EDGE, 1 3/4" DIST.	SHEARWALL	$\frac{5}{8}$" ALL-THREAD, EPOXY, EMBED 3" OR $\frac{5}{8}$" TITEN HD, EMBED 3" MIN.
INTERIOR > 6," EDGE DIST.	SHEARWALL OR NON-SHEAR	$\frac{5}{8}$" TITEN HD, EMBED 3" MIN.
ANY OTHER	NON-SHEAR	0.145 DIA. SHOT PINS SPACED 4 INCHES APART ON SILL. (2) FOR EACH MISSING ANCHOR BOLT. MAX. OF (6) SHOT PINS EVERY 6 FT.

215. WHEN REQUESTING A BUILDING DEPARTMENT FOUNDATION INSPECTION, HAVE CONTRACTOR DOCUMENTATION IN WRITING FOR THE FOLLOWING:
   A) THE PAD WAS PREPARED IN ACCORDANCE WITH THE SITE REQUIREMENTS AND CITY OF PERRIS APPROVAL.
   B) THE UTILITY TRENCHES HAVE BEEN PROPERLY BACKFILLED & COMPACTED.
   C) THE FOUNDATION EXCAVATIONS, EXPANSIVE CHARACTERISTICS AND BEARING CAPACITY COMPLIES WITH THE CITY OF PERRIS RECOMMENDATIONS .

216. ALL HOLDOWN ANCHORS & HARDWARE MUST BE TIED IN PLACE PRIOR TO CALLING FOR A FOUNDATION INSPECTION.

3. WOOD FRAMING CONSTRUCTION

300. ROOFING MATERIALS SHALL BE PER ARCHITECTURAL DRAWINGS.

301. ROOF SHEATHING SHALL BE $\frac{19}{32}$" OR $\frac{5}{8}$" C-D GRADE, INTERIOR TYPE PLYWOOD WITH EXTERIOR GLUE, OR OSB PANELS. IDENTIFICATION INDEX (24/0) W/ 10D COMMON NAILS @ 6" O/C @ ALL PERIMETER EDGES AND ALL INTERIOR SUPPORTED EDGES AND @ 12" O/C @ ALL INTERMEDIATE SUPPORTS. SEE DETAILS FOR SHEAR AND DRAG NAILING.

302. TYPICAL WALL SHEATHING:
INTERIOR SURFACES: WHERE DRYWALL IS SPECIFIED, PROVIDE MIN. $\frac{5}{8}$" GYPSUM WALLBOARD W/ 5D COOLER NAILS OR EQUAL @ 6" O/C TO ALL STUDS AND TO TOP & BOTTOM PLATES (UNBLOCKED) AT INTERIOR SIDE OF EXTERIOR WALLS AND AT BOTH SIDES OF ALL INTERIOR WALLS.

EXTERIOR SURFACES: SEE PLANS. WHERE "STUCCO" IS SPECIFIED PROVIDE $\frac{7}{8}$" EXTERIOR CEMENT PLASTER OVER WIRE LATH OVER TYPE 15 BUILDING PAPER. LATH ATTACHED TO ALL STUDS AND TOP AND BOTTOM PLATES (OR BLOCKING AS OCCURS) W/ 16 GAGE X $\frac{7}{16}$" STAPLES @ 6" O/C OR NO. 11 GAGE X 1-1/2" FURRING NAILS WHERE INDICATED ON ELEVATIONS.

303. STRUCTURAL SHEATHING MAY BE EITHER OSB OR PLYWOOD. ANY NOTES REFERRING TO PLYWOOD ALSO APPLIES TO OSB. SHEATHING (WOOD STRUCTURAL PANELS) MUST MEET THE REQUIREMENTS OF DOC PS1 OR PS2 IN ACCORDANCE WITH NDS SDPWS.

304. TOP PLATES SHALL BE DOUBLE 2X W/ WIDTH EQUAL TO STUDS BELOW, W/ (21)16D NAILS MIN. @ MINIMUM 4'-0" LAP SPLICES. USE SIMPSON RPS OR CS16 STRAP EACH SIDE OR ONE SIDE AND TOP WHERE LAP SPLICE IS NOT POSSIBLE. SEE DETAILS FOR NOTCHES, CUT-OUTS AND COMPLETE PLATE BREAKS AT HEATING, VENTING, AND PLUMBING.

3. WOOD FRAMING CONSTRUCTION (CONT.)

305. TYPICAL SHEAR TRANSFER:
ROOF TO WALL: CONNECT ROOF FRAMING TO TOP PLATE W/ SIMPSON H1 @ 24" O/C OR A35 OR RBC @ 24" O/C OR PER SHEAR TRANSFER DETAILS.

SILL PLATE ANCHORS:

306. GROUND FLOOR / SLAB ON GRADE WALLS: PROVIDE 2X (MIN.) PTDF SILL PLATES. SEE CONCRETE FOUNDATION CONSTRUCTION NOTES 206, 207 & 208 FOR ANCHOR BOLTS. AT INTERIOR NON-SHEAR CONDITIONS, 0.145 SHOT PIN ANCHORS @ 32" O/C MAY BE USED TO CONNECT PARTITIONS AND BEARING WALLS TO SLAB.

307. ALL WOOD SILL PLATES AND ALL WOOD MEMBERS DIRECTLY AGAINST CONCRETE OR MASONRY SHALL BE FOUNDATION GRADE REDWOOD SILLS OR PTDF SILLS, TREATED WITH SODIUM BORATE (SBX/DOT) WHEN INSTALLED IN A DRY OR ENCLOSED ENVIRONMENT. (SODIUM BORATE TREATMENT DOES NOT REQUIRE CORROSION RESISTANT CONNECTORS.) IF OTHER TREATMENTS ARE USED, SEE NOTE 309.

308. FASTENERS IN CONTACT WITH PRESSURE TREATED WOOD:
ALL NAILS AND FASTENERS IN CONTACT WITH PRESSURE TREATED LUMBER TREATED WITH ACQ-C, ACQ-D, CA-B, AND CBA-A WITHOUT AMMONIA SHALL BE GALVANIZED PER ASTM A153.

ALL NAILS AND FASTENERS IN CONTACT WITH PRESSURE TREATED LUMBER TREATED WITH ACQ-C, ACQ-D, CA-B, AND CBA-A WITH AMMONIA SHALL BE TYPE 303, 304, 305, OR 316 STAINLESS STEEL.

WHERE PRESSURE TREATED LUMBER IS INSTALLED IN AN EXTERIOR WET ENVIRONMENT, ALL NAILS AND FASTENERS IN CONTACT WITH THE PRESSURE TREATED LUMBER SHALL BE TYPE 303, 304, 305, OR 316 STAINLESS STEEL.

309. RE-TIGHTEN ALL HOLDOWN ANCHORS JUST PRIOR TO COVERING THE WALL FRAMING.

310. ENGINEERED BEAMS ARE AS FOLLOWS:
"PSL" REFERS TO PARALLEL STRAND LUMBER (E=2.0, FB=2900).
"LSL" REFERS TO LAMINATED STRAND LUMBER (E=1.55, FB=2325).
(E=1.3 & FB=1700 AT LSL CONDITIONS WITH D (DEPTH) < 9")
"LVL" REFERS TO LAMINATED VENEER LUMBER (E=2.0, FB=2800).
"GLB" REFERS TO 24F-1.8E GLU-LAM WITH STANDARD CAMBER, U.N.O.
"IJC" ENGINEERED GLU-LAM BEAM MAY BE USED UPON ENGINEER APPROVALS.
AN A.I.T.C CERTIFICATE OF COMPLIANCE ISSUED BY A CURRENT ICC APPROVED QUALITY CONTROL AGENCY FOR GLUED LAMINATED WOOD MEMBERS SHALL BE GIVEN TO THE BUILDING INSPECTOR PRIOR TO INSTALLATION.

311. LUMBER SPECIFICATIONS:
ALL FRAMING LUMBER SHALL BE DOUGLAS FIR-LARCH. STUDS, PLATES & BLOCKING:

2X4 FRAMING LUMBER NOT LISTED BELOW	STANDARD GRADE OR BETTER
92-1/4", 104-1/4", & 116-1/4" 2X4 STUDS	STUD GRADE OR BETTER
2X4 STUDS OVER 10'	#2 OR BETTER
2X4 SILLS & PLATES	STANDARD OR BETTER
2X6 STUDS, SILLS, & PLATES	#2 OR BETTER
4X4 STUDS & POSTS	STANDARD OR BETTER OR #1
4X6, 6X6, & LARGER STUDS & POSTS	#1 OR BETTER
4X4, 4X6 BEAMS & HEADERS	#2 OR BETTER
4X8, 4X10, 4X12, 4X14 BEAMS & HEADERS	#1 OR BETTER
6X4 BEAMS & HEADERS	#2 OR BETTER
6X6 & LARGER BEAM & HEADERS	#1 OR BETTER
2X10 AND LARGER RAFTERS AND JOISTS	#1 OR BETTER

312. HOLES, CUTOUTS, AND NOTCHES IN FRAMING MEMBERS:
BY VIRTUE OF CODE COMPLIANCE WITH ELECTRICAL AND PLUMBING CODES, HOLES AND NOTCHES WILL INEVITABLY BE MADE IN FRAMING MEMBERS. THE CODE RECOGNIZES AND APPROVES VARIOUS HOLES AND NOTCHES WITHOUT ENGINEERING JUSTIFICATION IN CBC SECTION 2308.8.2. ENGINEERED (PSL, LSL) RECTANGULAR LUMBER BEAMS BEHAVE LIKE ANY OTHER RECTANGULAR SHAPE WHEN NOTCHED OR BORED, SO THE ENGINEER OR ARCHITECT MAY SPECIFY LIMITS WITHOUT MANUFACTURER APPROVAL OTHER HOLES AND NOTCHES ARE ALLOWED AS NOTED BELOW:

PSL AND LVL BEAMS: A HOLE 1 INCH IN DIAMETER CAN BE DRILLED ANYWHERE, AND A 2 INCH DIA. HOLE CAN BE DRILLED IN THE MIDDLE THIRD OF THE SPAN IN THE MIDDLE THIRD OF THE DEPTH OF THE BEAM FOR ANY PSL OR LVL BEAM, EXCEPT CANTILEVERED BEAMS AND BEAMS SUPPORTING CONCENTRATED LOADS. HOLES IN THOSE CONDITIONS REQUIRE APPROVAL IN WRITING FROM THE ENGINEER.

PSL AND LVL BEAMS: A RAKE CUT (TAPER) AT THE TOP OF THE BEAM AT THE END OF THE SUPPORT IS ALLOWED IF NOTED ON PLANS, TO A MINIMUM OF 4-3/8" AT INSIDE FACE OF SUPPORT. RAKE CUT (TAPER) THAT RESULTS IN A DEPTH AT THE INSIDE FACE OF THE SUPPORT OF 2/3RDS THE BEAM DEPTH IS ALLOWED AT CONDITIONS NOT SPECIFIED. OTHER TAPERED ENDS AND SQUARE NOTCHES IN TOP OR BOTTOM FACE REQUIRE APPROVAL IN WRITING FROM THE ENGINEER OR ARCHITECT.

STUDS AND PLATES: SEE STRUCTURAL DETAILS 13 & 14 ON SHEET S5 FOR NOTCHING AND BORING.

313. PROVIDE 2X4 TRIMMER & 2X4 KING STUD EACH END OF EACH 4X DROPPED BEAM OR HEADER. PROVIDE DOUBLE TRIMMERS AT EACH 4X10 OR LARGER. PROVIDE DOUBLE TRIMMERS AT EACH 3-1/2 X 7-1/2 PSL OR LSL OR LARGER.

314. PROVIDE 2X6 TRIMMER & 2X6 KING STUD EACH END OF EACH 6X DROPPED BEAM OR HEADER. PROVIDE DOUBLE TRIMMERS AT EACH 6X8 OR LARGER. PROVIDE DOUBLE TRIMMERS AT EACH 5-1/4 X 7-1/2 PSL OR LSL OR LARGER.

315. PROVIDE DOUBLE KING STUDS AT ALL OPENINGS 8'-1" WIDE AND WIDER OR PER PLAN.

316. PROVIDE MINIMUM 2-1/4" BEARING @ EACH END OF EACH FLUSH BEAM OR HEADER WHERE BEARING IS ON TOP PLATE. PROVIDE 2X4 STUD WITHIN 3" OF BEARING POINT. PROVIDE (2) 2X STUDS @ 6X OR LSL OR PSL BEAMS.

317. ROOF RAFTERS SHALL BE 2X RAFTERS AS NOTED ON STRUCTURAL DRAWINGS

318. EAVES SHALL BE PER ARCHITECTURAL PLANS W/ APPLIED TAILS PER ARCHITECTURAL PLANS. OVERHANG DETAILS ARE NOT SHOWN ON STRUCTURAL PLANS.

319. SEE THE ARCHITECTURAL ROOF PLANS FOR ROOF PITCH AND ADDITIONAL INFORMATION.

320. COMBINE AND GROUP PLUMBING VENTS WHENEVER POSSIBLE TO MINIMIZE ROOF PENETRATIONS.

3. WOOD FRAMING CONSTRUCTION (CONT.)

321. WOOD TO WOOD CONNECTORS SHALL BE SIMPSON STRONG TIE OR USP STRUCTURAL CONNECTORS. ALL SPECIFIED CONNECTOR CALL-OUTS ARE SIMPSON CATALOG CALL-OUTS. USP SUBSTITUTIONS SHALL HAVE A CAPACITY EQUAL TO OR GREATER THAN THE SIMPSON CATALOG VALUES. ANY OTHER ICC APPROVED METAL CONNECTOR MAY BE USED UPON APPROVAL BY THE ENGINEER OR ARCHITECT.

322. ICC APPROVED CONNECTORS SHALL BE USED WHERE CONNECTORS ARE SPECIFIED. UNLESS OTHERWISE NOTED, THE FOLLOWING BEAM AND JOIST HANGERS SHALL BE USED:

BEAM OR JOIST	SIMPSON/USP HANGER
I-JOIST FLOOR JOISTS	IUS, IUT, OR ITT HANGERS
1.75 X LSL AND LVL	HU, HUS, OR WPU
2.69 X PSL AND LVL	HU OR HWU
3.5 X PSL AND LVL	HHUS OR HWU
5.25 X PSL AND LVL	HHUS OR HWU
7 X PSL AND LVL	HHUS OR HWU

AT BEAM HANGER CALLOUTS, IE HGUS OR HU BEAMS, THE CALLOUT IS ABBREVIATED. THE HANGER WIDTH MAY BE OMITTED TO ALLOW FLEXIBILITY IN ORDERING. EXAMPLE: 2.69 PSL THE CALLOUT MAY READ HGUS12. AN HGUS2.75/12 OR HGUS412 (WITH FILLERS) ARE APPLICABLE. WHERE HANGERS OFFER (MIN) OR (MAX), NAIL TO APPLY (MAX) LOADS.

323. WHERE SHEARWALL LENGTHS ARE SPECIFIED ON THE PLANS, THE LENGTH SHOWN IS A MINIMUM DIMENSION. THE SHEARWALL MAY BE LENGTHENED FOR CONSTRUCTION PURPOSES, BUT SHALL NOT BE REDUCED UNLESS OTHERWISE NOTED. ALL ENGINEERED WOOD PANEL SHEAR (PLYWOOD OR OSB) SHALL BE BLOCKED.

324. THE FOLLOWING HOLES IN SHEARWALLS ARE ALLOWED:
A) APPROXIMATELY SQUARE HOLES NOTCHED, PUNCHED, OR CUT THAT ARE LESS THAN 25 SQ. INCHES
B) APPROXIMATELY SQUARE HOLES CLEAN CUT OR BORED IN SHEARWALLS THAT ARE LESS THAN 64 SQ. INCHES (ONE HOLE PER 4' OF SHEARWALL.)
C) APPROXIMATELY SQUARE HOLES, LESS THAN 64 SQ. INCHES (ONE HOLE PER 8' OF SHEARWALL) WITH ALL EDGES BLOCKED & EDGE NAILED.
D) HOLES INDIVIDUALLY APPROVED BY THE ENGINEER OR ARCHITECT OF RECORD.

325. STUDS SHALL BE SPACED @ 16" O/C MAX. UNLESS OTHERWISE SPECIFIED. USE STUD GRADE EXCEPT AT PLATE HEIGHTS HIGHER THAN 10'-0", THEN USE DF#2 OR BETTER

326. ALL FINISHES, WATERPROOFING, DRAINAGE, AND FIRE-RELATED ELEMENTS ARE BY THE ARCHITECT OF RECORD AND ARE REQUIRED EVEN THOUGH THEY MAY NOT BE SHOWN ON THE STRUCTURAL PLANS AND DETAILS.

327. REDWOOD OR PRESSURE-TREATED LUMBER IS TO BE USED AT STRUCTURAL MEMBERS FOR BUILDING, BALCONIES, PORCHES OR SIMILAR APPURTENANCES WHEN EXPOSED TO THE WEATHER WITHOUT ADEQUATE PROTECTION OF A ROOF, EAVE, OVERHANG, OR OTHER COVERING TO PREVENT MOISTURE OR WATER ACCUMULATION.

4. ICC-ES AND NER APPROVALS

FULL REPORTS FOUND AT: HTTP://WWW.ICC-ES.ORG

400. PLYWOOD AND OSB PANELS:
APA PLYWOOD & OSB--ESR-2586

401. JOISTS AND RAFTERS AND BEAMS:
TRUS-JOIST TJI JOISTS AND PSL, LSL, & LVL--ICC-ES ESR-1387, 1153,
BOISE CASCADE BCI JOISTS, VERSA-LAM, & VERSA-STRAND--ICC-ESR-1040, 1336
LOUISIANA PACIFIC JOISTS & BEAMS--ESR-1305, 2403
ROSEBURG JOISTS & BEAMS--ESR-1210, 1251
GLU-LAM BEAMS-- ESR-1940
PACIFIC WOOD TECH - ESR 2909

402. WOOD CONNECTORS:
SIMPSON CONNECTORS--ICC-ES ESR #S 1161, 1622, 1866, 2105, 2203, 2236, 2320, 2549, 2551, 2552, 2553, 2330, 2554, 2555, 2604, 2605, 2606, 2607, 2608, 2611, 2613, 2614, 2615, 2616, 2877, 2920, 3046
IAPMO ER-112, 130, 143, 192, 262
USP LUMBER CONNECTORS--ICC-ES ESR #S 1178, 1280, 1575, 1702, 1781, 1881, 1970, 2104, 2685, 1831, 1465, 2761, 2787, IAPMO ER-200
QUICK DRIVE WOOD SCREWS--ICC-ES ESR-1472

403. ADHESIVES & ANCHORS:
SIMPSON EPOXY-TIE HIGH STRENGTH EPOXY (SET-XP)--ICC-ES ESR-1772, 2508.
SIMPSON WEDGE-ALL (WA) WEDGE ANCHORS--ICC-ES ES-1771
SIMPSON TITEN HD--ICC-ESR-1056, 2713
SIMPSON SHOT PINS ICC-ES ESR-2138
HILTI X-DN, X-ZF, X-CF SHOT PINS--ICC-ES ER-1663, 1752, 2269

5. NAILING & FASTENING

500. 16D NAILS AS SHOWN ON THE DETAILS MAY BE COMMON, BOX, OR SINKER NAILS (0.135" MIN. DIA)

501. AS AN ALTERNATE TO THE COMMON AND BOX NAILS SPECIFIED IN THE STRUCTURAL PLANS, THE FOLLOWING "CUTLER" GUN NAILS (OR EQUAL) ARE ACCEPTABLE ALTERNATIVES.

502. ALTERNATE NAILING FOR ROOF SHEATHING:
8D 2 $\frac{1}{2}$" X 0.135 WIRE BARBED NAILS BY CUTLER OR EQUAL.

503. ALTERNATE NAILING FOR FLOOR SHEATHING: #8 X 2" SELF SETTING WOOD SCREWS, OR 8D 2 $\frac{1}{2}$" X 0.135 OR 0.148 SCREW SHANK FLOOR NAILS BY CUTLER OR EQUAL

504. SHEAR PANELS WHERE 8D COMMON NAILS ARE SPECIFIED:
10D 2 $\frac{1}{2}$" X 0.148" WIRE BARBED NAILS BY CUTLER OR EQUAL

NAIL SIZES

SIZE OF NAIL	STANDARD LENGTH	WIRE GAUGE	SIZE (INCHES)	PENETRATION REQUIRED
BOX NAILS				
6D	2"	12	0.099	1"
8D	2 "	11	0.113	1"
10D	3"	10	0.128	1"
12D	3"	10	0.128	1 "
16D	3 "	10	0.135	1 "
16D SINKER	3"	9	0.148	1"
COMMON NAILS				
6D	2"	11	0.113	1"
8D	2$\frac{1}{2}$ "	10	0.131	1"
10D	3"	9	0.148	1$\frac{1}{4}$"
12D	3"	9	0.148	1$\frac{1}{4}$"
16D	3 "	8	0.162	1$\frac{1}{2}$"

C&C PRESSURES

ROOF: GABLE ROOF, PITCH α = 18.3°

$A_{EFFECTIVE}$ =	10 sf	28 sf	30 sf
(-) ZONE 1	-42.0 psf	-39.5 psf	-39.3 psf
(-) ZONE 2	-50.6 psf	-45.5 psf	-45.1 psf
(-) ZONE 3	-87.5 psf	-76.0 psf	-75.2 psf
(+) ALL ZONES	16.5 psf	16.0 psf	16.0 psf

WALLS

$A_{EFFECTIVE}$ =	10 sf	21 sf	48 sf
(-) ZONE 4	-1.28 psf	-34.7 psf	-32.9 psf
(-) ZONE 5	-1.58 psf	-41.6 psf	-38.0 psf
(+) ZONE 4&5	1.00 psf	31.9 psf	30.1 psf

6. NAILING SCHEDULE, MINIMUMS (CBC CHAPTER 23, TABLE 2304.10.2)

BLKNG AT CEILING JOISTS, RAFTERS, OR TRUSSES TO TOP PLATE OR OTHER FRAMING, T.N.	4-8d Box, 3-8d Com, 3-10d box, 3-3" x 0.131" nails, 3-3" 14 gage staples
BLKNG AT CEILING RAFTERS OR TRUSSES NOT AT WALL TOP PLATE TO RAFTER OR TRUSS, T.N.	2-8d Com, 2-3" x 0.131" nails, 2-3" 14 gage staples
BLKNG AT CEILING RAFTERS OR TRUSSES NOT AT WALL TOP PLATE TO RAFTER OR TRUSS, E.N.	2-16d Com, 3-3" x 0.131" nails, 3-3" 14 gage staples
FLAT BLKNG TO TRUSS AND WEB, F.N.	16d Com, 3"x.131" nails, 3"x14 gage staples @ 6" o.c
CEILING JOISTS TO TOP PLATE, T.N.	4-8d box, 3-8d Com, 3-10d box, 3-3"x.131 nails, 3-3" 14 gage staples
CEILING JOISTS NOT ATTACHED TO PARALLEL RAFTER, LAPS OVER PARTITIONS, F.N. PER 2308.7.3.1	3-16d Com, 4-10d box, 4-3" x 0.131" nails, 4-3" 14 gage staples
CEILING JOISTS ATTACHED TO PARALLEL RAFTER (HEEL JOINT), F.N. PER 2308.7.3.1	3-16d Com, 4-10d box, 4-3" x 0.131" nails, 4-3" 14 gage staples
COLLAR TIE TO RAFTER, F.N.	3-10d Com, 4-10d box, 4-3"x0.131" nails, 4-3" 14 gage staples
RAFTER/TRUSS TO TOP PLATE, T.N. PER TABLE 2308.7.3.5	3-10d Com, 3-16d or 4-10d box, 4-3" x 0.131" nails, 4-3" 14 gage staples
RAFTERS TO RIDGE VALLEY OR HIP; OR FATER TO 2" RIDGE BEAM	
TOENAIL	4-16d box, 3-10d Com, 3-16d or 4-10d box, 4-3" x 0.131" nails, 4-3" 14 gage staples
ENDNAIL	2-16d Com, 3-16d box, 3-10d box, 3-3" x 0.131" nails, 3-3" 14 gage staples
STUD TO STUD (NOT AT BRACED WALL PANELS)	16d Com @ 24" o.c. FN OR 2-10d box, 3" x 0.131" nails, 3-3" 14 gage staples @ 16" o.c. FN
STUD TO STUD AT INTERSECTING WALL CORNERS (BRACED WALL)	16d Com @ 16" o.c. FN OR 16d Box, 3" x 0.131" nails, 3-3" 14 gage staples @ 12" o.c. FN
BUILT-UP HEADER (2" TO 2"), FN EA. EDGE	16d Com @ 16" o.c OR 16d Box @ 12" o.c.
CONT. HEADER TO STUD, T.N.	4-8d Com, 4-10d Box, 5-8d box
TOP PLATE TO TOP PLATE	16d Com @ 16" o.c. FN OR 10d Box, 3" x 0.131" nails, 3" 14 gage staples @ 12 o.c. FN
TOP PLATE TO TOP PLATE, AT END JOINTS (EACH SIDE OF END JOINT), FACENAIL	
24" MIN LAP SPLICE EA. SIDE	8-16d Com, 12-16d Box, 12-10d Box, 12-3" x 0.131" nails, 12-3" 14 gage staples
BOTTOM PLATE TO JOIST, RIM, OR BLKG, FACENAIL	
UNBRACED WALL: 16" o.c. FN	16d Com
UNBRACED WALL: 12" o.c. FN	16d Box, 3" x 0.131" nails, 3" 14 gage staples
BRACED WALL: 16"o.c. FN	2-16d Com, 3-16d Box,4-3"x.131" nails,4-3" 14 gage staples
STUD TO TOP OR BOTTOM PLATE	
TOENAIL	4-8d Box, 4x10d Box, 4-8d Com, 3-16d Box, 4-3"x0.131" nails, 4-3" 14 gage staples
ENDNAIL	3-16d Box, 2-16d Com, 3-10d Box, 3-3"x0.131" nails, 3-3" 14 gage staples
TOP PLATES, LAPS AT CORNERS AND INTERSECTION, F.N.	2-16d Com, 3-10d box, 3-3" x 0.131" nails, 3-3" 14 gage staples
1" BRACE TO EACH STUD AND PLATE, F.N.	3-8d Box, 2-8d Com, 2-10d Box, 2-3" x 0.131" nails, 2-3" 14 gage staples
1"x6" SHEATHING TO EACH BEARING, F.N.	3-8d Box, 2-1.75" 16 Gage staples, 2-8d Com, 2-10d Box
1"x8" SHEATHING AND WIDER TO EACH BEARING, F.N.	4-8d box, 4-1.75" 16 Gage staples, 3-8d Com, 3-10d Box
JOIST TO SILL, TOP PLATE, OR GIRDER, T.N.	4-8d box, 3-8d Com, 3-10d Box, 3-3" x 0.131" nails, 3-3" 14 gage staples
RIM JOIST, BAND JOIST, OR BLOCKING TO TOP PLATE, SILL OR OTHER	8d Box @ 4" o.c. TN OR 8d Com, 10d Box, 3" x 0.131" nails, 3" 14 gage staples @ 6" o.c. TN
1"x6" SUBFLOOR OR LESS TO EACH JOIST, F.N.	2-1.75" Gage Staples, 2-8d Com, 3-10d Box
2" SUBFLOOR TO JOIST OR GIRDER, F.N. or BLIND	3-16d Box, 2-16d Com
2" PLANKS (PLANK & BEAM - FLOOR & ROOF), FACENAIL & EACH BEARING	3-16d Box, 2-16d Com
BUILT-UP GIRDERS AND BEAMS, 2" LUMBER LAYERS	
32" o.c. FN Top & BTTM STAGGERED ON OPPOSITE SIDES	20d Com
24" o.c. FN Top & BTTM	10d Box, 3"x0.131" nails, 3" 14 gage staples
ENDS & SPLICES, FN	2-20d Com, 3-10d Box, 3-3"x0.131" nails, 3-3" 14 gage staples
LEDGER SUPPORTING JOISTS/RAFTERS	4-16d Box, 3-16d Com, 4-10d Box, 4-3"X0.131, 4-3" 14ga. STAPLES
JOIST TO BAND OR RIM JOIST, END NAIL	3-16d Com, 4-10d Box, 4-3"X0.131, 4-3" 14ga. STAPLES
BRIDGING OR BLOCKING TO JOIST, RAFTER OR TRUSS EACH END, T.N.	2-8d Com, 2-10d box, 2-3" x 0.131" nails, 2-3" 14 gage staples

WOOD STRUCT. PANELS, SUBFLOOR, ROOF AND INTERIOR WALL SHTNG TO FRMG AND PARTICLEBOARD WALL SHEATHING TO FRAMING		EDGES (IN)	INTERMEDIATE SUPPORTS (IN)
$\frac{3}{8}$"-$\frac{1}{2}$"	16d Com or deformed; or 2$\frac{3}{8}$"x.113" nail (subfloor and wall)	6	12
	8d Com or deformed (roof) or 2$\frac{3}{8}$" x.113" nail (roof)	6[e]	6[e]
	1$\frac{3}{4}$" 16 Ga Staple, $\frac{7}{16}$" crown (subfloor and wall)	4	8
	2$\frac{3}{8}$" x.113"x.266" head nail (roof)	3[f]	3[f]
	1$\frac{3}{4}$" 16 Ga Staple, $\frac{7}{16}$" crown (roof)	3[f]	3[f]
$\frac{19}{32}$"-$\frac{3}{4}$"	8d Com or deformed (subfloor and wall)	6	12
	8d Com or deformed (roof) or 2$\frac{3}{8}$" x.113" nail (roof)[d]	6[e]	6[e]
	2$\frac{3}{8}$" x.113"x.266" head nail, 2"16 Gage staple, $\frac{7}{16}$" crown	4	8
$\frac{7}{8}$"-1$\frac{1}{4}$"	10d Com or (3"x0.148"); or deformed (2$\frac{1}{2}$ x.131"x.281 head)	6	12
OTHER EXTERIOR WALL SHEATHING (FIBERBOARD)			
$\frac{1}{2}$"[b]	1$\frac{1}{2}$" x0.120", galvanized roofing nail ($\frac{7}{16}$" head dia) or 1$\frac{1}{4}$" 16 Ga Staple w/ $\frac{7}{16}$" or 1" crown	3	6
$\frac{25}{32}$"[b]	1$\frac{3}{4}$" x0.120", galvanized roofing nail ($\frac{7}{16}$" head dia) or 1$\frac{1}{2}$" 16 Ga Staple w/ $\frac{7}{16}$" or 1" crown	3	6
WOOD STRUCTURAL PANELS, COMBINATION SUBFLOOR UNDERLAYMENT TO FRAMING			
$\frac{3}{4}$" & LESS	8d COMMON (2 $\frac{1}{2}$"x0.131"); or deformed (2"x0.113"); or deformed (2"x0.120")	6	12
$\frac{7}{8}$"-1"	8d COMMON (2 $\frac{1}{2}$"x0.131"); or deformed (2"x0.113"); or deformed (2"x0.120")	6	12
1$\frac{1}{8}$"-1$\frac{1}{4}$"	10d COMMON (3"x0.148"); or deformed (2$\frac{1}{2}$"x0.131"); or deformed (2$\frac{1}{2}$"x0.120")	6	12
PANEL SIDING TO FRAMING			
$\frac{1}{2}$" & LESS	6d corrosion-resistant siding (1$\frac{7}{8}$"x.106"); or 6d corrosion-resistant (2"x.099")	6	12
$\frac{5}{8}$"	8d corrosion-resistant siding (2$\frac{3}{8}$"x0.128"); or 8d corrosion-resistant casing (2$\frac{1}{2}$"x0.113")	6	12
INTERIOR PANELING			
$\frac{1}{4}$"	4d casing (1$\frac{1}{2}$"x0.080"); or 4d finish (1$\frac{1}{2}$"x0.072")	6	12
$\frac{3}{8}$"	6d casing (2"x0.099"); or 6d finish (2"x.092") - (Panel supports at 24 inches)	6	12

FOOTNOTES:

a. Nails spaced at 6 inches at intermediate supports where spans are 48 inches or more. For nailing of wood structural panel and particleboard diaphragms and shear walls, refer to Section 2305. Nails for wall sheathing are permitted to be common, box or casing.
b. Spacing shall be 6 inches on center on the edges and 12 inches on center at intermediate supports for nonstructural applications. Panel supports at 16 inches (20 inches if strength axis in the long direction of the panel, unless otherwise marked).
c. Where a rafter is fastened to an adjacent parallel ceiling joist in accordance with this schedule and the ceiling joist is fastened to the top plate in accordance with this schedule, the number of toenails in the rafter shall be permitted to be reduced by one nail.
d. RSRS-01 is a Roof Sheathing Ring Shank nail meeting the specifications in ASTM F1667.
e. Tabulated fastener requirements apply where the ultimate design wind speed is less than 140 mph. For wood structural panel roof sheathing attached to gable-end roof framing and to intermediate supports within 48 inches of roof edges and ridges, nails shall be spaced at 4 inches on center where the ultimate design wind speed is greater than 130 mph in Exposure B or greater than 110 mph in Exposure C. Spacing exceeding 6 inches on center at intermediate supports shall be permitted where the fastening is designed per the AWC NDS.
e. Fastening is only permitted where the ultimate design wind speed is less than or equal to 110 mph
g. Nails and staples are carbon steel meeting the specifications of ASTM F1667. Connections using nails and staples of other materials, such as stainless steel, shall be designed by acceptable engineering practice or approved under Section 104.11.

7. DESIGN CRITERIA

700. BUILDING CODE: 2022 CALIFORNIA BUILDING CODE AND 2022 CALIFORNIA RESIDENTIAL CODE.

701. SEISMIC DESIGN CRITERIA:

SOIL BEARING VALUE					1,500 psf
SITE CLASS					D (Default)
SEISMIC DESIGN CATEGORY					D
RISK CATEGORY					II
SEISMIC IMPORTANCE FACTOR					1
Ss:	1.600	Sds:	1.280	Cs:	0.179
S1:	0.600	Sd1:	0.680	R:	6.5

BASIC SEISMIC FORCE RESISTING SYSTEM:BEARING WALL ANALYSIS METHOD: EQUIVALENT LATERAL FORCE PROCEDURE SEE STRUCTURAL CALCULATIONS.

702. WIND DESIGN CRITERIA :

WIND SPEED (V-ult)	124 mph
RISK CATEGORY	II
EXPOSURE	C
INTERNAL PRESSURE COEF	0.18

703. DESIGN LOADING:

ROOF DL	28 psf	I	ROOF LL	20 psf
PORCH DL	33 psf	I	PORCH LL	20 psf
TRELLIS DL	6 psf	I	TRELLIS LL	10 psf
SOLAR PANELS	3 psf			

8. STATEMENT OF SPECIAL INSPECTIONS

800. RETROFIT ANCHOR BOLTS FOR MISPLACED HOLDOWNS WITH ALL-THREAD ROD AND SIMPSON SET-XP EPOXY REQUIRE SPECIAL INSPECTION. (NO SPECIAL INSPECTION IS REQUIRED FOR RETROFIT ANCHOR BOLTS OR TITEN HD's WITHOUT A HOLDOWN ATTACHED.)

801. PER CBC 1705.3 SPECIAL INSPECTION IS NOT REQUIRED FOR NON-STRUCTURAL SLABS ON GRADE NOR FOR CONCRETE FOOTINGS THAT SUPPORT 3 STORIES ABOVE GRADE OR LESS.

802. PER CBC 1705.13 SPECIAL INSPECTION IS NOT REQUIRED FOR SEISMIC COMPONENTS FOR DETTACHED ONE- AND TWO-FAMILY DWELLINGS NOT EXCEEDING 2 STORIES ABOVE GRADE.

9. SOILS REPORT

A SOILS REPORT MAY BE REQUIRED BY THE BUILDING OFFICIAL. IN-LIEU OF THE SOILS REPORT A CONSERVATIVE VALUE FOR THE SOIL BEARING ALLOWABLE OF 1500 PSF HAS BEEN USED IN DESIGN OF THE BUILDING.

FOR USE IN THE CITY OF PERRIS

DESIGN PATH STUDIO
architecture + engineering + planning
DESIGNPATHSTUDIO.COM

BY USING THESE PERMIT READY CONSTRUCTION DOCUMENTS, THE RECIPIENT ACKNOWLEDGES, ACCEPTS AND VOLUNTARILY AFFIRMS THE FOLLOWING CONDITIONS:
1. THE USE OF THIS INFORMATION IS RESTRICTED TO THE ORIGINAL PROJECT FOR WHICH IT WAS PREPARED FOR THE PERMIT READY ACCESSORY DWELLING UNIT (ADU) PROGRAM FOR THE CITY OF PERRIS ONLY. THIS IS A LIMITED SET OF STANDARDIZED ADU PLANS AND SPECIFICATIONS APPROVED BY THE CITY OF PERRIS BUILDING DEPARTMENT. BUILDING CODES DO CHANGE OVER TIME AND RECIPIENT SHALL ENSURE FULL COMPLIANCE UNDER ALL CODES THEN IN EFFECT AT THE TIME OF THE SUBJECT PERMIT. THIS DOES NOT ELIMINATE OR REDUCE THE RECIPIENT'S RESPONSIBILITY TO VERIFY ANY AND ALL INFORMATION RELEVANT TO THE RECIPIENT'S WORK AND RESPONSIBILITY ON THIS PROJECT. DESIGN PATH STUDIO SHALL NOT BE RESPONSIBLE FOR TRANSLATION ERRORS. DO NOT USE THESE CONSTRUCTION DOCUMENTS IF THE PERMIT HAS EXPIRED OR IS REVOKED AT ALL.
2. THE RECIPIENT RECOGNIZES AND ACKNOWLEDGES THAT THE USE OF THIS INFORMATION WILL BE AT THEIR SOLE RISK AND WITHOUT ANY LIABILITY OR LEGAL EXPOSURE TO DESIGN PATH STUDIO. NO WARRANTIES OF ANY NATURE, WHETHER EXPRESS OR IMPLIED, SHALL ATTACH TO THESE DOCUMENTS AND THE INFORMATION CONTAINED THEREON. ANY USE, REUSE, OR ALTERATION OF THESE DOCUMENTS BY THE RECIPIENT OR BY OTHERS WILL BE AT THE RECIPIENT'S RISK AND FULL LEGAL RESPONSIBILITY. FURTHERMORE, THE RECIPIENT WILL, TO THE FULLEST EXTENT PERMITTED BY LAW, DEFEND, INDEMNIFY AND HOLD DESIGN PATH STUDIO AND ITS ARCHITECTS HARMLESS FROM ANY AND ALL CLAIMS, SUITS, LIABILITY, DEMANDS, JUDGMENTS, OR COSTS ARISING OUT OF OR RESULTING THERE FROM ANY USE OF THESE CONSTRUCTION DOCUMENTS FOR OR ON ACCOUNT OF ANY INJURY, DEATH, DAMAGE OR LOSS TO PERSONS OR PROPERTY, DIRECT OR CONSEQUENTIAL DAMAGES IN ANY AMOUNT. THIS INDEMNITY DOES NOT APPLY TO THE SOLE NEGLIGENCE OR WILLFUL MISCONDUCT OF DESIGN PATH STUDIO OR ITS ARCHITECTS.
3. THE DESIGNS REPRESENTED BY THESE PLANS ARE COPYRIGHTED AND ARE SUBJECT TO COPYRIGHT PROTECTION.
4. IF THE RECIPIENT DOES NOT AGREE WITH THE ABOVE CONDITIONS, DO NOT PROCEED WITH CONSTRUCTION OF AN ADU OR OTHER IMPROVEMENT UNDER THESE PLANS AT ALL.

project
City of Perris Pre-Approved ADU Program

revisions
01

description
Structural Notes & Specifications

date 4 April 2025
project no. PERRIS PRADU
drawn by DESIGN PATH STUDIO
sheet no. S1

NOTE
FOUNDATION, HOLD DOWN AND SHEAR WALL LOCATIONS, FRAMING SIZES AND SPACING TO REMAIN THE SAME AT ACCESSIBLE OPTION PLAN

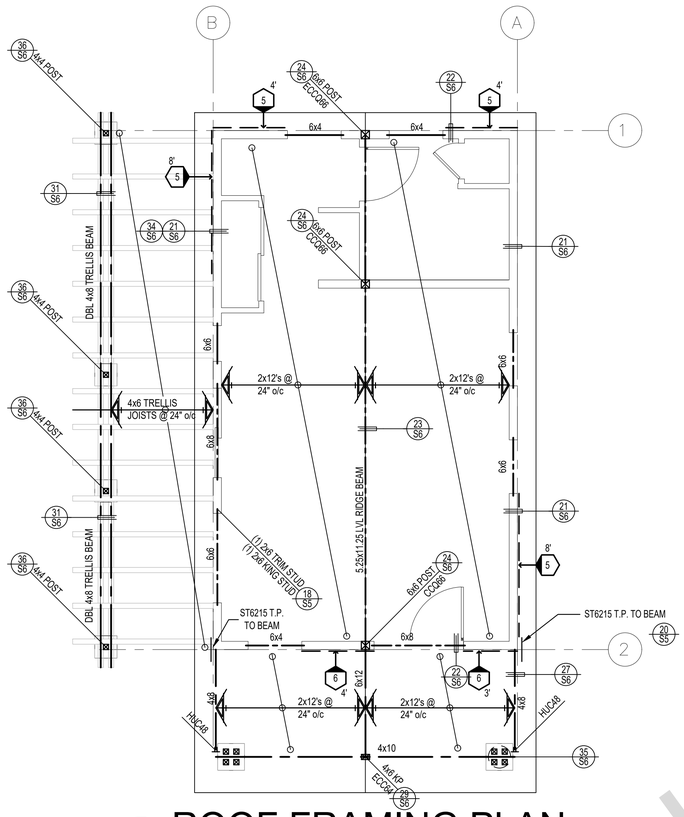

ROOF FRAMING PLAN

1/4"=1'-0" CRAFTSMAN

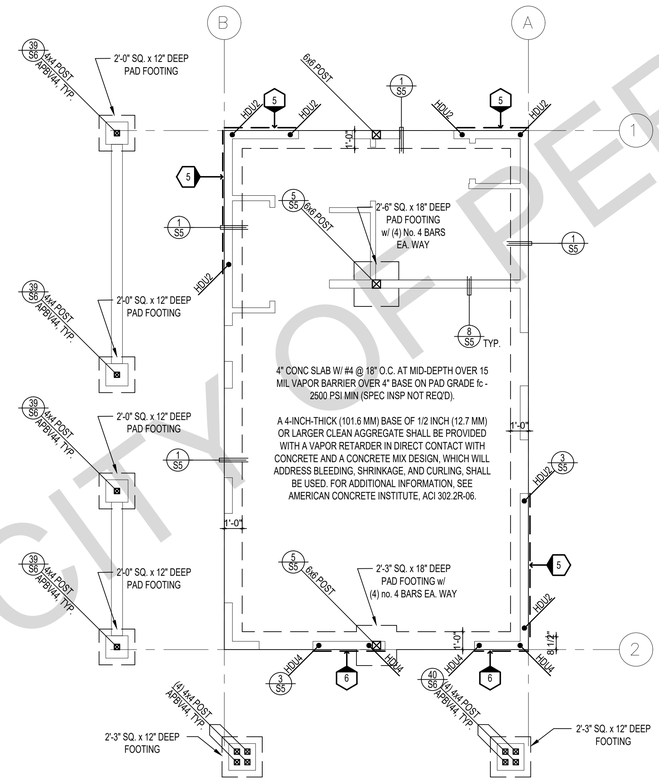

FOUNDATION PLAN

1/4"=1'-0" CRAFTSMAN

SHEAR WALL SCHEDULE (ASD VALUES)

	4	5	6	7	8	9
SHEARWALL DESCRIPTION (See footnotes 1& 4)	3/8" ply. C-D or C-C sheathing, (1) side w/ 8d @ 6" o/c edge, 12" o/c field, blocked (See footnotes 3 & 6)	3/8" ply. C-D or C-C sheathing, (1) side w/ 8d @ 4" o/c edge, 12" o/c field, blocked (See footnotes 3 & 6)	3/8" ply. C-D or C-C sheathing, (1) side w/ 8d @ 3" o/c edge, 12" o/c field 3x abutting panel studs blocked (See footnote 3,4, & 6)	7/16" rated STRUCT 1 panel, (1) side w/ 8d @ 3" o/c edge, 12" o/c field 3x abutting panel studs blocked (See footnote 3,4, & 6)	15/32" rated STRUCT 1 panel, (1) side w/ 10d @ 3" o/c edge, 12" o/c field 3x abutting panel studs blocked (See footnote 3, 4, 5, & 6)	15/32" rated STRUCT 1 panel, (1) side w/ 10d @ 2" o/c edge, 12" o/c field 3x abutting panel studs blocked (See footnote 3, 4, 5, & 6)
SHEAR VALUE (PLF)	260*	380*	490*	550*	665*	870*
ANCHOR BOLT SPACING	5/8" @ 48" or 1/2" @ 32"	5/8" @ 32" or 1/2" @ 24"	5/8" @ 24" or 1/2" @ 16"	5/8" @ 24" or 1/2" @ 16"	5/8" @ 16" or 1/2" @ 12"	5/8" @ 12" or 1/2" @ 8"
SPACING OF A35/LTP4 FRAMING TO TOP PLATE	30" O.C.	16" O.C.	12" O.C.	12" O.C.	8" O.C.	8" O.C.

FOUNDATION NOTES

1. ALL ANCHOR BOLTS, HOLDOWN ANCHORS, & REINF. MUST BE SECURELY TIED IN PLACE PRIOR TO FDTN. INSP.
2. ALL EXTERIOR STUDS TO BE 2x6 @ 16" O.C.
3. THE MINIMUM NOMINAL ANCHORBOLT DIAMETER SHALL BE 1/2 INCH NOTE: THIS WILL REQUIRE A MINIMUM DISTANCE FROM THE ENDS OF SILL PLATES TO BE 4" (AND A MAXIMUM OF 12")
4. PLATE WASHERS (MINIMUM SIZE OF 3" x 3" x 1/4") SHALL BE USED ON EACH ANCHOR BOLT.
5. PROVIDE CONC SLAB JOINTS AT NO MORE THAN 15 FT EA. WAY
6. SEE SHEET S5 FOR TYP. CONCRETE & SLAB DETAILS 1-8
7. POSTS W/O SPECIFIED BASE SHALL BE NAILED TO BOLTED SILL PLATES W/ (2) 16d T.N. EA SIDE, TYP.
8. FOOTINGS ADJACENT TO SLOPES GREATER THAN OR EQUAL TO 33.3% SHALL COMPLY WITH SETBACK REQUIREMENTS DEFINED IN CBC 1808.7.

SHEAR WALL FOOTNOTES

(1) AT PLYWOOD OR OSB PS-1 OR PS-2 RATED PANELS USE COMMON NAILS OR GALVANIZED BOX NAILS (2) LAYERS OF PAPER EXTERIOR PLYWOOD REQUIRED. SHEARSHALL BE APPLIED OVER STUDS @ 16" O/C. GALVANIZED NAILS SHALL NOT BE HOT-DIPPED OR TUMBLED.

(2) SILL PLATES & WASHERS SHALL COMPLY WITH THE CONCRETE FOUNDATION CONSTRUCTION AND WOOD FRAMING CONSTRUCTION NOTES. (SEE NOTES #206, 208, 209. 307, 308, 309, ETC.)

(3) IN PLYWOOD SHEARWALLS, THE EDGE OF THE 3" SQUARE WASHERS (SEE NOTE #206) SHALL BE 1/2" OR LESS FROM THE EDGE OF THE SILL PLATE ON THE SIDE OF THE SHEATHING. ALL NAILING SHALL BE 3/8" MIN. FROM THE EDGE OF SHEATHING.

(4) WHERE ALLOWABLE SHEAR VALUES EXCEED 350 PLF (SHEARWALL TYPES 6, 7, 8, & 9) ALL FRAMING RECEIVING NAILING FROM ABUTTING PANEL EDGES SHALL NOT BE LESS THAN A SINGLE 3" NOMINAL MEMBER OR (2) 2X MEMBERS NAILED WITH 10D , SPACING EQUAL TO THE E.N. SPACING. PLYWOOD JOINT AND SILL NAILING SHALL BE STAGGERED.

(5) IN SHEARWALL TYPES 8 & 9, SILL PLATE NAILING SHALL BE STAGGERED. AT SECOND FLOOR CONDITIONS, PROVIDE ADEQUATE RIM OR BLOCKING TO PREVENT SPLITTING.

(6) WHERE NOISE INSULATION IS REQUIRED, STRUCTURAL SHEAR PANELS TO BE UPGRADED TO 1/2" WSP, ALL OTHER EXTERIOR SURFACES TO BE SHEATH WITH GRADE D MIN. 1/2" SOLID SHEATHING WITH 6" O.C. EDGE NAILING, 12" O.C. FIELD NAILING.

(*) ALLOWABLE SHEAR VALUES FOR PLYWOOD SHEARWALLS MAY BE INCREASED BY 40% UNDER WIND LOADING.

LEGEND

- X' — SHEARWALL & A.B. SPACING PER SCHEDULE
- BOLT TYPE HOLDOWN
- BEARING OR EXTENT OF RAFTERS
- HANGER TO BEAM/LEDGER
- BEARING OR EXTENT OF JOISTS
- CALIFORNIA FILL FRAMING

* PLEASE REFER TO NOTES 311 & 401 ON S1 FOR LUMBER GRADE SPECIFICATIONS.

FOR USE IN IN THE CITY OF PERRIS

DESIGN PATH STUDIO
architecture + engineering + planning
DESIGNPATHSTUDIO.COM

BY USING THESE PERMIT READY CONSTRUCTION DOCUMENTS, THE RECIPIENT ACKNOWLEDGES, ACCEPTS AND VOLUNTARILY AFFIRMS THE FOLLOWING CONDITIONS:
1. THE USE OF THIS INFORMATION IS RESTRICTED TO THE ORIGINAL PROJECT FOR WHICH IT WAS PREPARED FOR THE PERMIT READY ACCESSORY DWELLING UNIT (ADU) PROGRAM FOR THE CITY OF PERRIS ONLY. THIS IS A LIMITED SET OF STANDARDIZED ADU PLANS AND SPECIFICATIONS APPROVED BY THE CITY OF PERRIS BUILDING DEPARTMENT. BUILDING CODES DO CHANGE OVER TIME AND RECIPIENT SHALL ENSURE FULL COMPLIANCE UNDER ALL CODES THEN IN EFFECT AT THE TIME OF THE SUBJECT PERMIT. THIS DOES NOT ELIMINATE OR REDUCE THE RECIPIENT'S RESPONSIBILITY TO VERIFY ANY AND ALL INFORMATION RELEVANT TO THE RECIPIENT'S WORK AND RESPONSIBILITY ON THIS PROJECT. DESIGN PATH STUDIO SHALL NOT BE RESPONSIBLE FOR TRANSLATION ERRORS. DO NOT USE THESE CONSTRUCTION DOCUMENTS IF THE PERMIT HAS EXPIRED OR IS REVOKED AT ALL.
2. THE RECIPIENT RECOGNIZES AND ACKNOWLEDGES THAT THE USE OF THIS INFORMATION WILL BE AT THEIR SOLE RISK AND WITHOUT ANY LIABILITY OR LEGAL EXPOSURE TO DESIGN PATH STUDIO. NO WARRANTIES OF ANY NATURE, WHETHER EXPRESS OR IMPLIED, SHALL ATTACH TO THESE DOCUMENTS AND THE INFORMATION CONTAINED THEREON. ANY USE, REUSE, OR ALTERATION OF THESE DOCUMENTS BY THE RECIPIENT OR BY OTHERS WILL BE AT THE RECIPIENT'S RISK AND FULL LEGAL RESPONSIBILITY. FURTHERMORE, THE RECIPIENT WILL, TO THE FULLEST EXTENT PERMITTED BY LAW, DEFEND, INDEMNIFY AND HOLD DESIGN PATH STUDIO AND ITS ARCHITECTS HARMLESS FROM ANY AND ALL CLAIMS, SUITS, LIABILITY, DEMANDS, JUDGMENTS, OR COSTS ARISING OUT OF OR RESULTING THERE FROM ANY USE OF THESE CONSTRUCTION DOCUMENTS FOR OR ON ACCOUNT OF ANY INJURY, DEATH, DAMAGE OR LOSS TO PERSONS OR PROPERTY, DIRECT OR CONSEQUENTIAL DAMAGES IN ANY AMOUNT. THIS INDEMNITY DOES NOT APPLY TO THE SOLE NEGLIGENCE OR WILLFUL MISCONDUCT OF DESIGN PATH STUDIO OR ITS ARCHITECTS.
3. THE DESIGNS REPRESENTED BY THESE PLANS ARE COPYRIGHTED AND ARE SUBJECT TO COPYRIGHT PROTECTION.
4. IF THE RECIPIENT DOES NOT AGREE WITH THE ABOVE CONDITIONS, DO NOT PROCEED WITH CONSTRUCTION OF AN ADU OR OTHER IMPROVEMENT UNDER THESE PLANS AT ALL.

project
City of Perris Pre-Approved ADU Program

revisions

description
Craftsman Foundation & Framing Plan

date 4 April 2025

project no. PERRIS PRADU

drawn by DESIGN PATH STUDIO

sheet no. S2

NOTE
FOUNDATION, HOLD DOWN AND SHEAR WALL LOCATIONS, FRAMING SIZES AND SPACING TO REMAIN THE SAME AT ACCESSIBLE OPTION PLAN

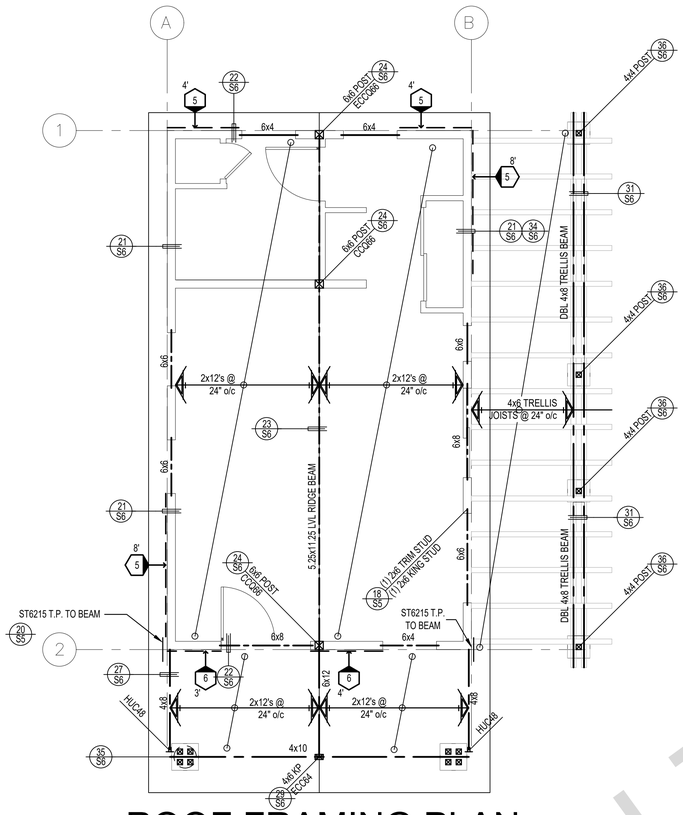

ROOF FRAMING PLAN

1/4"=1'-0" CRAFTSMAN REVERSE

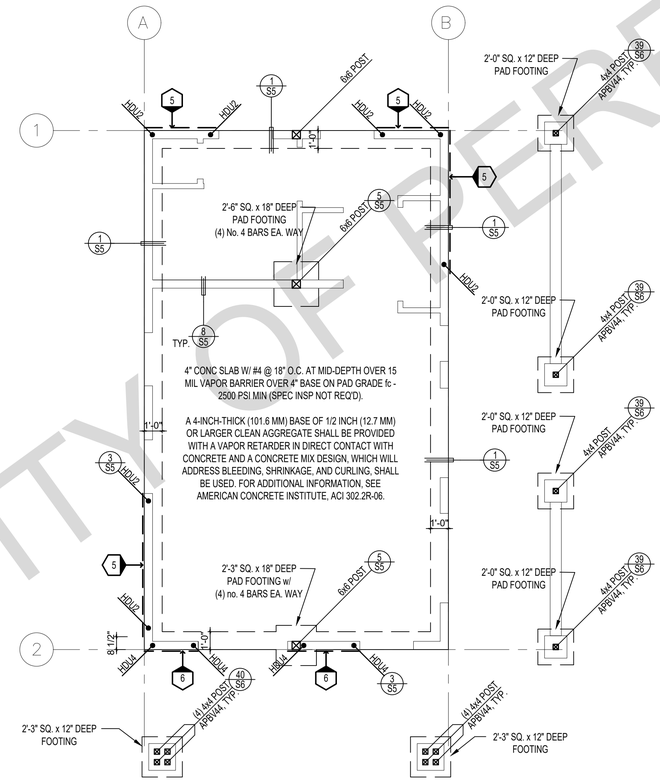

FOUNDATION PLAN

1/4"=1'-0" CRAFTSMAN REVERSE

FOUNDATION NOTES

1. ALL ANCHOR BOLTS, HOLDOWN ANCHORS, & REINF. MUST BE SECURELY TIED IN PLACE PRIOR TO FDTN. INSP.
2. ALL EXTERIOR STUDS TO BE 2x6 @ 16" O.C.
3. THE MINIMUM NOMINAL ANCHORBOLT DIAMETER SHALL BE 1/2 INCH NOTE: THIS WILL REQUIRE A MINIMUM DISTANCE FROM THE ENDS OF SILL PLATES TO BE 4" (AND A MAXIMUM OF 12")
4. PLATE WASHERS (MINIMUM SIZE OF 3" x 3" x 1/4") SHALL BE USED ON EACH ANCHOR BOLT.
5. PROVIDE CONC SLAB JOINTS AT NO MORE THAN 15 FT EA. WAY
6. SEE SHEET S5 FOR TYP. CONCRETE & SLAB DETAILS 1-8
7. POSTS W/O SPECIFIED BASE SHALL BE NAILED TO BOLTED SILL PLATES W/ (2) 16d T.N. EA SIDE, TYP.
8. FOOTINGS ADJACENT TO SLOPES GREATER THAN OR EQUAL TO 33.3% SHALL COMPLY WITH SETBACK REQUIREMENTS DEFINED IN CBC 1808.7.

SHEAR WALL SCHEDULE (ASD VALUES)

	4	5	6	7	8	9
SHEARWALL DESCRIPTION (See footnotes 1& 4)	3/8" ply. C-D or C-C sheathing, (1) side w/ 8d @ 6" o/c edge, 12" o/c field, blocked (See footnotes 3 & 6)	3/8" ply. C-D or C-C sheathing, (1) side w/ 8d @ 4" o/c edge, 12" o/c field, blocked (See footnotes 3 & 6)	3/8" ply. C-D or C-C sheathing, (1) side w/ 8d @ 3" o/c edge, 12" o/c field 3x abutting panel studs blocked (See footnote 3,4, & 6)	7/16" rated STRUCT 1 panel, (1) side w/ 8d @ 3" o/c edge, 12" o/c field 3x abutting panel studs blocked (See footnote 3,4, & 6)	15/32" rated STRUCT 1 panel, (1) side w/ 10d @ 3" o/c edge, 12" o/c field 3x abutting panel studs blocked (See footnote 3, 4, 5, & 6)	15/32" rated STRUCT 1 panel, (1) side w/ 10d @ 2" o/c edge, 12" o/c field 3x abutting panel studs blocked (See footnote 3, 4, 5, & 6)
SHEAR VALUE (PLF)	260*	380*	490*	550*	665*	870*
ANCHOR BOLT SPACING	5/8" @ 48" or 1/2" @ 32"	5/8" @ 32" or 1/2" @ 24"	5/8" @ 24" or 1/2" @ 16"	5/8" @ 24" or 1/2" @ 16"	5/8" @ 16" or 1/2" @ 12"	5/8" @ 12" or 1/2" @ 8"
SPACING OF A35/LTP4 FRAMING TO TOP PLATE	30" O.C.	16" O.C.	12" O.C.	12" O.C.	8" O.C.	8" O.C.

SHEAR WALL FOOTNOTES

(1) AT PLYWOOD OR OSB PS-1 OR PS-2 RATED PANELS USE COMMON NAILS OR GALVANIZED BOX NAILS (2) LAYERS OF PAPER EXTERIOR PLYWOOD REQUIRED. SHEARSHALL BE APPLIED OVER STUDS @ 16" O/C. GALVANIZED NAILS SHALL NOT BE HOT-DIPPED OR TUMBLED.

(2) SILL PLATES & WASHERS SHALL COMPLY WITH THE CONCRETE FOUNDATION CONSTRUCTION AND WOOD FRAMING CONSTRUCTION NOTES. (SEE NOTES #206, 208, 209. 307, 308, 309, ETC.)

(3) IN PLYWOOD SHEARWALLS, THE EDGE OF THE 3" SQUARE WASHERS (SEE NOTE #206) SHALL BE 1/2" OR LESS FROM THE EDGE OF THE SILL PLATE ON THE SIDE OF THE SHEATHING. ALL NAILING SHALL BE 3/8" MIN. FROM THE EDGE OF SHEATHING.

(4) WHERE ALLOWABLE SHEAR VALUES EXCEED 350 PLF (SHEARWALL TYPES 6, 7, 8, & 9) ALL FRAMING RECEIVING NAILING FROM ABUTTING PANEL EDGES SHALL NOT BE LESS THAN A SINGLE 3" NOMINAL MEMBER OR (2) 2X MEMBERS NAILED WITH 10D , SPACING EQUAL TO THE E.N. SPACING. PLYWOOD JOINT AND SILL NAILING SHALL BE STAGGERED.

(5) IN SHEARWALL TYPES 8 & 9, SILL PLATE NAILING SHALL BE STAGGERED. AT SECOND FLOOR CONDITIONS, PROVIDE ADEQUATE RIM OR BLOCKING TO PREVENT SPLITTING.

(6) WHERE NOISE INSULATION IS REQUIRED, STRUCTURAL SHEAR PANELS TO BE UPGRADED TO 1/2" WSP, ALL OTHER EXTERIOR SURFACES TO BE SHEATH WITH GRADE D MIN. 1/2" SOLID SHEATHING WITH 6" O.C. EDGE NAILING, 12" O.C. FIELD NAILING.

(*) ALLOWABLE SHEAR VALUES FOR PLYWOOD SHEARWALLS MAY BE INCREASED BY 40% UNDER WIND LOADING.

LEGEND

- X' — SHEARWALL & A.B. SPACING PER SCHEDULE
- BOLT TYPE HOLDOWN
- BEARING OR EXTENT OF RAFTERS
- HANGER TO BEAM/LEDGER
- BEARING OR EXTENT OF JOISTS
- CALIFORNIA FILL FRAMING

* PLEASE REFER TO NOTES 311 & 401 ON S1 FOR LUMBER GRADE SPECIFICATIONS.

DESIGN PATH STUDIO
architecture + engineering + planning
DESIGNPATHSTUDIO.COM

BY USING THESE PERMIT READY CONSTRUCTION DOCUMENTS, THE RECIPIENT ACKNOWLEDGES, ACCEPTS AND VOLUNTARILY AFFIRMS THE FOLLOWING CONDITIONS:
1. THE USE OF THIS INFORMATION IS RESTRICTED TO THE ORIGINAL PROJECT FOR WHICH IT WAS PREPARED FOR THE PERMIT READY ACCESSORY DWELLING UNIT (ADU) PROGRAM FOR THE CITY OF PERRIS ONLY. THIS IS A LIMITED SET OF STANDARDIZED ADU PLANS AND SPECIFICATIONS APPROVED BY THE CITY OF PERRIS BUILDING DEPARTMENT. BUILDING CODES DO CHANGE OVER TIME AND RECIPIENT SHALL ENSURE FULL COMPLIANCE UNDER ALL CODES THEN IN EFFECT AT THE TIME OF THE SUBJECT PERMIT. THIS DOES NOT ELIMINATE OR REDUCE THE RECIPIENT'S RESPONSIBILITY TO VERIFY ANY AND ALL INFORMATION RELEVANT TO THE RECIPIENT'S WORK AND RESPONSIBILITY ON THIS PROJECT. DESIGN PATH STUDIO SHALL NOT BE RESPONSIBLE FOR TRANSLATION ERRORS. DO NOT USE THESE CONSTRUCTION DOCUMENTS IF THE PERMIT HAS EXPIRED OR IS REVOKED AT ALL.
2. THE RECIPIENT RECOGNIZES AND ACKNOWLEDGES THAT THE USE OF THIS INFORMATION WILL BE AT THEIR SOLE RISK AND WITHOUT ANY LIABILITY OR LEGAL EXPOSURE TO DESIGN PATH STUDIO. NO WARRANTIES OF ANY NATURE, WHETHER EXPRESS OR IMPLIED, SHALL ATTACH TO THESE DOCUMENTS AND THE INFORMATION CONTAINED THEREON. ANY USE, REUSE, OR ALTERATION OF THESE DOCUMENTS BY THE RECIPIENT OR BY OTHERS WILL BE AT THE RECIPIENT'S RISK AND FULL LEGAL RESPONSIBILITY. FURTHERMORE, THE RECIPIENT WILL, TO THE FULLEST EXTENT PERMITTED BY LAW, DEFEND, INDEMNIFY AND HOLD DESIGN PATH STUDIO AND ITS ARCHITECTS HARMLESS FROM ANY AND ALL CLAIMS, SUITS, LIABILITY, DEMANDS, JUDGMENTS, OR COSTS ARISING OUT OF OR RESULTING THERE FROM ANY USE OF THESE CONSTRUCTION DOCUMENTS FOR OR ON ACCOUNT OF ANY INJURY, DEATH, DAMAGE OR LOSS TO PERSONS OR PROPERTY, DIRECT OR CONSEQUENTIAL DAMAGES IN ANY AMOUNT. THIS INDEMNITY DOES NOT APPLY TO THE SOLE NEGLIGENCE OR WILLFUL MISCONDUCT OF DESIGN PATH STUDIO OR ITS ARCHITECTS.
3. THE DESIGNS REPRESENTED BY THESE PLANS ARE COPYRIGHTED AND ARE SUBJECT TO COPYRIGHT PROTECTION.
4. IF THE RECIPIENT DOES NOT AGREE WITH THE ABOVE CONDITIONS, DO NOT PROCEED WITH CONSTRUCTION OF AN ADU OR OTHER IMPROVEMENT UNDER THESE PLANS AT ALL.

project
City of Perris
Pre-Approved
ADU Program

revisions

description
Craftsman
Foundation
& Framing
Plan (Reverse)

date 4 April 2025

project no. PERRIS PRADU

drawn by DESIGN PATH STUDIO

sheet no. S2R

FOR USE IN IN THE CITY OF PERRIS

NOTE
FOUNDATION, HOLD DOWN AND SHEAR WALL LOCATIONS, FRAMING SIZES AND SPACING TO REMAIN THE SAME AT ACCESSIBLE OPTION PLAN

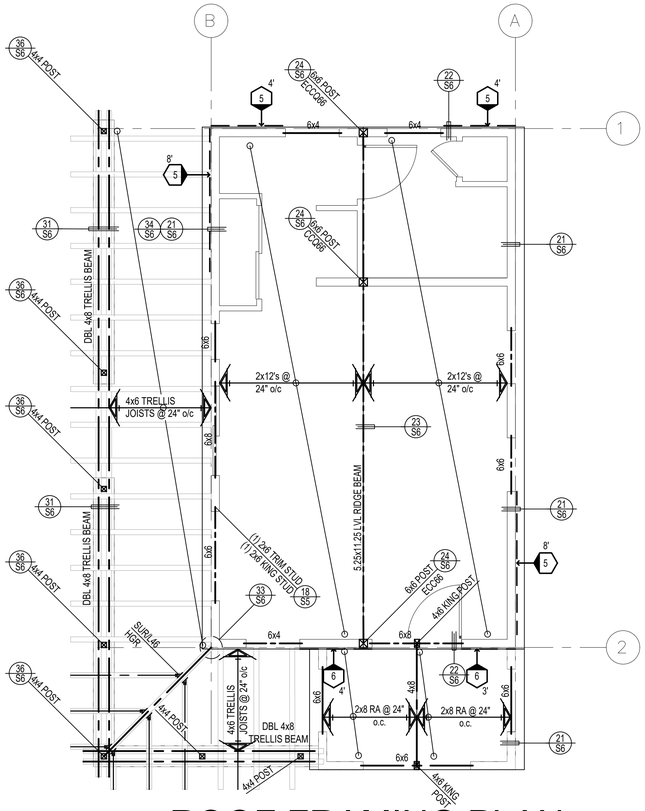

ROOF FRAMING PLAN

1/4"=1'-0" SPANISH

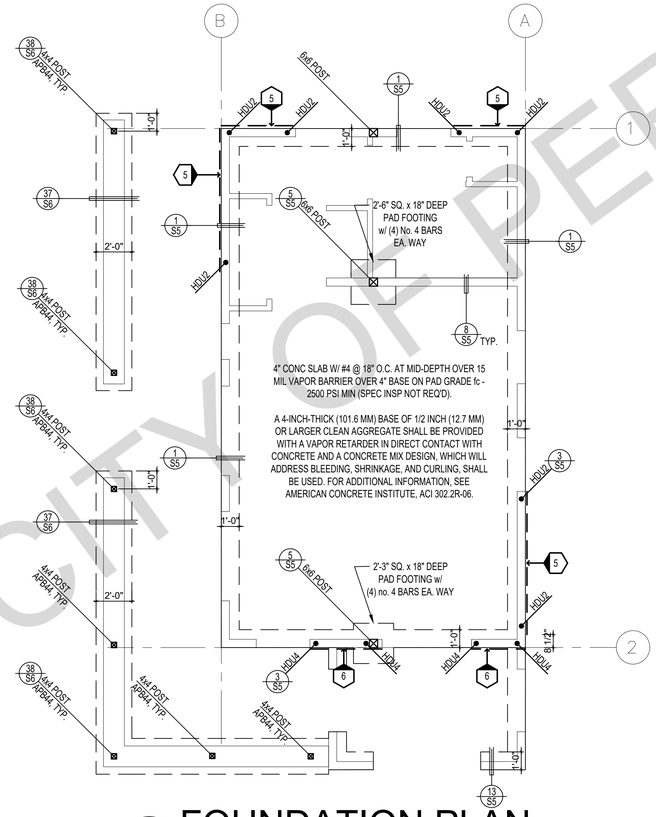

FOUNDATION PLAN

1/4"=1'-0" SPANISH

SHEAR WALL SCHEDULE (ASD VALUES)

	4	5	6	7	8	9
SHEARWALL DESCRIPTION (See footnotes 1& 4)	3/8" ply. C-D or C-C sheathing, (1) side w/ 8d @ 6" o/c edge, 12" o/c field, blocked (See footnotes 3 & 6)	3/8" ply. C-D or C-C sheathing, (1) side w/ 8d @ 4" o/c edge, 12" o/c field, blocked (See footnotes 3 & 6)	3/8" ply. C-D or C-C sheathing, (1) side w/ 8d @ 3" o/c edge, 12" o/c field 3x abutting panel studs blocked (See footnote 3,4, & 6)	7/16" rated STRUCT 1 panel, (1) side w/ 8d @ 3" o/c edge, 12" o/c field 3x abutting panel studs blocked (See footnote 3,4, & 6)	15/32" rated STRUCT 1 panel, (1) side w/ 10d @ 3" o/c edge, 12" o/c field 3x abutting panel studs blocked (See footnote 3, 4, 5, & 6)	15/32" rated STRUCT 1 panel, (1) side w/ 10d @ 2" o/c edge, 12" o/c field 3x abutting panel studs blocked (See footnote 3, 4, 5, & 6)
SHEAR VALUE (PLF)	260*	380*	490*	550*	665*	870*
ANCHOR BOLT SPACING	5/8" @ 48" or 1/2" @ 32"	5/8" @ 32" or 1/2" @ 24"	5/8" @ 24" or 1/2" @ 16"	5/8" @ 24" or 1/2" @ 16"	5/8" @ 16" or 1/2" @ 12"	5/8" @ 12" or 1/2" @ 8"
SPACING OF A35/LTP4 FRAMING TO TOP PLATE	30" O.C.	16" O.C.	12" O.C.	12" O.C.	8" O.C.	8" O.C.

FOUNDATION NOTES

1. ALL ANCHOR BOLTS, HOLDOWN ANCHORS, & REINF. MUST BE SECURELY TIED IN PLACE PRIOR TO FDTN. INSP.
2. ALL EXTERIOR STUDS TO BE 2x6 @ 16" O.C.
3. THE MINIMUM NOMINAL ANCHORBOLT DIAMETER SHALL BE 1/2 INCH NOTE: THIS WILL REQUIRE A MINIMUM DISTANCE FROM THE ENDS OF SILL PLATES TO BE 4" (AND A MAXIMUM OF 12")
4. PLATE WASHERS (MINIMUM SIZE OF 3" x 3" x 1/4") SHALL BE USED ON EACH ANCHOR BOLT.
5. PROVIDE CONC SLAB JOINTS AT NO MORE THAN 15 FT EA. WAY
6. SEE SHEET S5 FOR TYP. CONCRETE & SLAB DETAILS 1-8
7. POSTS W/O SPECIFIED BASE SHALL BE NAILED TO BOLTED SILL PLATES W/ (2) 16d T.N. EA SIDE, TYP.
8. FOOTINGS ADJACENT TO SLOPES GREATER THAN OR EQUAL TO 33.3% SHALL COMPLY WITH SETBACK REQUIREMENTS DEFINED IN CBC 1808.7.

SHEAR WALL FOOTNOTES

(1) AT PLYWOOD OR OSB PS-1 OR PS-2 RATED PANELS USE COMMON NAILS OR GALVANIZED BOX NAILS (2) LAYERS OF PAPER EXTERIOR PLYWOOD REQUIRED. SHEARSHALL BE APPLIED OVER STUDS @ 16" O/C. GALVANIZED NAILS SHALL NOT BE HOT-DIPPED OR TUMBLED.

(2) SILL PLATES & WASHERS SHALL COMPLY WITH THE CONCRETE FOUNDATION CONSTRUCTION AND WOOD FRAMING CONSTRUCTION NOTES. (SEE NOTES #206, 208, 209. 307, 308, 309, ETC.)

(3) IN PLYWOOD SHEARWALLS, THE EDGE OF THE 3" SQUARE WASHERS (SEE NOTE #206) SHALL BE 1/2" OR LESS FROM THE EDGE OF THE SILL PLATE ON THE SIDE OF THE SHEATHING. ALL NAILING SHALL BE 3/8" MIN. FROM THE EDGE OF SHEATHING.

(4) WHERE ALLOWABLE SHEAR VALUES EXCEED 350 PLF (SHEARWALL TYPES 6, 7, 8, & 9) ALL FRAMING RECEIVING NAILING FROM ABUTTING PANEL EDGES SHALL NOT BE LESS THAN A SINGLE 3" NOMINAL MEMBER OR (2) 2X MEMBERS NAILED WITH 10D , SPACING EQUAL TO THE E.N. SPACING. PLYWOOD JOINT AND SILL NAILING SHALL BE STAGGERED.

(5) IN SHEARWALL TYPES 8 & 9, SILL PLATE NAILING SHALL BE STAGGERED. AT SECOND FLOOR CONDITIONS, PROVIDE ADEQUATE RIM OR BLOCKING TO PREVENT SPLITTING.

(6) WHERE NOISE INSULATION IS REQUIRED, STRUCTURAL SHEAR PANELS TO BE UPGRADED TO 1/2" WSP, ALL OTHER EXTERIOR SURFACES TO BE SHEATH WITH GRADE D MIN. 1/2" SOLID SHEATHING WITH 6" O.C. EDGE NAILING, 12" O.C. FIELD NAILING.

(*) ALLOWABLE SHEAR VALUES FOR PLYWOOD SHEARWALLS MAY BE INCREASED BY 40% UNDER WIND LOADING.

LEGEND

- X' — SHEARWALL & A.B. SPACING PER SCHEDULE
- BOLT TYPE HOLDOWN
- BEARING OR EXTENT OF RAFTERS
- HANGER TO BEAM/LEDGER
- BEARING OR EXTENT OF JOISTS
- CALIFORNIA FILL FRAMING

* PLEASE REFER TO NOTES 311 & 401 ON S1 FOR LUMBER GRADE SPECIFICATIONS.

FOR USE IN IN THE CITY OF PERRIS

DESIGN PATH STUDIO
architecture + engineering + planning
DESIGNPATHSTUDIO.COM

BY USING THESE PERMIT READY CONSTRUCTION DOCUMENTS, THE RECIPIENT ACKNOWLEDGES, ACCEPTS AND VOLUNTARILY AFFIRMS THE FOLLOWING CONDITIONS:
1. THE USE OF THIS INFORMATION IS RESTRICTED TO THE ORIGINAL PROJECT FOR WHICH IT WAS PREPARED FOR THE PERMIT READY ACCESSORY DWELLING UNIT (ADU) PROGRAM FOR THE CITY OF PERRIS ONLY. THIS IS A LIMITED SET OF STANDARDIZED ADU PLANS AND SPECIFICATIONS APPROVED BY THE CITY OF PERRIS BUILDING DEPARTMENT. BUILDING CODES DO CHANGE OVER TIME AND RECIPIENT SHALL ENSURE FULL COMPLIANCE UNDER ALL CODES THEN IN EFFECT AT THE TIME OF THE SUBJECT PERMIT. THIS DOES NOT ELIMINATE OR REDUCE THE RECIPIENT'S RESPONSIBILITY TO VERIFY ANY AND ALL INFORMATION RELEVANT TO THE RECIPIENT'S WORK AND RESPONSIBILITY ON THIS PROJECT. DESIGN PATH STUDIO SHALL NOT BE RESPONSIBLE FOR TRANSLATION ERRORS. DO NOT USE THESE CONSTRUCTION DOCUMENTS IF THE PERMIT HAS EXPIRED OR IS REVOKED AT ALL.
2. THE RECIPIENT RECOGNIZES AND ACKNOWLEDGES THAT THE USE OF THIS INFORMATION WILL BE AT THEIR SOLE RISK AND WITHOUT ANY LIABILITY OR LEGAL EXPOSURE TO DESIGN PATH STUDIO. NO WARRANTIES OF ANY NATURE, WHETHER EXPRESS OR IMPLIED, SHALL ATTACH TO THESE DOCUMENTS AND THE INFORMATION CONTAINED THEREON. ANY USE, REUSE, OR ALTERATION OF THESE DOCUMENTS BY THE RECIPIENT OR BY OTHERS WILL BE AT THE RECIPIENT'S RISK AND FULL LEGAL RESPONSIBILITY. FURTHERMORE, THE RECIPIENT WILL, TO THE FULLEST EXTENT PERMITTED BY LAW, DEFEND, INDEMNIFY AND HOLD DESIGN PATH STUDIO AND ITS ARCHITECTS HARMLESS FROM ANY AND ALL CLAIMS, SUITS, LIABILITY, DEMANDS, JUDGMENTS, OR COSTS ARISING OUT OF OR RESULTING THERE FROM ANY USE OF THESE CONSTRUCTION DOCUMENTS FOR OR ON ACCOUNT OF ANY INJURY, DEATH, DAMAGE OR LOSS TO PERSONS OR PROPERTY, DIRECT OR CONSEQUENTIAL DAMAGES IN ANY AMOUNT. THIS INDEMNITY DOES NOT APPLY TO THE SOLE NEGLIGENCE OR WILLFUL MISCONDUCT OF DESIGN PATH STUDIO OR ITS ARCHITECTS.
3. THE DESIGNS REPRESENTED BY THESE PLANS ARE COPYRIGHTED AND ARE SUBJECT TO COPYRIGHT PROTECTION.
4. IF THE RECIPIENT DOES NOT AGREE WITH THE ABOVE CONDITIONS, DO NOT PROCEED WITH CONSTRUCTION OF AN ADU OR OTHER IMPROVEMENT UNDER THESE PLANS AT ALL.

project
City of Perris Pre-Approved ADU Program

revisions
0

description
Spanish Foundation & Framing Plan

date 4 April 2025

project no. PERRIS PRADU

drawn by DESIGN PATH STUDIO

sheet no. S3

NOTE
FOUNDATION, HOLD DOWN AND SHEAR WALL LOCATIONS, FRAMING SIZES AND SPACING TO REMAIN THE SAME AT ACCESSIBLE OPTION PLAN

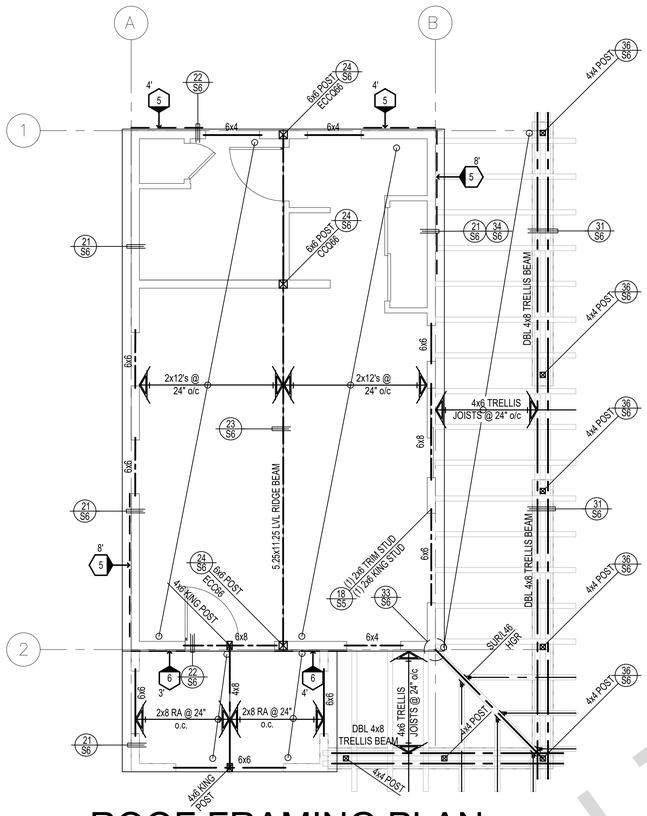

ROOF FRAMING PLAN

1/4"=1'-0" SPANISH REVERSE

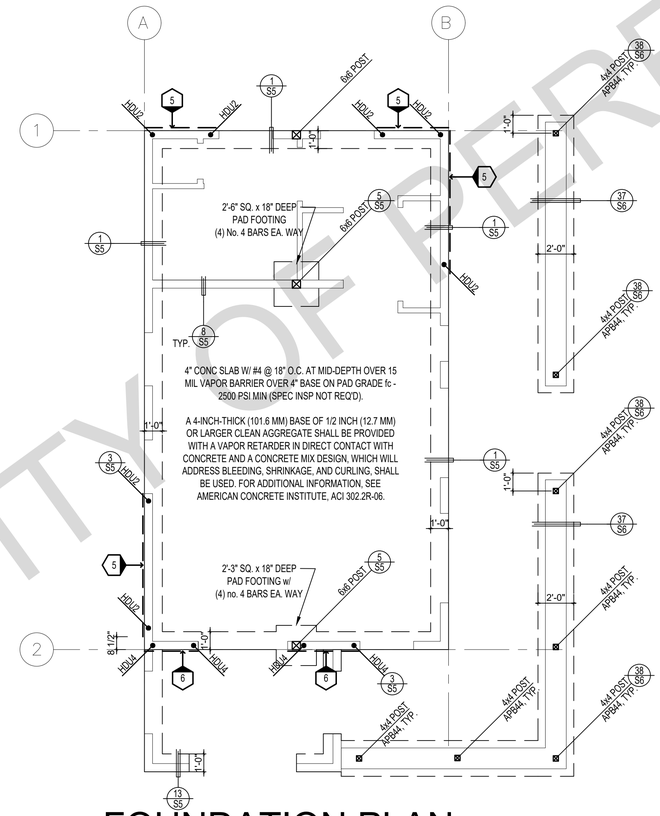

FOUNDATION PLAN

1/4"=1'-0" SPANISH REVERSE

FOUNDATION NOTES

1. ALL ANCHOR BOLTS, HOLDOWN ANCHORS, & REINF. MUST BE SECURELY TIED IN PLACE PRIOR TO FDTN. INSP.
2. ALL EXTERIOR STUDS TO BE 2x6 @ 16" O.C.
3. THE MINIMUM NOMINAL ANCHORBOLT DIAMETER SHALL BE 1/2 INCH NOTE: THIS WILL REQUIRE A MINIMUM DISTANCE FROM THE ENDS OF SILL PLATES TO BE 4" (AND A MAXIMUM OF 12")
4. PLATE WASHERS (MINIMUM SIZE OF 3" x 3" x 1/4") SHALL BE USED ON EACH ANCHOR BOLT.
5. PROVIDE CONC SLAB JOINTS AT NO MORE THAN 15 FT EA. WAY
6. SEE SHEET S5 FOR TYP. CONCRETE & SLAB DETAILS 1-8
7. POSTS W/O SPECIFIED BASE SHALL BE NAILED TO BOLTED SILL PLATES W/ (2) 16d T.N. EA SIDE, TYP.
8. FOOTINGS ADJACENT TO SLOPES GREATER THAN OR EQUAL TO 33.3% SHALL COMPLY WITH SETBACK REQUIREMENTS DEFINED IN CBC 1808.7.

SHEAR WALL SCHEDULE (ASD VALUES)

	4	5	6	7	8	9
SHEARWALL DESCRIPTION (See footnotes 1& 4)	3/8" ply. C-D or C-C sheathing, (1) side w/ 8d @ 6" o/c edge, 12" o/c field, blocked (See footnotes 3 & 6)	3/8" ply. C-D or C-C sheathing, (1) side w/ 8d @ 4" o/c edge, 12" o/c field, blocked (See footnotes 3 & 6)	3/8" ply. C-D or C-C sheathing, (1) side w/ 8d @ 3" o/c edge, 12" o/c field 3x abutting panel studs blocked (See footnote 3,4, & 6)	7/16" rated STRUCT 1 panel, (1) side w/ 8d @ 3" o/c edge, 12" o/c field 3x abutting panel studs blocked (See footnote 3,4, & 6)	15/32" rated STRUCT 1 panel, (1) side w/ 10d @ 3" o/c edge, 12" o/c field 3x abutting panel studs blocked (See footnote 3, 4, 5, & 6)	15/32" rated STRUCT 1 panel, (1) side w/ 10d @ 2" o/c edge, 12" o/c field 3x abutting panel studs blocked (See footnote 3, 4, 5, & 6)
SHEAR VALUE (PLF)	260*	380*	490*	550*	665*	870*
ANCHOR BOLT SPACING	5/8" @ 48" or 1/2" @ 32"	5/8" @ 32" or 1/2" @ 24"	5/8" @ 24" or 1/2" @ 16"	5/8" @ 24" or 1/2" @ 16"	5/8" @ 16" or 1/2" @ 12"	5/8" @ 12" or 1/2" @ 8"
SPACING OF A35/LTP4 FRAMING TO TOP PLATE	30" O.C.	16" O.C.	12" O.C.	12" O.C.	8" O.C.	8" O.C.

SHEAR WALL FOOTNOTES

(1) AT PLYWOOD OR OSB PS-1 OR PS-2 RATED PANELS USE COMMON NAILS OR GALVANIZED BOX NAILS (2) LAYERS OF PAPER EXTERIOR PLYWOOD REQUIRED. SHEARSHALL BE APPLIED OVER STUDS @ 16" O/C. GALVANIZED NAILS SHALL NOT BE HOT-DIPPED OR TUMBLED.

(2) SILL PLATES & WASHERS SHALL COMPLY WITH THE CONCRETE FOUNDATION CONSTRUCTION AND WOOD FRAMING CONSTRUCTION NOTES. (SEE NOTES #206, 208, 209. 307, 308, 309, ETC.)

(3) IN PLYWOOD SHEARWALLS, THE EDGE OF THE 3" SQUARE WASHERS (SEE NOTE #206) SHALL BE 1/2" OR LESS FROM THE EDGE OF THE SILL PLATE ON THE SIDE OF THE SHEATHING. ALL NAILING SHALL BE 3/8" MIN. FROM THE EDGE OF SHEATHING.

(4) WHERE ALLOWABLE SHEAR VALUES EXCEED 350 PLF (SHEARWALL TYPES 6, 7, 8, & 9) ALL FRAMING RECEIVING NAILING FROM ABUTTING PANEL EDGES SHALL NOT BE LESS THAN A SINGLE 3" NOMINAL MEMBER OR (2) 2X MEMBERS NAILED WITH 10D , SPACING EQUAL TO THE E.N. SPACING. PLYWOOD JOINT AND SILL NAILING SHALL BE STAGGERED.

(5) IN SHEARWALL TYPES 8 & 9, SILL PLATE NAILING SHALL BE STAGGERED. AT SECOND FLOOR CONDITIONS, PROVIDE ADEQUATE RIM OR BLOCKING TO PREVENT SPLITTING.

(6) WHERE NOISE INSULATION IS REQUIRED, STRUCTURAL SHEAR PANELS TO BE UPGRADED TO 1/2" WSP, ALL OTHER EXTERIOR SURFACES TO BE SHEATH WITH GRADE D MIN. 1/2" SOLID SHEATHING WITH 6" O.C. EDGE NAILING, 12" O.C. FIELD NAILING.

(*) ALLOWABLE SHEAR VALUES FOR PLYWOOD SHEARWALLS MAY BE INCREASED BY 40% UNDER WIND LOADING.

LEGEND

- X' — SHEARWALL & A.B. SPACING PER SCHEDULE
- BOLT TYPE HOLDOWN
- BEARING OR EXTENT OF RAFTERS
- HANGER TO BEAM/LEDGER
- BEARING OR EXTENT OF JOISTS
- CALIFORNIA FILL FRAMING

* PLEASE REFER TO NOTES 311 & 401 ON S1 FOR LUMBER GRADE SPECIFICATIONS.

DESIGN PATH STUDIO
architecture + engineering + planning
DESIGNPATHSTUDIO.COM

BY USING THESE PERMIT READY CONSTRUCTION DOCUMENTS, THE RECIPIENT ACKNOWLEDGES, ACCEPTS AND VOLUNTARILY AFFIRMS THE FOLLOWING CONDITIONS:
1. THE USE OF THIS INFORMATION IS RESTRICTED TO THE ORIGINAL PROJECT FOR WHICH IT WAS PREPARED FOR THE PERMIT READY ACCESSORY DWELLING UNIT (ADU) PROGRAM FOR THE CITY OF PERRIS ONLY. THIS IS A LIMITED SET OF STANDARDIZED ADU PLANS AND SPECIFICATIONS APPROVED BY THE CITY OF PERRIS BUILDING DEPARTMENT. BUILDING CODES DO CHANGE OVER TIME AND RECIPIENT SHALL ENSURE FULL COMPLIANCE UNDER ALL CODES THEN IN EFFECT AT THE TIME OF THE SUBJECT PERMIT. THIS DOES NOT ELIMINATE OR REDUCE THE RECIPIENT'S RESPONSIBILITY TO VERIFY ANY AND ALL INFORMATION RELEVANT TO THE RECIPIENT'S WORK AND RESPONSIBILITY ON THIS PROJECT. DESIGN PATH STUDIO SHALL NOT BE RESPONSIBLE FOR TRANSLATION ERRORS. DO NOT USE THESE CONSTRUCTION DOCUMENTS IF THE PERMIT HAS EXPIRED OR IS REVOKED AT ALL.
2. THE RECIPIENT RECOGNIZES AND ACKNOWLEDGES THAT THE USE OF THIS INFORMATION WILL BE AT THEIR SOLE RISK AND WITHOUT ANY LIABILITY OR LEGAL EXPOSURE TO DESIGN PATH STUDIO. NO WARRANTIES OF ANY NATURE, WHETHER EXPRESS OR IMPLIED, SHALL ATTACH TO THESE DOCUMENTS AND THE INFORMATION CONTAINED THEREON. ANY USE, REUSE, OR ALTERATION OF THESE DOCUMENTS BY THE RECIPIENT OR BY OTHERS WILL BE AT THE RECIPIENT'S RISK AND FULL LEGAL RESPONSIBILITY. FURTHERMORE, THE RECIPIENT WILL, TO THE FULLEST EXTENT PERMITTED BY LAW, DEFEND, INDEMNIFY AND HOLD DESIGN PATH STUDIO AND ITS ARCHITECTS HARMLESS FROM ANY AND ALL CLAIMS, SUITS, LIABILITY, DEMANDS, JUDGMENTS, OR COSTS ARISING OUT OF OR RESULTING THERE FROM ANY USE OF THESE CONSTRUCTION DOCUMENTS FOR OR ON ACCOUNT OF ANY INJURY, DEATH, DAMAGE OR LOSS TO PERSONS OR PROPERTY, DIRECT OR CONSEQUENTIAL DAMAGES IN ANY AMOUNT. THIS INDEMNITY DOES NOT APPLY TO THE SOLE NEGLIGENCE OR WILLFUL MISCONDUCT OF DESIGN PATH STUDIO OR ITS ARCHITECTS.
3. THE DESIGNS REPRESENTED BY THESE PLANS ARE COPYRIGHTED AND ARE SUBJECT TO COPYRIGHT PROTECTION.
4. IF THE RECIPIENT DOES NOT AGREE WITH THE ABOVE CONDITIONS, DO NOT PROCEED WITH CONSTRUCTION OF AN ADU OR OTHER IMPROVEMENT UNDER THESE PLANS AT ALL.

project
City of Perris Pre-Approved ADU Program

revisions
0
1
2
3
4

description
Spanish Foundation & Framing Plan (Reverse)

date 4 April 2025
project no. PERRIS PRADU
drawn by DESIGN PATH STUDIO
sheet no. S3R

FOR USE IN IN THE CITY OF PERRIS

NOTE
FOUNDATION, HOLD DOWN AND SHEAR WALL LOCATIONS, FRAMING SIZES AND SPACING TO REMAIN THE SAME AT ACCESSIBLE OPTION PLAN

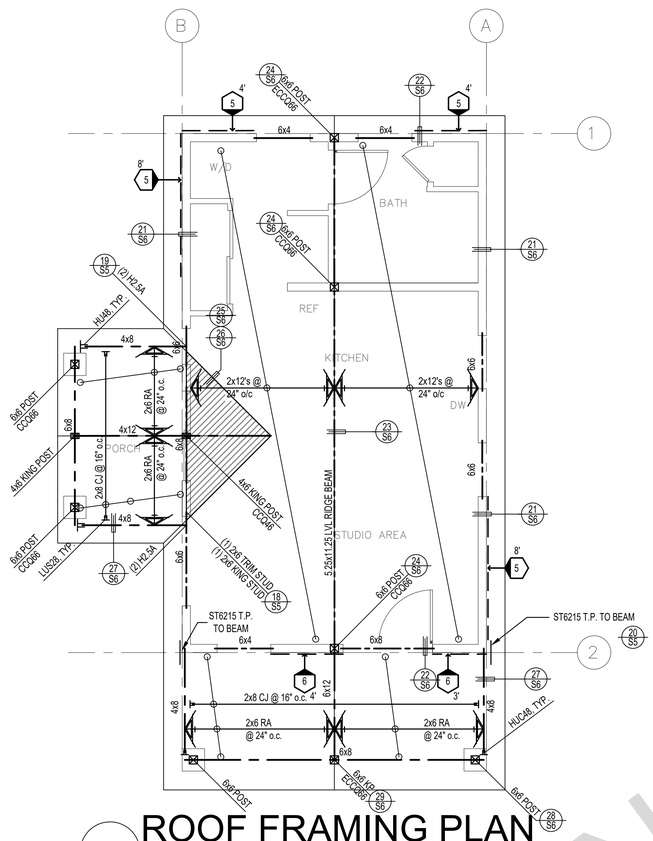

ROOF FRAMING PLAN

1/4"=1'-0" TRADITIONAL

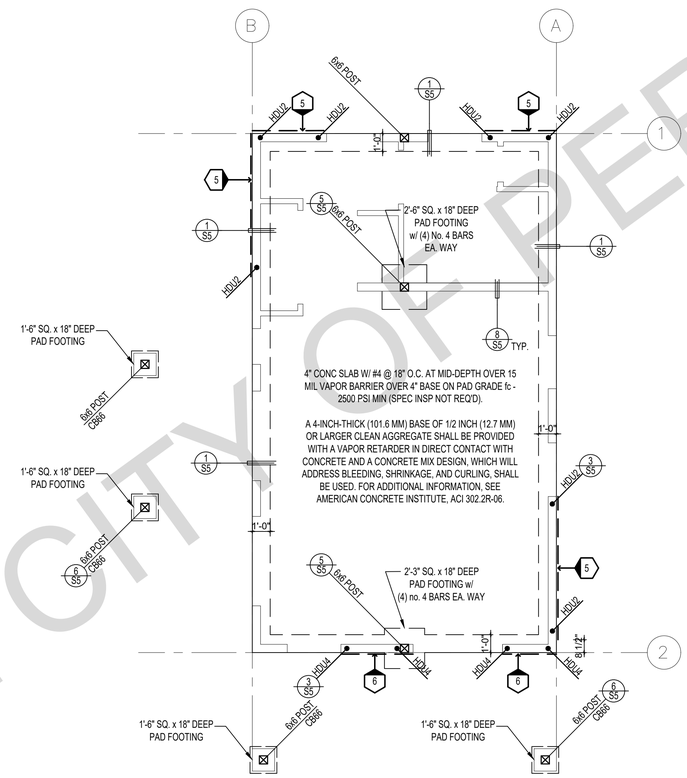

FOUNDATION PLAN

1/4"=1'-0" TRADITIONAL

SHEAR WALL SCHEDULE (ASD VALUES)

	4	5	6	7	8	9
SHEARWALL DESCRIPTION (See footnotes 1& 4)	3/8" ply. C-D or C-C sheathing, (1) side w/ 8d @ 6" o/c edge, 12" o/c field, blocked (See footnotes 3 & 6)	3/8" ply. C-D or C-C sheathing, (1) side w/ 8d @ 4" o/c edge, 12" o/c field, blocked (See footnotes 3 & 6)	3/8" ply. C-D or C-C sheathing, (1) side w/ 8d @ 3" o/c edge, 12" o/c field 3x abutting panel studs blocked (See footnote 3,4, & 6)	7/16" rated STRUCT 1 panel, (1) side w/ 8d @ 3" o/c edge, 12" o/c field 3x abutting panel studs blocked (See footnote 3,4, & 6)	15/32" rated STRUCT 1 panel, (1) side w/ 10d @ 3" o/c edge, 12" o/c field 3x abutting panel studs blocked (See footnote 3, 4, 5, & 6)	15/32" rated STRUCT 1 panel, (1) side w/ 10d @ 2" o/c edge, 12" o/c field 3x abutting panel studs blocked (See footnote 3, 4, 5, & 6)
SHEAR VALUE (PLF)	260*	380*	490*	550*	665*	870*
ANCHOR BOLT SPACING	5/8" @ 48" or 1/2" @ 32"	5/8" @ 32" or 1/2" @ 24"	5/8" @ 24" or 1/2" @ 16"	5/8" @ 24" or 1/2" @ 16"	5/8" @ 16" or 1/2" @ 12"	5/8" @ 12" or 1/2" @ 8"
SPACING OF A35/LTP4 FRAMING TO TOP PLATE	30" O.C.	16" O.C.	12" O.C.	12" O.C.	8" O.C.	8" O.C.

FOUNDATION NOTES

1. ALL ANCHOR BOLTS, HOLDOWN ANCHORS, & REINF. MUST BE SECURELY TIED IN PLACE PRIOR TO FDTN. INSP.
2. ALL EXTERIOR STUDS TO BE 2x6 @ 16" O.C.
3. THE MINIMUM NOMINAL ANCHORBOLT DIAMETER SHALL BE 1/2 INCH NOTE: THIS WILL REQUIRE A MINIMUM DISTANCE FROM THE ENDS OF SILL PLATES TO BE 4" (AND A MAXIMUM OF 12")
4. PLATE WASHERS (MINIMUM SIZE OF 3" x 3" x 1/4") SHALL BE USED ON EACH ANCHOR BOLT.
5. PROVIDE CONC SLAB JOINTS AT NO MORE THAN 15 FT EA. WAY
6. SEE SHEET S5 FOR TYP. CONCRETE & SLAB DETAILS 1-8
7. POSTS W/O SPECIFIED BASE SHALL BE NAILED TO BOLTED SILL PLATES W/ (2) 16d T.N. EA SIDE, TYP.
8. FOOTINGS ADJACENT TO SLOPES GREATER THAN OR EQUAL TO 33.3% SHALL COMPLY WITH SETBACK REQUIREMENTS DEFINED IN CBC 1808.7.

SHEAR WALL FOOTNOTES

(1) AT PLYWOOD OR OSB PS-1 OR PS-2 RATED PANELS USE COMMON NAILS OR GALVANIZED BOX NAILS (2) LAYERS OF PAPER EXTERIOR PLYWOOD REQUIRED. SHEARSHALL BE APPLIED OVER STUDS @ 16" O/C. GALVANIZED NAILS SHALL NOT BE HOT-DIPPED OR TUMBLED.

(2) SILL PLATES & WASHERS SHALL COMPLY WITH THE CONCRETE FOUNDATION CONSTRUCTION AND WOOD FRAMING CONSTRUCTION NOTES. (SEE NOTES #206, 208, 209. 307, 308, 309, ETC.)

(3) IN PLYWOOD SHEARWALLS, THE EDGE OF THE 3" SQUARE WASHERS (SEE NOTE #206) SHALL BE 1/2" OR LESS FROM THE EDGE OF THE SILL PLATE ON THE SIDE OF THE SHEATHING. ALL NAILING SHALL BE 3/8" MIN. FROM THE EDGE OF SHEATHING.

(4) WHERE ALLOWABLE SHEAR VALUES EXCEED 350 PLF (SHEARWALL TYPES 6, 7, 8, & 9) ALL FRAMING RECEIVING NAILING FROM ABUTTING PANEL EDGES SHALL NOT BE LESS THAN A SINGLE 3" NOMINAL MEMBER OR (2) 2X MEMBERS NAILED WITH 10D , SPACING EQUAL TO THE E.N. SPACING. PLYWOOD JOINT AND SILL NAILING SHALL BE STAGGERED.

(5) IN SHEARWALL TYPES 8 & 9, SILL PLATE NAILING SHALL BE STAGGERED. AT SECOND FLOOR CONDITIONS, PROVIDE ADEQUATE RIM OR BLOCKING TO PREVENT SPLITTING.

(6) WHERE NOISE INSULATION IS REQUIRED, STRUCTURAL SHEAR PANELS TO BE UPGRADED TO 1/2" WSP, ALL OTHER EXTERIOR SURFACES TO BE SHEATH WITH GRADE D MIN. 1/2" SOLID SHEATHING WITH 6" O.C. EDGE NAILING, 12" O.C. FIELD NAILING.

(*) ALLOWABLE SHEAR VALUES FOR PLYWOOD SHEARWALLS MAY BE INCREASED BY 40% UNDER WIND LOADING.

LEGEND

- SHEARWALL & A.B. SPACING PER SCHEDULE
- BOLT TYPE HOLDOWN
- BEARING OR EXTENT OF RAFTERS
- HANGER TO BEAM/LEDGER
- BEARING OR EXTENT OF JOISTS
- CALIFORNIA FILL FRAMING

* PLEASE REFER TO NOTES 311 & 401 ON S1 FOR LUMBER GRADE SPECIFICATIONS.

FOR USE IN IN THE CITY OF PERRIS

DESIGN PATH STUDIO
architecture + engineering + planning
DESIGNPATHSTUDIO.COM

BY USING THESE PERMIT READY CONSTRUCTION DOCUMENTS, THE RECIPIENT ACKNOWLEDGES, ACCEPTS AND VOLUNTARILY AFFIRMS THE FOLLOWING CONDITIONS:
1. THE USE OF THIS INFORMATION IS RESTRICTED TO THE ORIGINAL PROJECT FOR WHICH IT WAS PREPARED FOR THE PERMIT READY ACCESSORY DWELLING UNIT (ADU) PROGRAM FOR THE CITY OF PERRIS ONLY. THIS IS A LIMITED SET OF STANDARDIZED ADU PLANS AND SPECIFICATIONS APPROVED BY THE CITY OF PERRIS BUILDING DEPARTMENT. BUILDING CODES DO CHANGE OVER TIME AND RECIPIENT SHALL ENSURE FULL COMPLIANCE UNDER ALL CODES THEN IN EFFECT AT THE TIME OF THE SUBJECT PERMIT. THIS DOES NOT ELIMINATE OR REDUCE THE RECIPIENT'S RESPONSIBILITY TO VERIFY ANY AND ALL INFORMATION RELEVANT TO THE RECIPIENT'S WORK AND RESPONSIBILITY ON THIS PROJECT. DESIGN PATH STUDIO SHALL NOT BE RESPONSIBLE FOR TRANSLATION ERRORS. DO NOT USE THESE CONSTRUCTION DOCUMENTS IF THE PERMIT HAS EXPIRED OR IS REVOKED AT ALL.
2. THE RECIPIENT RECOGNIZES AND ACKNOWLEDGES THAT THE USE OF THIS INFORMATION WILL BE AT THEIR SOLE RISK AND WITHOUT ANY LIABILITY OR LEGAL EXPOSURE TO DESIGN PATH STUDIO. NO WARRANTIES OF ANY NATURE, WHETHER EXPRESS OR IMPLIED, SHALL ATTACH TO THESE DOCUMENTS AND THE INFORMATION CONTAINED THEREON. ANY USE, REUSE, OR ALTERATION OF THESE DOCUMENTS BY THE RECIPIENT OR BY OTHERS WILL BE AT THE RECIPIENT'S RISK AND FULL LEGAL RESPONSIBILITY. FURTHERMORE, THE RECIPIENT WILL, TO THE FULLEST EXTENT PERMITTED BY LAW, DEFEND, INDEMNIFY AND HOLD DESIGN PATH STUDIO AND ITS ARCHITECTS HARMLESS FROM ANY AND ALL CLAIMS, SUITS, LIABILITY, DEMANDS, JUDGMENTS, OR COSTS ARISING OUT OF OR RESULTING THERE FROM ANY USE OF THESE CONSTRUCTION DOCUMENTS FOR OR ON ACCOUNT OF ANY INJURY, DEATH, DAMAGE OR LOSS TO PERSONS OR PROPERTY, DIRECT OR CONSEQUENTIAL DAMAGES IN ANY AMOUNT. THIS INDEMNITY DOES NOT APPLY TO THE SOLE NEGLIGENCE OR WILLFUL MISCONDUCT OF DESIGN PATH STUDIO OR ITS ARCHITECTS.
3. THE DESIGNS REPRESENTED BY THESE PLANS ARE COPYRIGHTED AND ARE SUBJECT TO COPYRIGHT PROTECTION.
4. IF THE RECIPIENT DOES NOT AGREE WITH THE ABOVE CONDITIONS, DO NOT PROCEED WITH CONSTRUCTION OF AN ADU OR OTHER IMPROVEMENT UNDER THESE PLANS AT ALL.

project
City of Perris Pre-Approved ADU Program

revisions

description
Traditional Foundation & Framing Plan

date 4 April 2025

project no. PERRIS PRADU

drawn by DESIGN PATH STUDIO

sheet no. S4

NOTE
FOUNDATION, HOLD DOWN AND SHEAR WALL LOCATIONS, FRAMING SIZES AND SPACING TO REMAIN THE SAME AT ACCESSIBLE OPTION PLAN

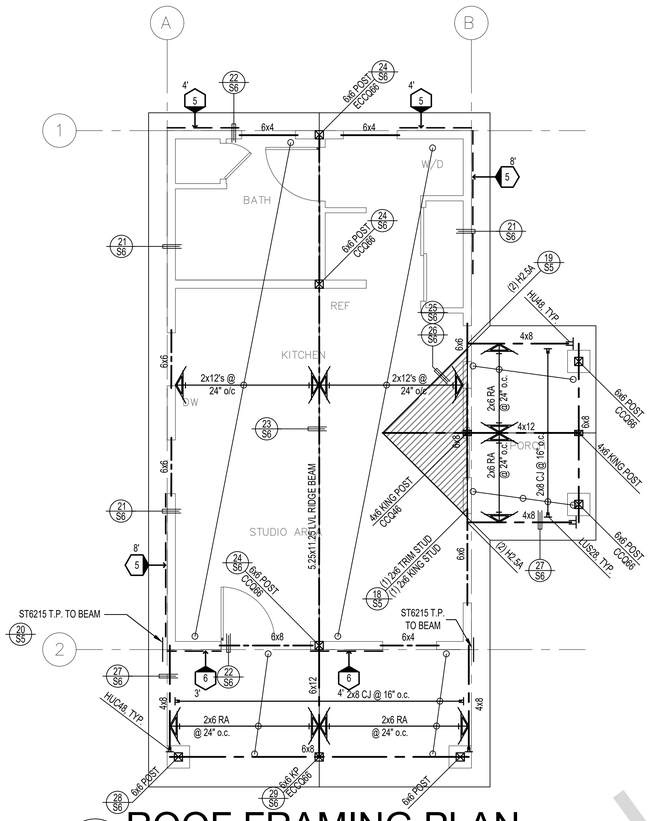

ROOF FRAMING PLAN

1/4"=1'-0" TRADITIONAL REVERSE

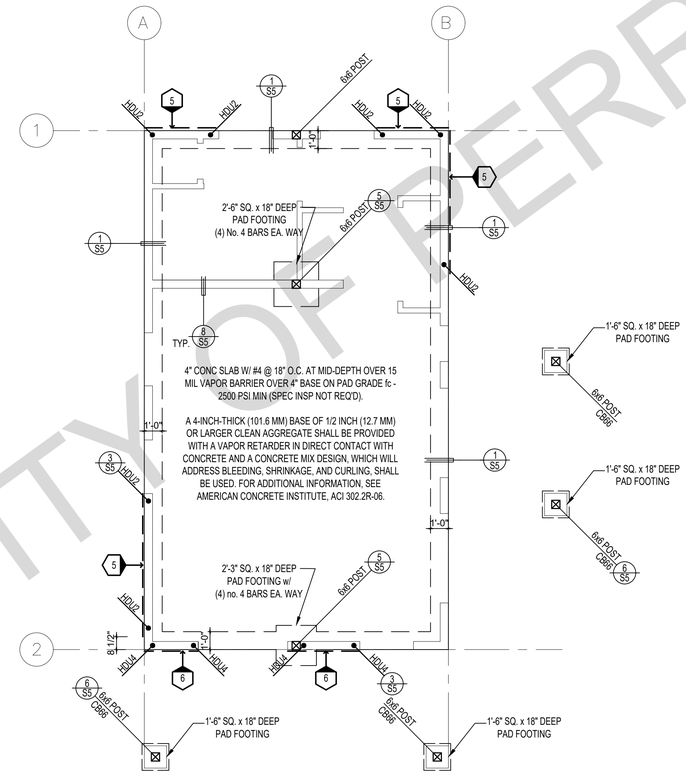

FOUNDATION PLAN

1/4"=1'-0" TRADITIONAL REVERSE

SHEAR WALL SCHEDULE (ASD VALUES)

	4	5	6	7	8	9
SHEARWALL DESCRIPTION (See footnotes 1& 4)	3/8" ply. C-D or C-C sheathing, (1) side w/ 8d @ 6" o/c edge, 12" o/c field, blocked (See footnotes 3 & 6)	3/8" ply. C-D or C-C sheathing, (1) side w/ 8d @ 4" o/c edge, 12" o/c field, blocked (See footnotes 3 & 6)	3/8" ply. C-D or C-C sheathing, (1) side w/ 8d @ 3" o/c edge, 12" o/c field 3x abutting panel studs blocked (See footnote 3,4, & 6)	7/16" rated STRUCT 1 panel, (1) side w/ 8d @ 3" o/c edge, 12" o/c field 3x abutting panel studs blocked (See footnote 3,4, & 6)	15/32" rated STRUCT 1 panel, (1) side w/ 10d @ 3" o/c edge, 12" o/c field 3x abutting panel studs blocked (See footnote 3, 4, 5, & 6)	15/32" rated STRUCT 1 panel, (1) side w/ 10d @ 2" o/c edge, 12" o/c field 3x abutting panel studs blocked (See footnote 3, 4, 5, & 6)
SHEAR VALUE (PLF)	260*	380*	490*	550*	665*	870*
ANCHOR BOLT SPACING	5/8" @ 48" or 1/2" @ 32"	5/8" @ 32" or 1/2" @ 24"	5/8" @ 24" or 1/2" @ 16"	5/8" @ 24" or 1/2" @ 16"	5/8" @ 16" or 1/2" @ 12"	5/8" @ 12" or 1/2" @ 8"
SPACING OF A35/LTP4 FRAMING TO TOP PLATE	30" O.C.	16" O.C.	12" O.C.	12" O.C.	8" O.C.	8" O.C.

FOUNDATION NOTES

1. ALL ANCHOR BOLTS, HOLDOWN ANCHORS, & REINF. MUST BE SECURELY TIED IN PLACE PRIOR TO FDTN. INSP.
2. ALL EXTERIOR STUDS TO BE 2x6 @ 16" O.C.
3. THE MINIMUM NOMINAL ANCHORBOLT DIAMETER SHALL BE 1/2 INCH NOTE: THIS WILL REQUIRE A MINIMUM DISTANCE FROM THE ENDS OF SILL PLATES TO BE 4" (AND A MAXIMUM OF 12")
4. PLATE WASHERS (MINIMUM SIZE OF 3" x 3" x 1/4") SHALL BE USED ON EACH ANCHOR BOLT.
5. PROVIDE CONC SLAB JOINTS AT NO MORE THAN 15 FT EA. WAY
6. SEE SHEET S5 FOR TYP. CONCRETE & SLAB DETAILS 1-8
7. POSTS W/O SPECIFIED BASE SHALL BE NAILED TO BOLTED SILL PLATES W/ (2) 16d T.N. EA SIDE, TYP.
8. FOOTINGS ADJACENT TO SLOPES GREATER THAN OR EQUAL TO 33.3% SHALL COMPLY WITH SETBACK REQUIREMENTS DEFINED IN CBC 1808.7.

SHEAR WALL FOOTNOTES

(1) AT PLYWOOD OR OSB PS-1 OR PS-2 RATED PANELS USE COMMON NAILS OR GALVANIZED BOX NAILS (2) LAYERS OF PAPER EXTERIOR PLYWOOD REQUIRED. SHEARSHALL BE APPLIED OVER STUDS @ 16" O/C. GALVANIZED NAILS SHALL NOT BE HOT-DIPPED OR TUMBLED.

(2) SILL PLATES & WASHERS SHALL COMPLY WITH THE CONCRETE FOUNDATION CONSTRUCTION AND WOOD FRAMING CONSTRUCTION NOTES. (SEE NOTES #206, 208, 209. 307, 308, 309, ETC.)

(3) IN PLYWOOD SHEARWALLS, THE EDGE OF THE 3" SQUARE WASHERS (SEE NOTE #206) SHALL BE 1/2" OR LESS FROM THE EDGE OF THE SILL PLATE ON THE SIDE OF THE SHEATHING. ALL NAILING SHALL BE 3/8" MIN. FROM THE EDGE OF SHEATHING.

(4) WHERE ALLOWABLE SHEAR VALUES EXCEED 350 PLF (SHEARWALL TYPES 6, 7, 8, & 9) ALL FRAMING RECEIVING NAILING FROM ABUTTING PANEL EDGES SHALL NOT BE LESS THAN A SINGLE 3" NOMINAL MEMBER OR (2) 2X MEMBERS NAILED WITH 10D , SPACING EQUAL TO THE E.N. SPACING. PLYWOOD JOINT AND SILL NAILING SHALL BE STAGGERED.

(5) IN SHEARWALL TYPES 8 & 9, SILL PLATE NAILING SHALL BE STAGGERED. AT SECOND FLOOR CONDITIONS, PROVIDE ADEQUATE RIM OR BLOCKING TO PREVENT SPLITTING.

(6) WHERE NOISE INSULATION IS REQUIRED, STRUCTURAL SHEAR PANELS TO BE UPGRADED TO 1/2" WSP, ALL OTHER EXTERIOR SURFACES TO BE SHEATH WITH GRADE D MIN. 1/2" SOLID SHEATHING WITH 6" O.C. EDGE NAILING, 12" O.C. FIELD NAILING.

(*) ALLOWABLE SHEAR VALUES FOR PLYWOOD SHEARWALLS MAY BE INCREASED BY 40% UNDER WIND LOADING.

LEGEND

- X' — SHEARWALL & A.B. SPACING PER SCHEDULE
- BOLT TYPE HOLDOWN
- BEARING OR EXTENT OF RAFTERS
- HANGER TO BEAM/LEDGER
- BEARING OR EXTENT OF JOISTS
- CALIFORNIA FILL FRAMING

* PLEASE REFER TO NOTES 311 & 401 ON S1 FOR LUMBER GRADE SPECIFICATIONS.

FOR USE IN IN THE CITY OF PERRIS

DESIGN PATH STUDIO
architecture + engineering + planning
DESIGNPATHSTUDIO.COM

BY USING THESE PERMIT READY CONSTRUCTION DOCUMENTS, THE RECIPIENT ACKNOWLEDGES, ACCEPTS AND VOLUNTARILY AFFIRMS THE FOLLOWING CONDITIONS:
1. THE USE OF THIS INFORMATION IS RESTRICTED TO THE ORIGINAL PROJECT FOR WHICH IT WAS PREPARED FOR THE PERMIT READY ACCESSORY DWELLING UNIT (ADU) PROGRAM FOR THE CITY OF PERRIS ONLY. THIS IS A LIMITED SET OF STANDARDIZED ADU PLANS AND SPECIFICATIONS APPROVED BY THE CITY OF PERRIS BUILDING DEPARTMENT. BUILDING CODES DO CHANGE OVER TIME AND RECIPIENT SHALL ENSURE FULL COMPLIANCE UNDER ALL CODES THEN IN EFFECT AT THE TIME OF THE SUBJECT PERMIT. THIS DOES NOT ELIMINATE OR REDUCE THE RECIPIENT'S RESPONSIBILITY TO VERIFY ANY AND ALL INFORMATION RELEVANT TO THE RECIPIENT'S WORK AND RESPONSIBILITY ON THIS PROJECT. DESIGN PATH STUDIO SHALL NOT BE RESPONSIBLE FOR TRANSLATION ERRORS. DO NOT USE THESE CONSTRUCTION DOCUMENTS IF THE PERMIT HAS EXPIRED OR IS REVOKED AT ALL.
2. THE RECIPIENT RECOGNIZES AND ACKNOWLEDGES THAT THE USE OF THIS INFORMATION WILL BE AT THEIR SOLE RISK AND WITHOUT ANY LIABILITY OR LEGAL EXPOSURE TO DESIGN PATH STUDIO. NO WARRANTIES OF ANY NATURE, WHETHER EXPRESS OR IMPLIED, SHALL ATTACH TO THESE DOCUMENTS AND THE INFORMATION CONTAINED THEREON. ANY USE, REUSE, OR ALTERATION OF THESE DOCUMENTS BY THE RECIPIENT OR BY OTHERS WILL BE AT THE RECIPIENT'S RISK AND FULL LEGAL RESPONSIBILITY. FURTHERMORE, THE RECIPIENT WILL, TO THE FULLEST EXTENT PERMITTED BY LAW, DEFEND, INDEMNIFY AND HOLD DESIGN PATH STUDIO AND ITS ARCHITECTS HARMLESS FROM ANY AND ALL CLAIMS, SUITS, LIABILITY, DEMANDS, JUDGMENTS, OR COSTS ARISING OUT OF OR RESULTING THERE FROM ANY USE OF THESE CONSTRUCTION DOCUMENTS FOR OR ON ACCOUNT OF ANY INJURY, DEATH, DAMAGE OR LOSS TO PERSONS OR PROPERTY, DIRECT OR CONSEQUENTIAL DAMAGES IN ANY AMOUNT. THIS INDEMNITY DOES NOT APPLY TO THE SOLE NEGLIGENCE OR WILLFUL MISCONDUCT OF DESIGN PATH STUDIO OR ITS ARCHITECTS.
3. THE DESIGNS REPRESENTED BY THESE PLANS ARE COPYRIGHTED AND ARE SUBJECT TO COPYRIGHT PROTECTION.
4. IF THE RECIPIENT DOES NOT AGREE WITH THE ABOVE CONDITIONS, DO NOT PROCEED WITH CONSTRUCTION OF AN ADU OR OTHER IMPROVEMENT UNDER THESE PLANS AT ALL.

project
City of Perris Pre-Approved ADU Program

revisions
0
1
2
3
4

description
Traditional Foundation & Framing Plan (Reverse)

date 4 April 2025
project no. PERRIS PRADU
drawn by DESIGN PATH STUDIO
sheet no. S4R

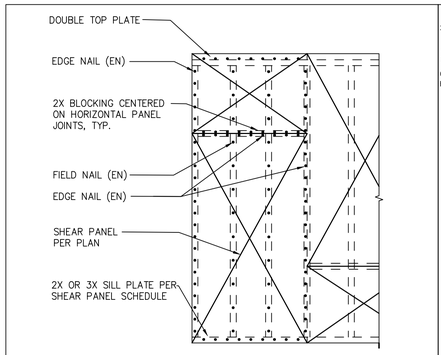

17 TYPICAL SHEAR PANEL

SCALE: NTS

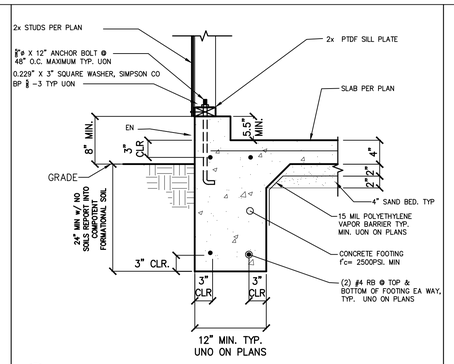

13 EXTERIOR WALL AT PORCH FOOTING

SCALE: 1"=1'-0"

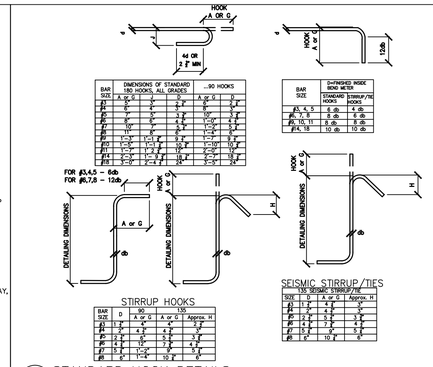

9 STANDARD HOOK DETAILS

SCALE: NTS

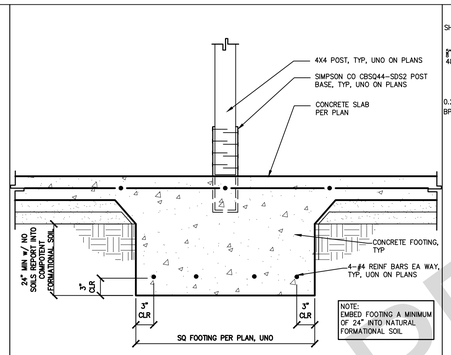

5 POST FOOTING WITHIN SLAB

SCALE: 1"=1'-0"

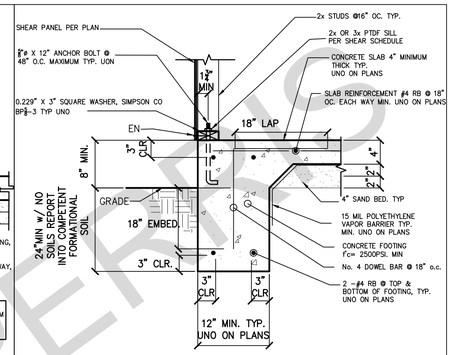

1 EXTERIOR FOOTING, TYPICAL

SCALE: 1"=1'-0"

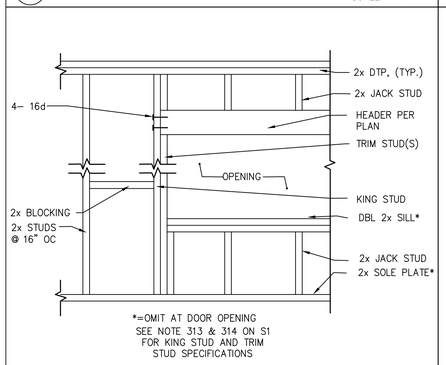

18 FRAMING FOR ROUGH WINDOW OR DOOR OPENING

SCALE: 1½"=1'-0"

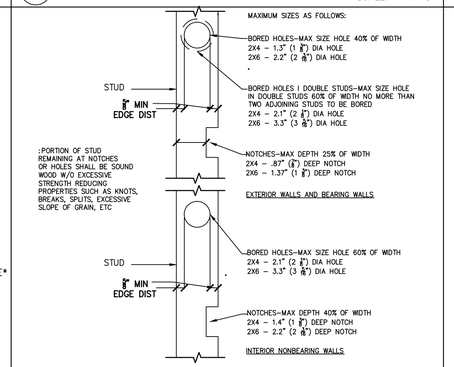

14 STUD CUTTING, BORING AND NOTCHING

SCALE: 1"=1'-0"

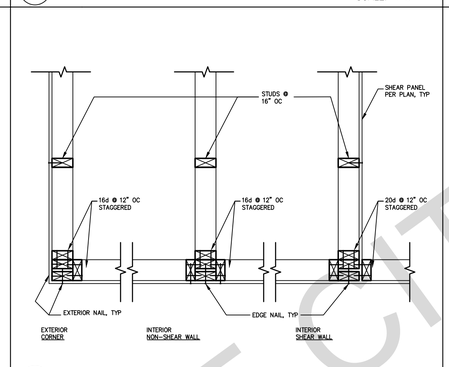

10 STUD WALL INTERSECTION

SCALE: 1"=1'-0"

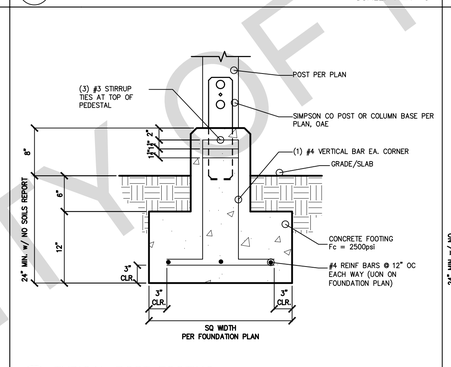

6 TYPICAL POST FOOTING

SCALE: 1"=1'-0"

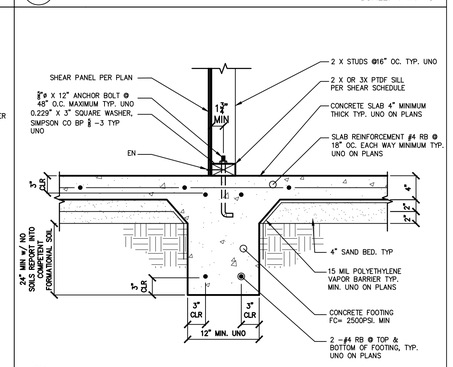

2 SLAB ON GRADE ONE STORY INTERIOR FOOTING

SCALE: 1"=1'-0"

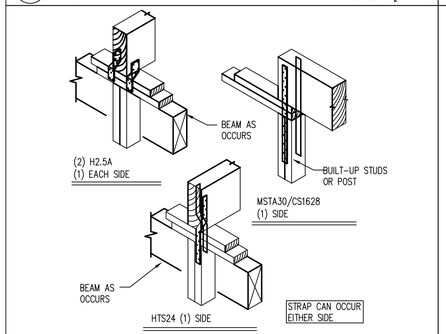

19 SUPPORT COLUMN TO BEAM

SCALE: 1"=1'-0"

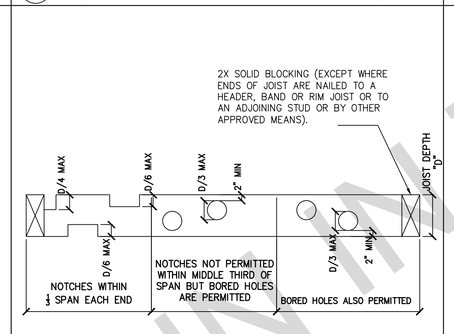

15 JOIST CUTTING, BORING AND NOTCHING

SCALE: NTS

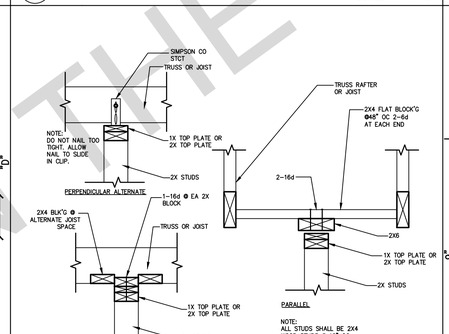

11 NON-BEARING/NON-SHEAR PARTITIONS AT TOP PLATE

SCALE: 1"=1'-0"

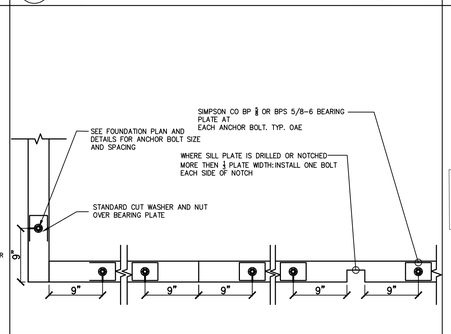

7 SILL PLATE ANCHOR BOLTING

SCALE: 1"=1'-0"

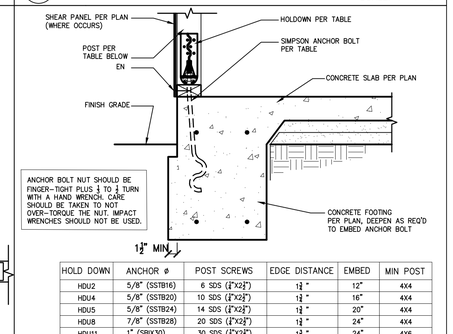

HOLD DOWN	ANCHOR ø	POST SCREWS	EDGE DISTANCE	EMBED	MIN POST
HDU2	5/8" (SSTB16)	6 SDS (¼"x2½")	1¾"	12"	4X4
HDU4	5/8" (SSTB20)	10 SDS (¼"x2½")	1¾"	16"	4X4
HDU5	5/8" (SSTB24)	14 SDS (¼"x2½")	1¾"	20"	4X4
HDU8	7/8" (SSTB28)	20 SDS (¼"x2½")	1¾"	24"	4X4
HDU11	1" (SBIX30)	30 SDS (¼"x2½")	1¾"	24"	4X6
HDU14	1" (SBIX30)	36 SDS (¼"x2½")	1¾"	24"	4X8/6X6

3 HOLDOWN – PERIMETER FOOTING

SCALE: 1"=1'-0"

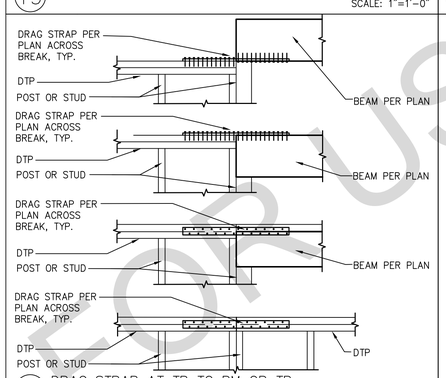

20 DRAG STRAP AT TP TO BM OR TP

SCALE: 1"=1'-0"

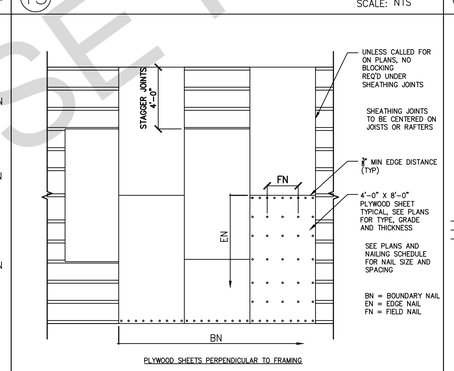

16 WOOD ROOF AND FLOOR SHEATHING LAYOUT

SCALE: 1"=1'-0"

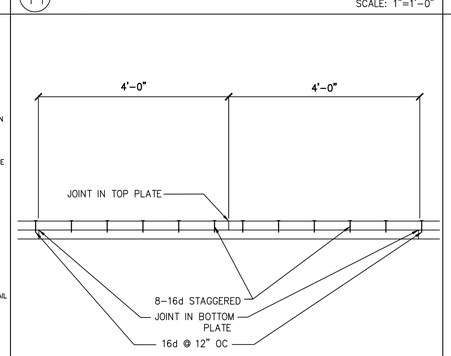

12 DOUBLE TOP-PLATE SPLICE

SCALE: NTS

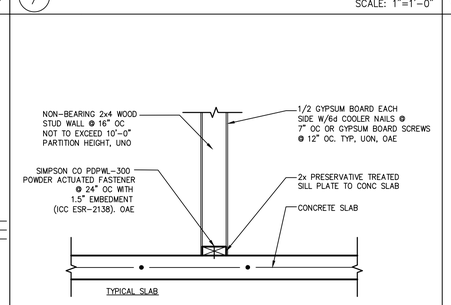

8 NON-BEARING INTERIOR STUD WALL TO CONCRETE SLAB

SCALE: 1"=1'-0"

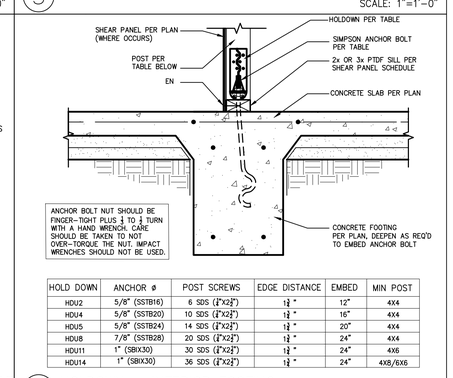

HOLD DOWN	ANCHOR ø	POST SCREWS	EDGE DISTANCE	EMBED	MIN POST
HDU2	5/8" (SSTB16)	6 SDS (¼"x2½")	1¾"	12"	4X4
HDU4	5/8" (SSTB20)	10 SDS (¼"x2½")	1¾"	16"	4X4
HDU5	5/8" (SSTB24)	14 SDS (¼"x2½")	1¾"	20"	4X4
HDU8	7/8" (SSTB28)	20 SDS (¼"x2½")	1¾"	24"	4X4
HDU11	1" (SBIX30)	30 SDS (¼"x2½")	1¾"	24"	4X6
HDU14	1" (SBIX30)	36 SDS (¼"x2½")	1¾"	24"	4X8/6X6

4 HOLDOWN – INTERIOR FOOTING

SCALE: 1"=1'-0"

FOR USE IN THE CITY OF PERRIS

DESIGN PATH STUDIO
architecture + engineering + planning
DESIGNPATHSTUDIO.COM

BY USING THESE PERMIT READY CONSTRUCTION DOCUMENTS, THE RECIPIENT ACKNOWLEDGES, ACCEPTS AND VOLUNTARILY AFFIRMS THE FOLLOWING CONDITIONS:
1. THE USE OF THIS INFORMATION IS RESTRICTED TO THE ORIGINAL PROJECT FOR WHICH IT WAS PREPARED FOR THE PERMIT READY ACCESSORY DWELLING UNIT (ADU) PROGRAM FOR THE CITY OF PERRIS ONLY. THIS IS A LIMITED SET OF STANDARDIZED ADU PLANS AND SPECIFICATIONS APPROVED BY THE CITY OF PERRIS BUILDING DEPARTMENT. BUILDING CODES DO CHANGE OVER TIME AND RECIPIENT SHALL ENSURE FULL COMPLIANCE UNDER ALL CODES THEN IN EFFECT AT THE TIME OF THE SUBJECT PERMIT. THIS DOES NOT ELIMINATE OR REDUCE THE RECIPIENT'S RESPONSIBILITY TO VERIFY ANY AND ALL INFORMATION RELEVANT TO THE RECIPIENT'S WORK AND RESPONSIBILITY ON THIS PROJECT. DESIGN PATH STUDIO SHALL NOT BE RESPONSIBLE FOR TRANSLATION ERRORS. DO NOT USE THESE CONSTRUCTION DOCUMENTS IF THE PERMIT HAS EXPIRED OR IS REVOKED AT ALL.
2. THE RECIPIENT RECOGNIZES AND ACKNOWLEDGES THAT THE USE OF THIS INFORMATION WILL BE AT THEIR SOLE RISK AND WITHOUT ANY LIABILITY OR LEGAL EXPOSURE TO DESIGN PATH STUDIO. NO WARRANTIES OF ANY NATURE, WHETHER EXPRESS OR IMPLIED, SHALL ATTACH TO THESE DOCUMENTS AND THE INFORMATION CONTAINED THEREON. ANY USE, REUSE, OR ALTERATION OF THESE DOCUMENTS BY THE RECIPIENT OR BY OTHERS WILL BE AT THE RECIPIENT'S RISK AND FULL LEGAL RESPONSIBILITY. FURTHERMORE, THE RECIPIENT WILL, TO THE FULLEST EXTENT PERMITTED BY LAW, DEFEND, INDEMNIFY AND HOLD DESIGN PATH STUDIO AND ITS ARCHITECTS HARMLESS FROM ANY AND ALL CLAIMS, SUITS, LIABILITY, DEMANDS, JUDGMENTS, OR COSTS ARISING OUT OF OR RESULTING THERE FROM ANY USE OF THESE CONSTRUCTION DOCUMENTS FOR OR ON ACCOUNT OF ANY INJURY, DEATH, DAMAGE OR LOSS TO PERSONS OR PROPERTY, DIRECT OR CONSEQUENTIAL DAMAGES IN ANY AMOUNT. THIS INDEMNITY DOES NOT APPLY TO THE SOLE NEGLIGENCE OR WILLFUL MISCONDUCT OF DESIGN PATH STUDIO OR ITS ARCHITECTS.
3. THE DESIGNS REPRESENTED BY THESE PLANS ARE COPYRIGHTED AND ARE SUBJECT TO COPYRIGHT PROTECTION.
4. IF THE RECIPIENT DOES NOT AGREE WITH THE ABOVE CONDITIONS, DO NOT PROCEED WITH CONSTRUCTION OF AN ADU OR OTHER IMPROVEMENT UNDER THESE PLANS AT ALL.

project
City of Perris
Pre-Approved
ADU Program

revisions
1

description
Structural
Details

date 4 April 2025

project no. PERRIS PRADU

drawn by DESIGN PATH STUDIO

sheet no. S5

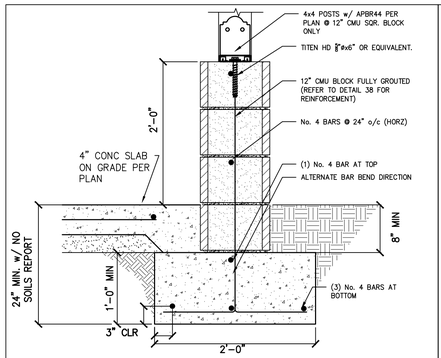

37 CMU WALL AT PORCH LOW WALL

SCALE: 1"=1'-0"

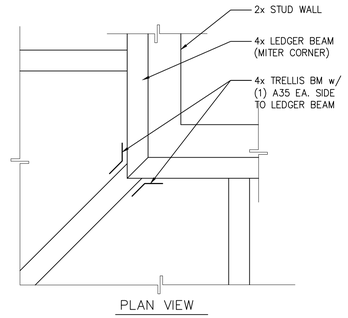

33 TRELLIS BEAM AT LEDGER CORNER

SCALE: 1"=1'-0"

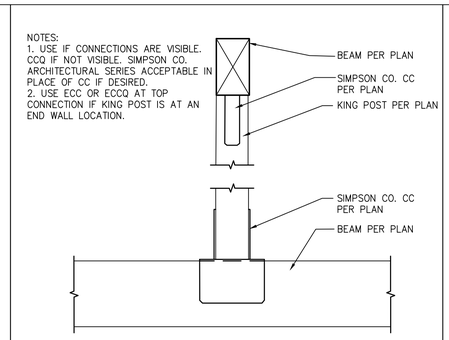

29 KING POST

SCALE: 1"=1'-0"

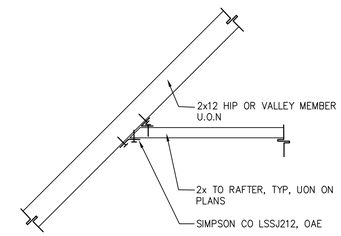

25 RAFTER TO HIP OR VALLEY

SCALE: 1"=1'-0"

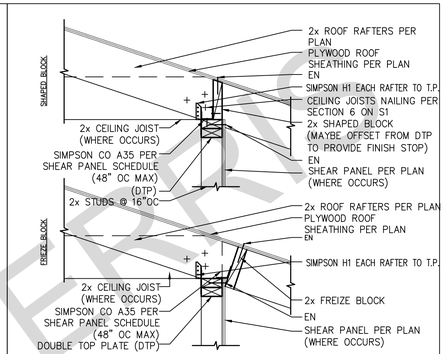

21 SHEAR TRANSFER AT EAVE

SCALE: 1"=1'-0"

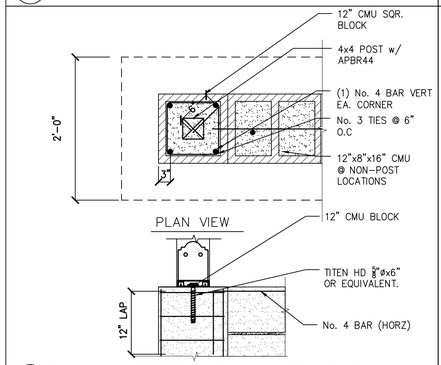

38 CMU WALL AT PORCH LOW WALL (FRONT VIEW)

SCALE: 1"=1'-0"

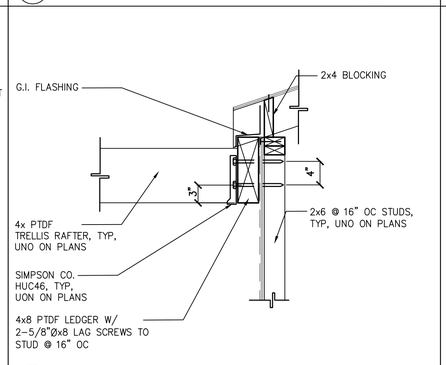

34 TRELLIS LEDGER AT WALL

SCALE: 1"=1'-0"

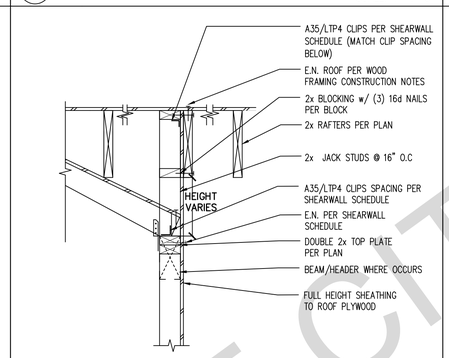

30 ROOF TRANSITION @ WALL/HEADER

SCALE: 1"=1'-0"

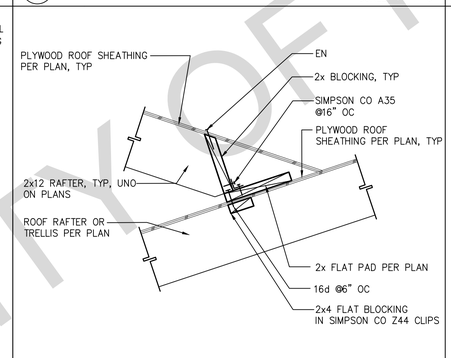

26 CALIFORNIA ROOF FILL CONNECTION

SCALE: 1"=1'-0"

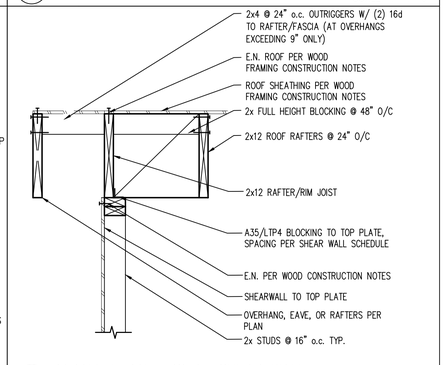

22 PARALLEL RAFTERS AT SHEAR WALL

SCALE: 1"=1'-0"

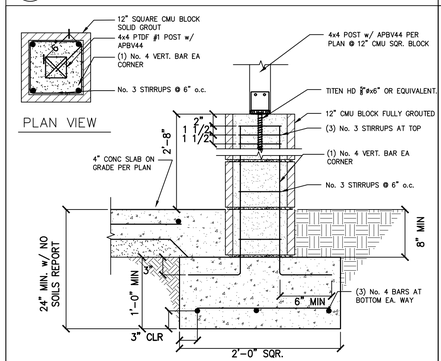

39 4x4 POST AT 12" CMU PILASTER

SCALE: 1"=1'-0"

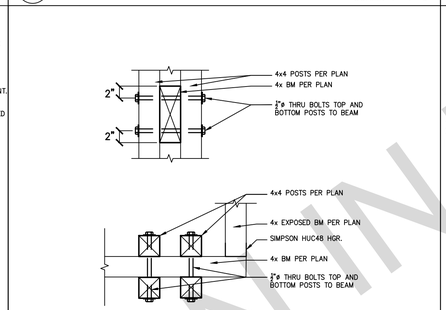

35 4x BEAM AT (4) 4x4 POST CONNECTION

SCALE: 1"=1'-0"

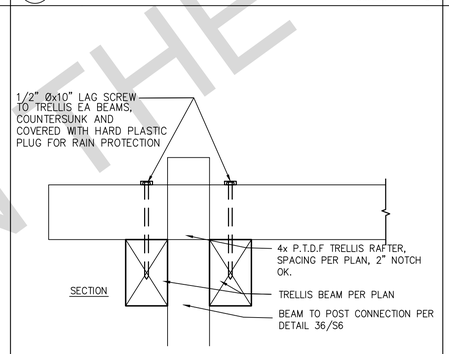

31 POST/BEAM/RAFTER/TRELLIS CONNECTIONS

SCALE: 1"=1'-0"

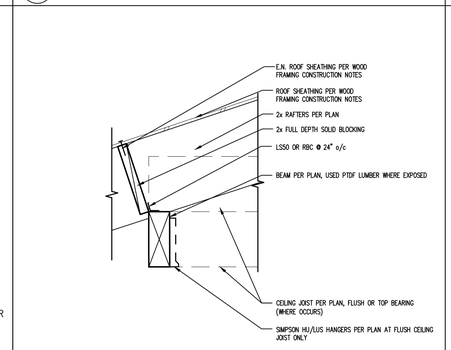

27 RAFTERS PORCH BEAMS

SCALE: 1"=1'-0"

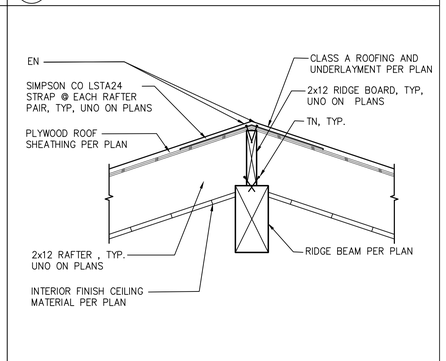

23 RAFTER AT RIDGE BOARD OVER RIDGE BEAM

SCALE: 1"=1'-0"

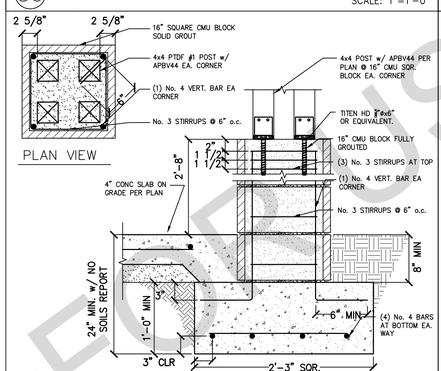

40 (4) 4x4 POST AT 16" CMU PILASTER

SCALE: 1"=1'-0"

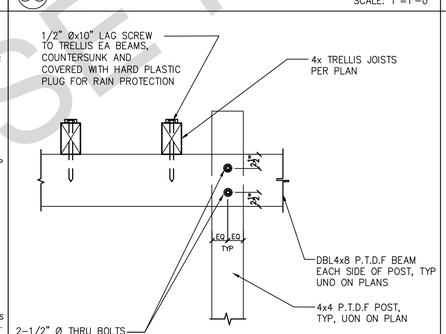

36 TRELLIS AT POST

SCALE: 1"=1'-0"

32

SCALE: 1"=1'-0"

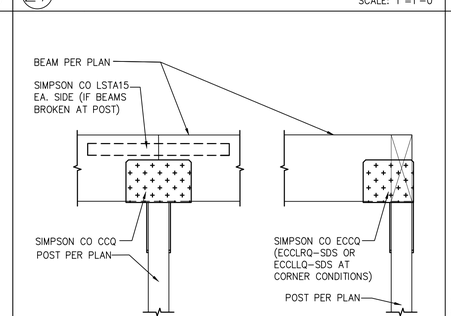

28 POST TO BEAM WITH CCQ/ECCQ

SCALE: 1"=1'-0"

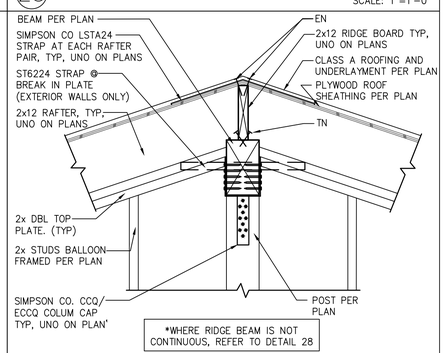

24 RIDGE BOARD & BEAM AT WALL POST W/ HARDWARE

SCALE: 1"=1'-0"

FOR USE IN THE CITY OF PERRIS

DESIGN PATH STUDIO
architecture + engineering + planning
DESIGNPATHSTUDIO.COM

BY USING THESE PERMIT READY CONSTRUCTION DOCUMENTS, THE RECIPIENT ACKNOWLEDGES, ACCEPTS AND VOLUNTARILY AFFIRMS THE FOLLOWING CONDITIONS:
1. THE USE OF THIS INFORMATION IS RESTRICTED TO THE ORIGINAL PROJECT FOR WHICH IT WAS PREPARED FOR THE PERMIT READY ACCESSORY DWELLING UNIT (ADU) PROGRAM FOR THE CITY OF PERRIS ONLY. THIS IS A LIMITED SET OF STANDARDIZED ADU PLANS AND SPECIFICATIONS APPROVED BY THE CITY OF PERRIS BUILDING DEPARTMENT. BUILDING CODES DO CHANGE OVER TIME AND RECIPIENT SHALL ENSURE FULL COMPLIANCE UNDER ALL CODES THEN IN EFFECT AT THE TIME OF THE SUBJECT PERMIT. THIS DOES NOT ELIMINATE OR REDUCE THE RECIPIENT'S RESPONSIBILITY TO VERIFY ANY AND ALL INFORMATION RELEVANT TO THE RECIPIENT'S WORK AND RESPONSIBILITY ON THIS PROJECT. DESIGN PATH STUDIO SHALL NOT BE RESPONSIBLE FOR TRANSLATION ERRORS. DO NOT USE THESE CONSTRUCTION DOCUMENTS IF THE PERMIT HAS EXPIRED OR IS REVOKED AT ALL.
2. THE RECIPIENT RECOGNIZES AND ACKNOWLEDGES THAT THE USE OF THIS INFORMATION WILL BE AT THEIR SOLE RISK AND WITHOUT ANY LIABILITY OR LEGAL EXPOSURE TO DESIGN PATH STUDIO. NO WARRANTIES OF ANY NATURE, WHETHER EXPRESS OR IMPLIED, SHALL ATTACH TO THESE DOCUMENTS AND THE INFORMATION CONTAINED THEREON. ANY USE, REUSE, OR ALTERATION OF THESE DOCUMENTS BY THE RECIPIENT OR BY OTHERS WILL BE AT THE RECIPIENT'S RISK AND FULL LEGAL RESPONSIBILITY. FURTHERMORE, THE RECIPIENT WILL, TO THE FULLEST EXTENT PERMITTED BY LAW, DEFEND, INDEMNIFY AND HOLD DESIGN PATH STUDIO AND ITS ARCHITECTS HARMLESS FROM ANY AND ALL CLAIMS, SUITS, LIABILITY, DEMANDS, JUDGMENTS, OR COSTS ARISING OUT OF OR RESULTING THERE FROM ANY USE OF THESE CONSTRUCTION DOCUMENTS FOR OR ON ACCOUNT OF ANY INJURY, DEATH, DAMAGE OR LOSS TO PERSONS OR PROPERTY, DIRECT OR CONSEQUENTIAL DAMAGES IN ANY AMOUNT. THIS INDEMNITY DOES NOT APPLY TO THE SOLE NEGLIGENCE OR WILLFUL MISCONDUCT OF DESIGN PATH STUDIO OR ITS ARCHITECTS.
3. THE DESIGNS REPRESENTED BY THESE PLANS ARE COPYRIGHTED AND ARE SUBJECT TO COPYRIGHT PROTECTION.
4. IF THE RECIPIENT DOES NOT AGREE WITH THE ABOVE CONDITIONS, DO NOT PROCEED WITH CONSTRUCTION OF AN ADU OR OTHER IMPROVEMENT UNDER THESE PLANS AT ALL.

project

City of Perris
Pre-Approved
ADU Program

revisions

1

description

Structural
Details

date	4 April 2025
project no.	PERRIS PRADU
drawn by	DESIGN PATH STUDIO
sheet no.	S6

BUILDING ENERGY ANALYSIS REPORT

PROJECT:

Perris ADU Studio

Perris, CA 92570

Project Designer:

Design Path Studio
P.O. Box 230165
Encinitas, CA 92023
619-292-8807

Report Prepared by:

Design Path Studio
2825 Dewey Road
San Diego, CA 92106

Job Number:

Date:

2/10/2025

The EnergyPro computer program has been used to perform the calculations summarized in this compliance report. This program has approval and is authorized by the California Energy Commission for use with both the Residential and Nonresidential 2019 Building Energy Efficiency Standards.

This program developed by EnergySoft Software – www.energysoft.com.

CERTIFICATE OF COMPLIANCE - RESIDENTIAL PERFORMANCE COMPLIANCE METHOD CF1R-PRF-01-E

Project Name: Perris ADU Studio **Calculation Date/Time:** 2025-02-10T10:07:12-08:00 **(Page 1 of 12)**

Calculation Description: Title 24 Analysis **Input File Name:** Perris ADU 0 Studio.ribd22x

GENERAL INFORMATION					
01	Project Name	Perris ADU Studio			
02	Run Title	Title 24 Analysis			
03	Project Location	_			
04	City	Perris	05	Standards Version	2022
06	Zip code	92570	07	Software Version	EnergyPro 9.0
08	Climate Zone	10	09	Front Orientation (deg/ Cardinal)	All orientations
10	Building Type	Single family	11	Number of Dwelling Units	1
12	Project Scope	Newly Constructed	13	Number of Bedrooms	1
14	Addition Cond. Floor Area (ft^2)	0	15	Number of Stories	1
16	Existing Cond. Floor Area (ft^2)	n/a	17	Fenestration Average U-factor	0.3
18	Total Cond. Floor Area (ft^2)	499	19	Glazing Percentage (%)	26.00%
20	ADU Bedroom Count	n/a			

COMPLIANCE RESULTS	
01	Building Complies with Computer Performance
02	This building incorporates features that require field testing and/or verification by a certified HERS rater under the supervision of a CEC-approved HERS provider.
03	This building incorporates one or more Special Features shown below

NOTICE: This document has been generated by California Home Energy Efficiency Rating Services (CHEERS) using information uploaded by third parties not affiliated with or related to CHEERS. Therefore, CHEERS is not responsible for, and cannot guarantee, the accuracy or completeness of the information contained in this document.

CERTIFICATE OF COMPLIANCE - RESIDENTIAL PERFORMANCE COMPLIANCE METHOD CF1R-PRF-01-E

Project Name: Perris ADU Studio **Calculation Date/Time:** 2025-02-10T10:07:12-08:00 **(Page 2 of 12)**

Calculation Description: Title 24 Analysis **Input File Name:** Perris ADU 0 Studio.ribd22x

ENERGY DESIGN RATINGS	Energy Design Ratings			Compliance Margins		
	Source Energy (EDR1)	Efficiency[1] EDR (EDR2efficiency)	Total[2] EDR (EDR2total)	Source Energy (EDR1)	Efficiency[1] EDR (EDR2efficiency)	Total[2] EDR (EDR2total)
Standard Design	35.3	39.5	31.5			
Proposed Design						
North Facing	35	37.3	30.3	0.3	2.2	1.2
East Facing	34.4	35.6	29.4	0.9	3.9	2.1
South Facing	34.6	37.8	30.5	0.7	1.7	1
West Facing	34.7	36.9	30.1	0.6	2.6	1.4
RESULT[3]: PASS						

[1]Efficiency EDR includes improvements like a better building envelope and more efficient equipment
[2]Total EDR includes efficiency and demand response measures such as photovoltaic (PV) system and batteries
[3]Building complies when source energy, efficiency and total compliance margins are greater than or equal to zero and unmet load hour limits are not exceeded

- Standard Design PV Capacity: 1.70 kWdc
- Proposed PV Capacity Scaling: North (1.70 kWdc) East (1.70 kWdc) South (1.70 kWdc) West (1.70 kWdc)

NOTICE: This document has been generated by California Home Energy Efficiency Rating Services (CHEERS) using information uploaded by third parties not affiliated with or related to CHEERS. Therefore, CHEERS is not responsible for, and cannot guarantee, the accuracy or completeness of the information contained in this document.

CERTIFICATE OF COMPLIANCE - RESIDENTIAL PERFORMANCE COMPLIANCE METHOD CF1R-PRF-01-E

Project Name: Perris ADU Studio **Calculation Date/Time:** 2025-02-10T10:07:12-08:00 **(Page 3 of 12)**

Calculation Description: Title 24 Analysis **Input File Name:** Perris ADU 0 Studio.ribd22x

ENERGY USE SUMMARY						
Energy Use	Standard Design Source Energy (EDR1) (kBtu/ft^2 -yr)	Standard Design TDV Energy (EDR2) (kTDV/ft^2 -yr)	Proposed Design Source Energy (EDR1) (kBtu/ft^2 -yr)	Proposed Design TDV Energy (EDR2) (kTDV/ft^2 -yr)	Compliance Margin (EDR1)	Compliance Margin (EDR2)
Space Heating	0.81	3.65	2.73	19.62	-1.92	-15.97
Space Cooling	2.05	43.43	1.32	32.93	0.73	10.5
IAQ Ventilation	0.46	4.83	0.46	4.83	0	0
Water Heating	3.71	37.7	2.44	27.08	1.27	10.62
Self Utilization/Flexibility Credit				0		0
North Facing Efficiency Compliance Total	**7.03**	**89.61**	**6.95**	**84.46**	**0.08**	**5.15**
Space Heating	0.81	3.65	2.48	17.64	-1.67	-13.99
Space Cooling	2.05	43.43	1.21	31.17	0.84	12.26
IAQ Ventilation	0.46	4.83	0.46	4.83	0	0
Water Heating	3.71	37.7	2.44	27.04	1.27	10.66
Self Utilization/Flexibility Credit				0		0
East Facing Efficiency Compliance Total	**7.03**	**89.61**	**6.59**	**80.68**	**0.44**	**8.93**

NOTICE: This document has been generated by California Home Energy Efficiency Rating Services (CHEERS) using information uploaded by third parties not affiliated with or related to CHEERS. Therefore, CHEERS is not responsible for, and cannot guarantee, the accuracy or completeness of the information contained in this document.

CERTIFICATE OF COMPLIANCE - RESIDENTIAL PERFORMANCE COMPLIANCE METHOD CF1R-PRF-01-E

Project Name: Perris ADU Studio **Calculation Date/Time:** 2025-02-10T10:07:12-08:00 **(Page 4 of 12)**

Calculation Description: Title 24 Analysis **Input File Name:** Perris ADU 0 Studio.ribd22x

ENERGY USE SUMMARY						
Energy Use	Standard Design Source Energy (EDR1) (kBtu/ft^2 -yr)	Standard Design TDV Energy (EDR2) (kTDV/ft^2 -yr)	Proposed Design Source Energy (EDR1) (kBtu/ft^2 -yr)	Proposed Design TDV Energy (EDR2) (kTDV/ft^2 -yr)	Compliance Margin (EDR1)	Compliance Margin (EDR2)
Space Heating	0.81	3.65	2.46	17.58	-1.65	-13.93
Space Cooling	2.05	43.43	1.39	36.13	0.66	7.3
IAQ Ventilation	0.46	4.83	0.46	4.83	0	0
Water Heating	3.71	37.7	2.43	27.02	1.28	10.68
Self Utilization/Flexibility Credit				0		0
South Facing Efficiency Compliance Total	**7.03**	**89.61**	**6.74**	**85.56**	**0.29**	**4.05**
Space Heating	0.81	3.65	2.59	18.86	-1.78	-15.21
Space Cooling	2.05	43.43	1.27	32.94	0.78	10.49
IAQ Ventilation	0.46	4.83	0.46	4.83	0	0
Water Heating	3.71	37.7	2.44	27.09	1.27	10.61
Self Utilization/Flexibility Credit				0		0
West Facing Efficiency Compliance Total	**7.03**	**89.61**	**6.76**	**83.72**	**0.27**	**5.89**

NOTICE: This document has been generated by California Home Energy Efficiency Rating Services (CHEERS) using information uploaded by third parties not affiliated with or related to CHEERS. Therefore, CHEERS is not responsible for, and cannot guarantee, the accuracy or completeness of the information contained in this document.

CERTIFICATE OF COMPLIANCE - RESIDENTIAL PERFORMANCE COMPLIANCE METHOD CF1R-PRF-01-E

Project Name: Perris ADU Studio **Calculation Date/Time:** 2025-02-10T10:07:12-08:00 **(Page 5 of 12)**

Calculation Description: Title 24 Analysis **Input File Name:** Perris ADU 0 Studio.ribd22x

ENERGY USE INTENSITY	Standard Design (kBtu/ft^2 - yr)	Proposed Design (kBtu/ft^2 - yr)	Compliance Margin (kBtu/ft^2 - yr)	Margin Percentage
North Facing				
Gross EUI[1]	31.96	30.67	1.29	4.04
Net EUI[2]	12.15	10.86	1.29	10.62
East Facing				
Gross EUI[1]	31.96	30.32	1.64	5.13
Net EUI[2]	12.15	10.51	1.64	13.5
South Facing				
Gross EUI[1]	31.96	30.7	1.26	3.94
Net EUI[2]	12.15	10.89	1.26	10.37
West Facing				
Gross EUI[1]	31.96	30.46	1.5	4.69
Net EUI[2]	12.15	10.65	1.5	12.35

Notes
1. Gross EUI is Energy Use Total (not including PV) / Total Building Area.
2. Net EUI is Energy Use Total (including PV) / Total Building Area.

NOTICE: This document has been generated by California Home Energy Efficiency Rating Services (CHEERS) using information uploaded by third parties not affiliated with or related to CHEERS. Therefore, CHEERS is not responsible for, and cannot guarantee, the accuracy or completeness of the information contained in this document.

CERTIFICATE OF COMPLIANCE - RESIDENTIAL PERFORMANCE COMPLIANCE METHOD CF1R-PRF-01-E

Project Name: Perris ADU Studio **Calculation Date/Time:** 2025-02-10T10:07:12-08:00 **(Page 6 of 12)**

Calculation Description: Title 24 Analysis **Input File Name:** Perris ADU 0 Studio.ribd22x

REQUIRED PV SYSTEMS											
01	02	03	04	05	06	07	08	09	10	11	12
DC System Size (kWdc)	Exception	Module Type	Array Type	Power Electronics	CFI	Azimuth (deg)	Tilt Input	Array Angle (deg)	Tilt: (x in 12)	Inverter Eff. (%)	Annual Solar Access (%)
1.7	NA	Standard (14-17%)	Fixed	none	true	150-270	n/a	n/a	<=7:12	96	98

REQUIRED SPECIAL FEATURES

The following are features that must be installed as condition for meeting the modeled energy performance for this computer analysis.

- Exposed slab floor in conditioned zone
- Variable capacity heat pump compliance option (verification details from VCHP Staff report, Appendix B, and RA3)
- Northwest Energy Efficiency Alliance (NEEA) rated heat pump water heater; specific brand/model, or equivalent, must be installed

HERS FEATURE SUMMARY

The following is a summary of the features that must be field verified by a certified HERS Rater as a condition for meeting the modeled energy performance for this computer analysis. Additional detail is provided in the building tables below. Registered CF2Rs and CF3Rs are required to be completed in the HERS Registry

- Quality insulation installation (QII)
- Indoor air quality ventilation
- Kitchen range hood
- Verified Refrigerant Charge
- Airflow in habitable rooms (SC3.1.4.1.7)
- Verified heat pump rated heating capacity
- Wall-mounted thermostat in zones greater than 150 ft2 (SC3.4.5)
- Ductless indoor units located entirely in conditioned space (SC3.1.4.1.8)

BUILDING - FEATURES INFORMATION						
01	02	03	04	05	06	07
Project Name	Conditioned Floor Area (ft^2)	Number of Dwelling Units	Number of Bedrooms	Number of Zones	Number of Ventilation Cooling Systems	Number of Water Heating Systems
Perris ADU Studio	499	1	1	1	0	1

NOTICE: This document has been generated by California Home Energy Efficiency Rating Services (CHEERS) using information uploaded by third parties not affiliated with or related to CHEERS. Therefore, CHEERS is not responsible for, and cannot guarantee, the accuracy or completeness of the information contained in this document.

CERTIFICATE OF COMPLIANCE - RESIDENTIAL PERFORMANCE COMPLIANCE METHOD CF1R-PRF-01-E

Project Name: Perris ADU Studio **Calculation Date/Time:** 2025-02-10T10:07:12-08:00 **(Page 7 of 12)**

Calculation Description: Title 24 Analysis **Input File Name:** Perris ADU 0 Studio.ribd22x

ZONE INFORMATION					
01	02	03	04	05	06	07
Zone Name	Zone Type	HVAC System Name	Zone Floor Area (ft^2)	Avg. Ceiling Height	Water Heating System 1	Status
ADU-Studio	Conditioned	Minisplit ADU-Studio1	499	9	DHW Sys 1	New

OPAQUE SURFACES							
01	02	03	04	05	06	07	08
Name	Zone	Construction	Azimuth	Orientation	Gross Area (ft^2)	Window and Door Area (ft2)	Tilt (deg)
Front Wall ADU-Studio	ADU-Studio	R-19 Wall	0	Front	153	45.3	90
Right Wall ADU-Studio	ADU-Studio	R-19 Wall	270	Right	294	18	90
Back Wall ADU-Studio	ADU-Studio	R-19 Wall	180	Back	153	12	90
Left Wall ADU-Studio	ADU-Studio	R-19 Wall	90	Left	294	54.3	90

OPAQUE SURFACES - CATHEDRAL CEILINGS										
01	02	03	04	05	06	07	08	09	10	11
Name	Zone	Construction	Azimuth	Orientation	Area (ft^2)	Skylight Area (ft^2)	Roof Rise (x in 12)	Roof Reflectance	Roof Emittance	Cool Roof
Roof (cath) ADU-Studio	ADU-Studio	R-30 Roof No Attic	270	Right	499	0	3	0.1	0.85	No

FENESTRATION / GLAZING														
01	02	03	04	05	06	07	08	09	10	11	12	13	14	
Name	Type	Surface	Orientation	Azimuth	Width (ft)	Height (ft)	Mult.	Area (ft^2)	U-factor	U-factor Source	SHGC	SHGC Source	Exterior Shading	
Window #A	Window	Front Wall ADU-Studio	Front	0			1	12	0.3	NFRC	0.23	NFRC	Bug Screen	
Fr Door #1	Window	Front Wall ADU-Studio	Front	0			1	33.3	0.3	NFRC	0.23	NFRC	Bug Screen	

NOTICE: This document has been generated by California Home Energy Efficiency Rating Services (CHEERS) using information uploaded by third parties not affiliated with or related to CHEERS. Therefore, CHEERS is not responsible for, and cannot guarantee, the accuracy or completeness of the information contained in this document.

CERTIFICATE OF COMPLIANCE - RESIDENTIAL PERFORMANCE COMPLIANCE METHOD CF1R-PRF-01-E

Project Name: Perris ADU Studio **Calculation Date/Time:** 2025-02-10T10:07:12-08:00 **(Page 8 of 12)**

Calculation Description: Title 24 Analysis **Input File Name:** Perris ADU 0 Studio.ribd22x

FENESTRATION / GLAZING														
01	02	03	04	05	06	07	08	09	10	11	12	13	14	
Name	Type	Surface	Orientation	Azimuth	Width (ft)	Height (ft)	Mult.	Area (ft^2)	U-factor	U-factor Source	SHGC	SHGC Source	Exterior Shading	
Window (2) #B	Window	Right Wall ADU-Studio	Right	270			1	18	0.3	NFRC	0.23	NFRC	Bug Screen	
Window (2) #E	Window	Back Wall ADU-Studio	Back	180			1	12	0.3	NFRC	0.23	NFRC	Bug Screen	
Window #C	Window	Left Wall ADU-Studio	Left	90			1	6	0.3	NFRC	0.23	NFRC	Bug Screen	
Sl Door #2	Window	Left Wall ADU-Studio	Left	90			1	33.3	0.3	NFRC	0.23	NFRC	Bug Screen	
Window #D	Window	Left Wall ADU-Studio	Left	90			1	15	0.3	NFRC	0.23	NFRC	Bug Screen	

SLAB FLOORS							
01	02	03	04	05	06	07	08
Name	Zone	Area (ft^2)	Perimeter (ft)	Edge Insul. R-value and Depth	Edge Insul. R-value and Depth	Carpeted Fraction	Heated
Slab-on-Grade ADU-Studio	ADU-Studio	499	92	none	0	0%	No

NOTICE: This document has been generated by California Home Energy Efficiency Rating Services (CHEERS) using information uploaded by third parties not affiliated with or related to CHEERS. Therefore, CHEERS is not responsible for, and cannot guarantee, the accuracy or completeness of the information contained in this document.

FOR USE IN THE CITY OF PERRIS

DESIGN PATH STUDIO
architecture + engineering + planning
DESIGNPATHSTUDIO.COM

BY USING THESE PERMIT READY CONSTRUCTION DOCUMENTS, THE RECIPIENT ACKNOWLEDGES, ACCEPTS AND VOLUNTARILY AFFIRMS THE FOLLOWING CONDITIONS:
1. THE USE OF THIS INFORMATION IS RESTRICTED TO THE ORIGINAL PROJECT FOR WHICH IT WAS PREPARED FOR THE PERMIT READY ACCESSORY DWELLING UNIT (ADU) PROGRAM FOR THE CITY OF PERRIS ONLY. THIS IS A LIMITED SET OF STANDARDIZED ADU PLANS AND SPECIFICATIONS APPROVED BY THE CITY OF PERRIS BUILDING DEPARTMENT. BUILDING CODES DO CHANGE OVER TIME AND RECIPIENT SHALL ENSURE FULL COMPLIANCE UNDER ALL CODES THEN IN EFFECT AT THE TIME OF THE SUBJECT PERMIT. THIS DOES NOT ELIMINATE OR REDUCE THE RECIPIENT'S RESPONSIBILITY TO VERIFY ANY AND ALL INFORMATION RELEVANT TO THE RECIPIENT'S WORK AND RESPONSIBILITY ON THIS PROJECT. DESIGN PATH STUDIO SHALL NOT BE RESPONSIBLE FOR TRANSLATION ERRORS. DO NOT USE THESE CONSTRUCTION DOCUMENTS IF THE PERMIT HAS EXPIRED OR IS REVOKED AT ALL.
2. THE RECIPIENT RECOGNIZES AND ACKNOWLEDGES THAT THE USE OF THIS INFORMATION WILL BE AT THEIR SOLE RISK AND WITHOUT ANY LIABILITY OR LEGAL EXPOSURE TO DESIGN PATH STUDIO. NO WARRANTIES OF ANY NATURE, WHETHER EXPRESS OR IMPLIED, SHALL ATTACH TO THESE DOCUMENTS AND THE INFORMATION CONTAINED THEREON. ANY USE, REUSE, OR ALTERATION OF THESE DOCUMENTS BY THE RECIPIENT OR BY OTHERS WILL BE AT THE RECIPIENT'S RISK AND FULL LEGAL RESPONSIBILITY. FURTHERMORE, THE RECIPIENT WILL, TO THE FULLEST EXTENT PERMITTED BY LAW, DEFEND, INDEMNIFY AND HOLD DESIGN PATH STUDIO AND ITS ARCHITECTS HARMLESS FROM ANY AND ALL CLAIMS, SUITS, LIABILITY, DEMANDS, JUDGMENTS, OR COSTS ARISING OUT OF OR RESULTING THERE FROM ANY USE OF THESE CONSTRUCTION DOCUMENTS FOR OR ON ACCOUNT OF ANY INJURY, DEATH, DAMAGE OR LOSS TO PERSONS OR PROPERTY, DIRECT OR CONSEQUENTIAL DAMAGES IN ANY AMOUNT. THIS INDEMNITY DOES NOT APPLY TO THE SOLE NEGLIGENCE OR WILLFUL MISCONDUCT OF DESIGN PATH STUDIO OR ITS ARCHITECTS.
3. THE DESIGNS REPRESENTED BY THESE PLANS ARE COPYRIGHTED AND ARE SUBJECT TO COPYRIGHT PROTECTION.
4. IF THE RECIPIENT DOES NOT AGREE WITH THE ABOVE CONDITIONS, DO NOT PROCEED WITH CONSTRUCTION OF AN ADU OR OTHER IMPROVEMENT UNDER THESE PLANS AT ALL.

project

City of Perris
Pre-Approved
ADU Program

revisions

01

description

Example
Energy
Calculations

date 4 April 2025

project no. PERRIS PRADU

drawn by DESIGN PATH STUDIO

sheet no. T24.1

FOR USE IN THE CITY OF PERRIS

OPAQUE SURFACE CONSTRUCTIONS

01	02	03	04	05	06	07	08
Construction Name	Surface Type	Construction Type	Framing	Total Cavity R-value	Interior / Exterior Continuous R-value	U-factor	Assembly Layers
R-19 Wall	Exterior Walls	Wood Framed Wall	2x6 @ 16 in. O. C.	R-19	None / None	0.074	Inside Finish: Gypsum Board Cavity / Frame: R-19 in 5-1/2 in. (R-18) / 2x6 Exterior Finish: 3 Coat Stucco
R-30 Roof No Attic	Cathedral Ceilings	Wood Framed Ceiling	2x10 @ 16 in. O. C.	R-30	None / None	0.037	Roofing: Light Roof (Asphalt Shingle) Roof Deck: Wood Siding/sheathing/decking Cavity / Frame: R-30 / 2x10 Inside Finish: Gypsum Board

BUILDING ENVELOPE - HERS VERIFICATION

01	02	03	04	05
Quality Insulation Installation (QII)	High R-value Spray Foam Insulation	Building Envelope Air Leakage	CFM50	CFM50
Required	Not Required	N/A	n/a	n/a

WATER HEATING SYSTEMS

01	02	03	04	05	06	07	08	09
Name	System Type	Distribution Type	Water Heater Name	Number of Units	Solar Heating System	Compact Distribution	HERS Verification	Water Heater Name (#)
DHW Sys 1	Domestic Hot Water (DHW)	Standard	DHW Heater 1	1	n/a	None	n/a	DHW Heater 1 (1)

WATER HEATERS - NEEA HEAT PUMP

01	02	03	04	05	06	07	08
Name	# of Units	Tank Vol. (gal)	NEEA Heat Pump Brand	NEEA Heat Pump Model	Tank Location	Duct Inlet Air Source	Duct Outlet Air Source
DHW Heater 1	1	40	Rheem	RheemPROPH40T2R H375SO	Outside	ADU-Studio	ADU-Studio

WATER HEATING - HERS VERIFICATION

01	02	03	04	05	06	07
Name	Pipe Insulation	Parallel Piping	Compact Distribution	Compact Distribution Type	Recirculation Control	Shower Drain Water Heat Recovery
DHW Sys 1 - 1/1	Not Required	Not Required	Not Required	None	Not Required	Not Required

SPACE CONDITIONING SYSTEMS

01	02	03	04	05	06	07	08	09
Name	System Type	Heating Unit Name	Heating Equipment Count	Cooling Unit Name	Cooling Equipment Count	Fan Name	Distribution Name	Required Thermostat Type
Minisplit ADU-Studio1	Heat pump heating cooling	Heat Pump System 1	1	Heat Pump System 1	1	n/a	n/a	Setback

HVAC - HEAT PUMPS

01	02	03	04	05	06	07	08	09	10	11	12	13
			Heating				Cooling					
Name	System Type	Number of Units	Efficiency Type	HSPF / HSPF2 / COP	Cap 47	Cap 17	Efficiency Type	SEER / SEER2	EER / EER / CEER	Zonally Controlled	Compressor Type	HERS Verification
Heat Pump System 1	VCHP-ductless	1	HSPF	8.2	15000	9300	EERSEER	14	11.7	Not Zonal	Single Speed	Heat Pump System 1-hers-htpump

HVAC HEAT PUMPS - HERS VERIFICATION

01	02	03	04	05	06	07	08	09
Name	Verified Airflow	Airflow Target	Verified EER/EER2	Verified SEER/SEER2	Verified Refrigerant Charge	Verified HSPF/HSPF2	Verified Heating Cap 47	Verified Heating Cap 17
Heat Pump System 1-hers-htpump	Not Required	0	Not Required	Not Required	Yes	No	Yes	Yes

VARIABLE CAPACITY HEAT PUMP COMPLIANCE OPTION - HERS VERIFICATION

01	02	03	04	05	06	07	08	09	10
Name	Certified Low-Static VCHP System	Airflow to Habitable Rooms	Ductless Units in Conditioned Space	Wall Mount Thermostat	Air Filter Sizing & Pressure Drop Rating	Low Leakage Ducts in Conditioned Space	Minimum Airflow per RA3.3 and SC3.3.3.4.1	Certified non-continuous Fan	Indoor Fan not Running Continuously
Heat Pump System 1	Not required	Required	Required	Required	Not required	Not required	Not required	Not required	Not required

INDOOR AIR QUALITY (IAQ) FANS

01	02	03	04	05	06	07	08	09
Dwelling Unit	Airflow (CFM)	Fan Efficacy (W/CFM)	IAQ Fan Type	Includes Heat/Energy Recovery?	IAQ Recovery Effectiveness - SRE	Includes Fault Indicator Display?	HERS Verification	Status
SFam IAQVentRpt	30	0.35	Exhaust	No	n/a	No	Yes	

DOCUMENTATION AUTHOR'S DECLARATION STATEMENT

1. I certify that this Certificate of Compliance documentation is accurate and complete.

Documentation Author Name: Yvonne St. Pierre	Documentation Author Signature: *Yvonne St. Pierre*
Company: Design Path Studio	Signature Date: 02/10/2025
Address: P.O. Box 230165	CEA/ HERS Certification Identification (If applicable):
City/State/Zip: Encinitas, CA 92023	Phone: (760) 484-0253

RESPONSIBLE PERSON'S DECLARATION STATEMENT

I certify the following under penalty of perjury, under the laws of the State of California:

1. I am eligible under Division 3 of the Business and Professions Code to accept responsibility for the building design identified on this Certificate of Compliance.
2. I certify that the energy features and performance specifications identified on this Certificate of Compliance conform to the requirements of Title 24, Part 1 and Part 6 of the California Code of Regulations.
3. The building design features or system design features identified on this Certificate of Compliance are consistent with the information provided on other applicable compliance documents, worksheets, calculations, plans and specifications submitted to the enforcement agency for approval with this building permit application.

Responsible Designer Name: Yvonne St. Pierre	Responsible Designer Signature: *Yvonne St. Pierre*
Company: Design Path Studio	Date Signed: 02/10/2025
Address: P.O. Box 230165	License:
City/State/Zip: Encinitas, CA 92023	Phone: (760) 484-0253

Digitally signed by California Home Energy Efficiency Rating Services (CHEERS). This digital signature is provided in order to secure the content of this registered document, and in no way implies Registration Provider responsibility for the accuracy of the information.

RESIDENTIAL MEASURES SUMMARY RMS-1

Project Name: Perris ADU Studio	Building Type: ☑ Single Family ☐ Addition Alone ☐ Multi Family ☐ Existing+ Addition/Alteration	Date: 2/10/2025
Project Address: Perris	California Energy Climate Zone: CA Climate Zone 10 · Total Cond. Floor Area: 499 · Addition: n/a	# of Units: 1

INSULATION

Construction	Type	Cavity	Area (ft^2)	Special Features	Status
Wall	Wood Framed	R 19	764		New
Roof	Wood Framed Rafter	R 30	499		New
Slab	Unheated Slab-on-Grade	- no insulation	499	Perim = 92'	New

FENESTRATION Total Area: 130 Glazing Percentage: 26.0% New/Altered Average U-Factor: 0.30

Orientation	Area(ft^2)	U-Fac	SHGC	Overhang	Sidefins	Exterior Shades	Status
Front (N)	45.3	0.300	0.23	none	none	N/A	New
Right (W)	18.0	0.300	0.23	none	none	N/A	New
Rear (S)	12.0	0.300	0.23	none	none	N/A	New
Left (E)	54.3	0.300	0.23	none	none	N/A	New

HVAC SYSTEMS

Qty.	Heating	Min. Eff	Cooling	Min. Eff	Thermostat	Status
1	Electric Heat Pump	8.20 HSPF	Split Heat Pump	14.0 SEER	Setback	New

HVAC DISTRIBUTION

Location	Heating	Cooling	Duct Location	Duct R-Value	Status
Minisplit ADU-Studio	Ductless / with Fan	Ductless	n/a	n/a	New

WATER HEATING

Qty.	Type	Gallons	Min. Eff	Distribution	Status
1	Heat Pump	40	3.10	Standard	New

2022 Single-Family Residential Mandatory Requirements Summary

NOTE: Single-family residential buildings subject to the Energy Codes must comply with all applicable mandatory measures, regardless of the compliance approach used. Review the respective section for more information.
(04/2022)

Building Envelope:

§ 110.6(a)1:	**Air Leakage.** Manufactured fenestration, exterior doors, and exterior pet doors must limit air leakage to 0.3 CFM per square foot or less when tested per NFRC-400, ASTM E283, or AAMA/WDMA/CSA 101/I.S.2/A440-2011. *
§ 110.6(a)5:	**Labeling.** Fenestration products and exterior doors must have a label meeting the requirements of § 10-111(a).
§ 110.6(b):	**Field fabricated exterior doors and fenestration** products must use U-factors and solar heat gain coefficient (SHGC) values from Tables 110.6-A, 110.6-B, or JA4.5 for exterior doors. They must be caulked and/or weather-stripped. *
§ 110.7:	**Air Leakage.** All joints, penetrations, and other openings in the building envelope that are potential sources of air leakage must be caulked, gasketed, or weather stripped.
§ 110.8(a):	**Insulation Certification by Manufacturers.** Insulation must be certified by the Department of Consumer Affairs, Bureau of Household Goods and Services (BHGS).
§ 110.8(g):	**Insulation Requirements for Heated Slab Floors.** Heated slab floors must be insulated per the requirements of § 110.8(g).
§ 110.8(i):	**Roofing Products Solar Reflectance and Thermal Emittance.** The thermal emittance and aged solar reflectance values of the roofing material must meet the requirements of § 110.8(i) and be labeled per §10-113 when the installation of a cool roof is specified on the CF1R.
§ 110.8(j):	**Radiant Barrier.** When required, radiant barriers must have an emittance of 0.05 or less and be certified to the Department of Consumer Affairs.
§ 150.0(a):	**Roof Deck, Ceiling and Rafter Roof Insulation.** Roof decks in newly constructed attics in climate zones 4 and 8-16 area-weighted average U-factor not exceeding U-0.184. Ceiling and rafter roofs minimum R-22 insulation in wood-frame ceiling; or area-weighted average U-factor must not exceed 0.043. Rafter roof alterations minimum R-19 or area-weighted average U-factor of 0.054 or less. Attic access doors must have permanently attached insulation using adhesive or mechanical fasteners. The attic access must be gasketed to prevent air leakage. Insulation must be installed in direct contact with a roof or ceiling which is sealed to limit infiltration and exfiltration as specified in § 110.7, including but not limited to placing insulation either above or below the roof deck or on top of a drywall ceiling. *
§ 150.0(b):	**Loose-fill Insulation.** Loose fill insulation must meet the manufacturer's required density for the labeled R-value.
§ 150.0(c):	**Wall Insulation.** Minimum R-13 insulation in 2x4 inch wood framing wall or have a U-factor of 0.102 or less, or R-20 in 2x6 inch wood framing or have a U-factor of 0.071 or less. Opaque non-framed assemblies must have an overall assembly U-factor not exceeding 0.102. Masonry walls must meet Tables 150.1-A or B. *
§ 150.0(d):	**Raised-floor Insulation.** Minimum R-19 insulation in raised wood framed floor or 0.037 maximum U-factor. *
§ 150.0(f):	**Slab Edge Insulation.** Slab edge insulation must meet all of the following: have a water absorption rate, for the insulation material alone without facings, no greater than 0.3 percent; have a water vapor permeance no greater than 2.0 perm per inch; be protected from physical damage and UV light deterioration; and, when installed as part of a heated slab floor, meet the requirements of § 110.8(g).
§ 150.0(g)1:	**Vapor Retarder.** In climate zones 1 through 16, the earth floor of unvented crawl space must be covered with a Class I or Class II vapor retarder. This requirement also applies to controlled ventilation crawl space for buildings complying with the exception to §150.0(d).
§ 150.0(g)2:	**Vapor Retarder.** In climate zones 14 and 16, a Class I or Class II vapor retarder must be installed on the conditioned space side of all insulation in all exterior walls, vented attics, and unvented attics with air-permeable insulation.
§ 150.0(q):	**Fenestration Products.** Fenestration, including skylights, separating conditioned space from unconditioned space or outdoors must have a maximum U-factor of 0.45; or area-weighted average U-factor of all fenestration must not exceed 0.45. *

Fireplaces, Decorative Gas Appliances, and Gas Log:

§ 110.5(e)	**Pilot Light.** Continuously burning pilot lights are not allowed for indoor and outdoor fireplaces.
§ 150.0(e)1:	**Closable Doors.** Masonry or factory-built fireplaces must have a closable metal or glass door covering the entire opening of the firebox.
§ 150.0(e)2:	**Combustion Intake.** Masonry or factory-built fireplaces must have a combustion outside air intake, which is at least six square inches in area and is equipped with a readily accessible, operable, and tight-fitting damper or combustion-air control device. *
§ 150.0(e)3:	**Flue Damper.** Masonry or factory-built fireplaces must have a flue damper with a readily accessible control. *

Space Conditioning, Water Heating, and Plumbing System:

§ 110.0-§ 110.3:	**Certification.** Heating, ventilation, and air conditioning (HVAC) equipment, water heaters, showerheads, faucets, and all other regulated appliances must be certified by the manufacturer to the California Energy Commission. *
§ 110.2(a):	**HVAC Efficiency.** Equipment must meet the applicable efficiency requirements in Table 110.2-A through Table 110.2-N. *
§ 110.2(b):	**Controls for Heat Pumps with Supplementary Electric Resistance Heaters.** Heat pumps with supplementary electric resistance heaters must have controls that prevent supplementary heater operation when the heating load can be met by the heat pump alone; and in which the cut-on temperature for compression heating is higher than the cut-on temperature for supplementary heating, and the cut-off temperature for compression heating is higher than the cut-off temperature for supplementary heating. *
§ 110.2(c):	**Thermostats.** All heating or cooling systems not controlled by a central energy management control system (EMCS) must have a setback thermostat. *
§ 110.3(c)3:	**Insulation.** Unfired service water heater storage tanks and solar water-heating backup tanks must have adequate insulation, or tank surface heat loss rating.
§ 110.3(c)6:	**Isolation Valves.** Instantaneous water heaters with an input rating greater than 6.8 kBtu per hour (2 kW) must have isolation valves with hose bibbs or other fittings on both cold and hot water lines to allow for flushing the water heater when the valves are closed.

2022 Single-Family Residential Mandatory Requirements Summary

§ 110.5:	**Pilot Lights.** Continuously burning pilot lights are prohibited for natural gas: fan-type central furnaces; household cooking appliances (except appliances without an electrical supply voltage connection with pilot lights that consume less than 150 Btu per hour); and pool and spa heaters. *
§ 150.0(h)1:	**Building Cooling and Heating Loads.** Heating and/or cooling loads are calculated in accordance with the ASHRAE Handbook, Equipment Volume, Applications Volume, and Fundamentals Volume; the SMACNA Residential Comfort System Installation Standards Manual; or the ACCA Manual J using design conditions specified in § 150.0(h)2.
§ 150.0(h)3A:	**Clearances.** Air conditioner and heat pump outdoor condensing units must have a clearance of at least five feet from the outlet of any dryer.
§ 150.0(h)3B:	**Liquid Line Drier.** Air conditioners and heat pump systems must be equipped with liquid line filter driers if required, as specified by the manufacturer's instructions.
§ 150.0(j)1:	**Water Piping, Solar Water-heating System Piping, and Space Conditioning System Line Insulation.** All domestic hot water piping must be insulated as specified in § 609.11 of the California Plumbing Code. *
§ 150.0(j)2:	**Insulation Protection.** Piping insulation must be protected from damage, including that due to sunlight, moisture, equipment maintenance, and wind as required by §120.3(b). Insulation exposed to weather must be water retardant and protected from UV light (no adhesive tapes). Insulation covering chilled water piping and refrigerant suction piping located outside the conditioned space must include, or be protected by, a Class I or Class II vapor retarder. Pipe insulation buried below grade must be installed in a waterproof and non-crushable casing or sleeve.
§ 150.0(n)1:	**Gas or Propane Water Heating Systems.** Systems using gas or propane water heaters to serve individual dwelling units must designate a space at least 2.5' x 2.5' x 7' suitable for the future installation of a heat pump water heater, and meet electrical and plumbing requirements, based on the distance between this designated space and the water heater location; and a condensate drain no more than 2" higher than the base of the water heater
§ 150.0(n)3:	**Solar Water-heating Systems.** Solar water-heating systems and collectors must be certified and rated by the Solar Rating and Certification Corporation (SRCC), the International Association of Plumbing and Mechanical Officials, Research and Testing (IAPMO R&T), or by a listing agency that is approved by the executive director.

Ducts and Fans:

§ 110.8(d)3:	**Ducts.** Insulation installed on an existing space-conditioning duct must comply with § 604.0 of the California Mechanical Code (CMC). If a contractor installs the insulation, the contractor must certify to the customer, in writing, that the insulation meets this requirement.
§ 150.0(m)1:	**CMC Compliance.** All air-distribution system ducts and plenums must meet CMC §§ 601.0-605.0 and ANSI/SMACNA-006-2006 HVAC Duct Construction Standards Metal and Flexible 3rd Edition. Portions of supply-air and return-air ducts and plenums must be insulated to R-6.0 or higher; ducts located entirely in conditioned space as confirmed through field verification and diagnostic testing (RA3.1.4.3.8) do not require insulation. Connections of metal ducts and inner core of flexible ducts must be mechanically fastened. Openings must be sealed with mastic, tape, or other duct-closure system that meets the applicable UL requirements, or aerosol sealant that meets UL 723. The combination of mastic and either mesh or tape must be used to seal openings greater than ¼", If mastic or tape is used. Building cavities, air handler support platforms, and plenums designed or constructed with materials other than sealed sheet metal, duct board or flexible duct must not be used to convey conditioned air. Building cavities and support platforms may contain ducts; ducts installed in these spaces must not be compressed. *
§ 150.0(m)2:	**Factory-Fabricated Duct Systems.** Factory-fabricated duct systems must comply with applicable requirements for duct construction, connections, and closures; joints and seams of duct systems and their components must not be sealed with cloth back rubber adhesive duct tapes unless such tape is used in combination with mastic and draw bands.
§ 150.0(m)3:	**Field-Fabricated Duct Systems.** Field-fabricated duct systems must comply with applicable requirements for: pressure-sensitive tapes, mastics, sealants, and other requirements specified for duct construction.
§ 150.0(m)7:	**Backdraft Damper.** Fan systems that exchange air between the conditioned space and outdoors must have backdraft or automatic dampers.
§ 150.0(m)8:	**Gravity Ventilation Dampers.** Gravity ventilating systems serving conditioned space must have either automatic or readily accessible, manually operated dampers in all openings to the outside, except combustion inlet and outlet air openings and elevator shaft vents.
§ 150.0(m)9:	**Protection of Insulation.** Insulation must be protected from damage due tosunlight, moisture, equipment maintenance, and wind. Insulation exposed to weather must be suitable for outdoor service (e.g., protected by aluminum, sheet metal, painted canvas, or plastic cover). Cellular foam insulation must be protected as above or painted with a water retardant and solar radiation-resistant coating.
§ 150.0(m)10:	**Porous Inner Core Flex Duct.** Porous inner cores of flex ducts must have a non-porous layer or air barrier between the inner core and outer vapor barrier.
§ 150.0(m)11:	**Duct System Sealing and Leakage Test.** When space conditioning systems use forced air duct systems to supply conditioned air to an occupiable space, the ducts must be sealed and duct leakage tested, as confirmed through field verification and diagnostic testing, in accordance with Reference Residential Appendix RA3.1.
§ 150.0(m)12:	**Air Filtration.** Space conditioning systems with ducts exceeding 10 feet and the supply side of ventilation systems must have MERV 13 or equivalent filters. Filters for space conditioning systems must have a two inch depth or can be one inch if sized per Equation 150.0-A. Clean-filter pressure drop and labeling must meet the requirements in §150.0(m)12. Filters must be accessible for regular service. Filter racks or grilles must use gaskets, sealing, or other means to close gaps around the inserted filters to and prevents air from bypassing the filter. *

2022 Single-Family Residential Mandatory Requirements Summary

§ 150.0(m)13:	**Space Conditioning System Airflow Rate and Fan Efficacy.** Space conditioning systems that use ducts to supply cooling must have a hole for the placement of a static pressure probe, or a permanently installed static pressure probe in the supply plenum. Airflow must be ≥ 350 CFM per ton of nominal cooling capacity, and an air-handling unit fan efficacy ≤ 0.45 watts per CFM for gas furnace air handlers and ≤ 0.58 watts per CFM for all others. Small duct high velocity systems must provide an airflow ≥ 250 CFM per ton of nominal cooling capacity, and an air-handling unit fan efficacy ≤ 0.62 watts per CFM. Field verification testing is required in accordance with Reference Residential Appendix RA3.3. *

Ventilation and Indoor Air Quality:

§ 150.0(o)1:	**Requirements for Ventilation and Indoor Air Quality.** All dwelling units must meet the requirements of ASHRAE Standard 62.2, Ventilation and Acceptable Indoor Air Quality in Residential Buildings subject to the amendments specified in § 150.0(o)1. *
§ 150.0(o)1B:	**Central Fan Integrated (CFI) Ventilation Systems.** Continuous operation of CFI air handlers is not allowed to provide the whole-dwelling unit ventilation airflow required per §150.0(o)1C. A motorized damper(s) must be installed on the ventilation duct(s) that prevents all airflow through the space conditioning duct system when the damper(s) is closed andcontrolled per §150.0(o)1Biii&iv. CFI ventilation systems must have controls that track outdoor air ventilation run time, and either open or close the motorized damper(s) for compliance with §150.0(o)1C.
§ 150.0(o)1C:	**Whole-Dwelling Unit Mechanical Ventilation for Single-Family Detached and townhouses .** Single-family detached dwelling units, and attached dwelling units not sharing ceilings or floors with other dwelling units, occupiable spaces, public garages, or commercial spaces must have mechanical ventilation airflow specified in § 150.0(o)1Ci-iii.
§ 150.0(o)1G:	**Local Mechanical Exhaust.** Kitchens and bathrooms must have local mechanical exhaust; nonenclosed kitchens must have demand-controlled exhaust system meeting requirements of §150.0(o)1Gii,enclosed kitchens and bathrooms can use demand-controlled or continuous exhaust meeting §150.0(o)1Giii-iv. Airflow must be measured by the installer per §150.0(o)1Gv, and rated for sound per §150.0(o)1Gvi. *
§ 150.0(o)1H&I:	**Airflow Measurement and Sound Ratings of Whole-Dwelling Unit Ventilation Systems.** The airflow required per § 150.0(o)1C must be measured by using a flow hood, flow grid, or other airflow measuring device at the fan's inlet or outlet terminals/grilles per Reference Residential Appendix RA3.7. Whole-Dwelling unit ventilation systems must be rated for sound per ASHRAE 62.2 §7.2 at no less than the minimum airflow rate required by §150.0(o)1C.
§ 150.0(o)2:	**Field Verification and Diagnostic Testing.** Whole-Dwelling Unit ventilation airflow, vented range hood airflow and sound rating, and HRV and ERV fan efficacy must be verified in accordance with Reference Residential Appendix RA3.7. Vented range hoods must be verified per Reference Residential Appendix RA3.7.4.3 to confirm if it is rated by HVI or AHAM to comply with the airflow rates and sound requirements per §150.0(o)1G

Pool and Spa Systems and Equipment:

§ 110.4(a):	**Certification by Manufacturers.** Any pool or spa heating system or equipment must be certified to have all of the following: compliance with the Appliance Efficiency Regulations and listing in MAEDbS; an on-off switch mounted outside of the heater that allows shutting off the heater without adjusting the thermostat setting; a permanent weatherproof plate or card with operating instructions; and must not use electric resistance heating. *
§ 110.4(b)1:	**Piping.** Any pool or spa heating system or equipment must be installed with at least 36 inches of pipe between the filter and the heater, or dedicated suction and return lines, or built-in or built-up connections to allow for future solar heating.
§ 110.4(b)2:	**Covers.** Outdoor pools or spas that have a heat pump or gas heater must have a cover.
§ 110.4(b)3:	**Directional Inlets and Time Switches for Pools.** Pools must have directional inlets that adequately mix the pool water, and a time switch that will allow all pumps to be set or programmed to run only during off-peak electric demand periods.
§ 110.5:	**Pilot Light.** Natural gas pool and spa heaters must not have a continuously burning pilot light.
§ 150.0(p):	**Pool Systems and Equipment Installation.** Residential pool systems or equipment must meet the specified requirements for pump sizing, flow rate, piping, filters, and valves. *

Lighting:

§ 110.9:	**Lighting Controls and Components.** All lighting control devices and systems, ballasts, and luminaires must meet the applicable requirements of § 110.9. *
§ 150.0(k)1A:	**Luminaire Efficacy.** All installed luminaires must meet the requirements in Table 150.0-A, except lighting integral to exhaust fans, kitchen range hoods, bath vanity mirrors, and garage door openers; navigation lighting less than 5 watts; and lighting internal to drawers, cabinets, and linen closets with an efficacy of at least 45 lumens per watt.
§ 150.0(k)1B:	**Screw based luminaires.** Screw based luminaires must contain lamps that comply with Reference Joint Appendix JA8. *
§ 150.0(k)1C:	**Recessed Downlight Luminaires in Ceilings.** Luminaires recessed into ceilings must not contain screw based sockets, must be airtight, and must be sealed with a gasket or caulk. California Electrical Code § 410.116 must also be met.
§ 150.0(k)1D:	**Light Sources in Enclosed or Recessed Luminaires.** Lamps and other separable light sources that are not compliant with the JA8 elevated temperature requirements, including marking requirements, must not be installed in enclosed or recessed luminaires.
§ 150.0(k)1E:	**Blank Electrical Boxes.** The number of electrical boxes that are more than five feet above the finished floor and do not contain a luminaire or other device shall be no more than the number of bedrooms. These boxes must be served by a dimmer, vacancy sensor control, low voltage wiring, or fan speed control.
§ 150.0(k)1F:	**Lighting Integral to Exhaust Fans.** Lighting integral to exhaust fans (except when installed by the manufacturer in kitchen exhaust hoods) must meet the applicable requirements of § 150.0(k). *

2022 Single-Family Residential Mandatory Requirements Summary

§ 150.0(k)1G:	**Screw based luminaires.** Screw based luminaires must contain lamps that comply with Reference Joint Appendix JA8. *
§ 150.0(k)1H:	**Light Sources in Enclosed or Recessed Luminaires.** Lamps and other separable light sources that are not compliant with the JA8 elevated temperature requirements, including marking requirements, must not be installed in enclosed or recessed luminaires.
§ 150.0(k)1I:	**Light Sources in Drawers, Cabinets, and Linen Closets.** Light sources internal to drawers, cabinetry or linen closets are not required to comply with Table 150.0-A or be controlled by vacancy sensors provided that they are rated to consume no more than 5 watts of power, emit no more than 150 lumens, and are equipped with controls that automatically turn the lighting off when the drawer, cabinet or linen closet is closed.
§ 150.0(k)2A:	**Interior Switches and Controls.** All forward phase cut dimmers used with LED light sources must comply with NEMA SSL 7A.
§ 150.0(k)2B:	**Interior Switches and Controls.** Exhaust fans must be controlled separately from lighting systems. *
§ 150.0(k)2A:	**Accessible Controls.** Lighting must have readily accessible wall-mounted controls that allow the lighting to be manually turned on and off. *
§ 150.0(k)2B:	**Multiple Controls.** Controls must not bypass a dimmer, occupant sensor, or vacancy sensor function if the dimmer or sensor is installed to comply with § 150.0(k).
§ 150.0(k)2C:	**Mandatory Requirements.** Lighting controls must comply with the applicable requirements of § 110.9.
§ 150.0(k)2D:	**Energy Management Control Systems.** An energy management control system (EMCS) may be used to comply with dimming, occupancy, and control requirements if it provides the functionality of the specified control per § 110.9 and the physical controls specified in § 150.0(k)2A.
§ 150.0(k)2E:	**Automatic Shutoff Controls.** In bathrooms, garages, laundry rooms, utility rooms and walk-in closets, at least one installed luminaire must be controlled by an occupancy or vacancy sensor providing automatic-off functionality. Lighting inside drawers and cabinets with opaque fronts or doors must have controls that turn the light off when the drawer or door is closed.
§ 150.0(k)2F:	**Dimmers.** Lighting in habitable spaces (e.g., living rooms, dining rooms, kitchens, and bedrooms) must have readily accessible wall-mounted dimming controls that allow the lighting to be manually adjusted up and down. Forward phase cut dimmers controlling LED light sources in these spaces must comply with NEMA SSL 7A.
§ 150.0(k)2K:	**Independent controls.** Integrated lighting of exhaust fans shall be controlled independently from the fans. Lighting under cabinets or shelves, lighting in display cabinets, and switched outlets must be controlled separately from ceiling-installed lighting.
§ 150.0(k)3A:	**Residential Outdoor Lighting.** For single-family residential buildings, outdoor lighting permanently mounted to a residential building, or to other buildings on the same lot, must have a manual on/off switch and either a photocell and motion sensor or automatic time switch control) or an astronomical time clock. An energy management control system that provides the specified control functionality and meets all applicable requirements may be used to meet these requirements.
§ 150.0(k)4:	**Internally illuminated address signs.** Internally illuminated address signs must either comply with § 140.8 or consume no more than 5 watts of power.
§ 150.0(k)5:	**Residential Garages for Eight or More Vehicles.** Lighting for residential parking garages for eight or more vehicles must comply with the applicable requirements for nonresidential garages in §§ 110.9, 130.0, 130.1, 130.4, 140.6, and 141.0.

Solar Readiness:

§ 110.10(a)1:	**Single-family Residences.** Single-family residences located in subdivisions with 10 or more single-family residences and where the application for a tentative subdivision map for the residences has been deemed complete and approved by the enforcement agency, which do not have a photovoltaic system installed, must comply with the requirements of § 110.10(b)-(e).
§110.10(b)1A:	**Minimum Solar Zone Area.** The solar zone must have a minimum total area as described below. The solar zone must comply with access, pathway, smoke ventilation, and spacing requirements as specified in Title 24, Part 9 or other parts of Title 24 or in any requirements adopted by a local jurisdiction. The solar zone total area must be comprised of areas that have no dimension less than 5 feet and are no less than 80 square feet each for buildings with roof areas less than or equal to 10,000 square feet or no less than 160 square feet each for buildings with roof areas greater than 10,000 square feet. For single-family residences, the solar zone must be located on the roof or overhang of the building and have a total area no less than 250 square feet. *
§ 110.10(b)2:	**Azimuth.** All sections of the solar zone located on steep-sloped roofs must have an azimuth between 90-300° of true north.
§ 110.10(b)3A:	**Shading.** The solar zone must not contain any obstructions, including but not limited to: vents, chimneys, architectural features, and roof mounted equipment. *
§ 110.10(b)3B:	**Shading.** Any obstruction located on the roof or any other part of the building that projects above a solar zone must be located at least twice the horizontal distance of the height difference between the highest point of the obstruction and the horizontal projection of the nearest point of the solar zone, measured in the vertical plane. *
§ 110.10(b)4:	**Structural Design Loads on Construction Documents.** For areas of the roof designated as a solar zone, the structural design loads for roof dead load and roof live load must be clearly indicated on the construction documents.
§ 110.10(c):	**Interconnection Pathways.** The construction documents must indicate: a location reserved for inverters and metering equipment and a pathway reserved for routing of conduit from the solar zone to the point of interconnection with the electrical service; and for single-family residences and central water-heating systems, a pathway reserved for routing plumbing from the solar zone to the water-heating system.
§ 110.10(d):	**Documentation.** A copy of the construction documents or a comparable document indicating the information from § 110.10(b)-(c) must be provided to the occupant.
§ 110.10(e)1:	**Main Electrical Service Panel.** The main electrical service panel must have a minimum busbar rating of 200 amps.
§ 110.10(e)2:	**Main Electrical Service Panel.** The main electrical service panel must have a reserved space to allow for the installation of a double pole circuit breaker for a future solar electric installation. The reserved space must be permanently marked as "For Future Solar Electric."

Electric and Energy Storage Ready:

DESIGN PATH STUDIO
architecture + engineering + planning
DESIGNPATHSTUDIO.COM

BY USING THESE PERMIT READY CONSTRUCTION DOCUMENTS, THE RECIPIENT ACKNOWLEDGES, ACCEPTS AND VOLUNTARILY AFFIRMS THE FOLLOWING CONDITIONS:
1. THE USE OF THIS INFORMATION IS RESTRICTED TO THE ORIGINAL PROJECT FOR WHICH IT WAS PREPARED FOR THE PERMIT READY ACCESSORY DWELLING UNIT (ADU) PROGRAM FOR THE CITY OF PERRIS ONLY. THIS IS A LIMITED SET OF STANDARDIZED ADU PLANS AND SPECIFICATIONS APPROVED BY THE CITY OF PERRIS BUILDING DEPARTMENT. BUILDING CODES DO CHANGE OVER TIME AND RECIPIENT SHALL ENSURE FULL COMPLIANCE UNDER ALL CODES THEN IN EFFECT AT THE TIME OF THE SUBJECT PERMIT. THIS DOES NOT ELIMINATE OR REDUCE THE RECIPIENT'S RESPONSIBILITY TO VERIFY ANY AND ALL INFORMATION RELEVANT TO THE RECIPIENT'S WORK AND RESPONSIBILITY ON THIS PROJECT. DESIGN PATH STUDIO SHALL NOT BE RESPONSIBLE FOR TRANSLATION ERRORS. DO NOT USE THESE CONSTRUCTION DOCUMENTS IF THE PERMIT HAS EXPIRED OR IS REVOKED AT ALL.
2. THE RECIPIENT RECOGNIZES AND ACKNOWLEDGES THAT THE USE OF THIS INFORMATION WILL BE AT THEIR SOLE RISK AND WITHOUT ANY LIABILITY OR LEGAL EXPOSURE TO DESIGN PATH STUDIO. NO WARRANTIES OF ANY NATURE, WHETHER EXPRESS OR IMPLIED, SHALL ATTACH TO THESE DOCUMENTS AND THE INFORMATION CONTAINED THEREON. ANY USE, REUSE, OR ALTERATION OF THESE DOCUMENTS BY THE RECIPIENT OR BY OTHERS WILL BE AT THE RECIPIENT'S RISK AND FULL LEGAL RESPONSIBILITY. FURTHERMORE, THE RECIPIENT WILL, TO THE FULLEST EXTENT PERMITTED BY LAW, DEFEND, INDEMNIFY AND HOLD DESIGN PATH STUDIO AND ITS ARCHITECTS HARMLESS FROM ANY AND ALL CLAIMS, SUITS, LIABILITY, DEMANDS, JUDGMENTS, OR COSTS ARISING OUT OF OR RESULTING THERE FROM ANY USE OF THESE CONSTRUCTION DOCUMENTS FOR OR ON ACCOUNT OF ANY INJURY, DEATH, DAMAGE OR LOSS TO PERSONS OR PROPERTY, DIRECT OR CONSEQUENTIAL DAMAGES IN ANY AMOUNT. THIS INDEMNITY DOES NOT APPLY TO THE SOLE NEGLIGENCE OR WILLFUL MISCONDUCT OF DESIGN PATH STUDIO OR ITS ARCHITECTS.
3. THE DESIGNS REPRESENTED BY THESE PLANS ARE COPYRIGHTED AND ARE SUBJECT TO COPYRIGHT PROTECTION.
4. IF THE RECIPIENT DOES NOT AGREE WITH THE ABOVE CONDITIONS, DO NOT PROCEED WITH CONSTRUCTION OF AN ADU OR OTHER IMPROVEMENT UNDER THESE PLANS AT ALL.

project
City of Perris Pre-Approved ADU Program

revisions
01

description
Example Energy Calculations

date 4 April 2025
project no. PERRIS PRADU
drawn by DESIGN PATH STUDIO
sheet no. T24.2

2022 Single-Family Residential Mandatory Requirements Summary

§ 150.0(s)	**Energy Storage System (ESS) Ready.** All single-family residences must meet all of the following: Either ESS-ready interconnection equipment with backed up capacity of 60 amps or more and four or more ESS supplied branch circuits, or a dedicated raceway from the main service to a subpanel that supplies the branch circuits in § 150.0(s); at least four branch circuits must be identified and have their source collocated at a single panelboard suitable to be supplied by the ESS, with one circuit supplying the refrigerator, one lighting circuit near the primary exit, and one circuit supplying a sleeping room receptacle outlet; main panelboard must have a minimum busbar rating of 225 amps; sufficient space must be reserved to allow future installation of a system isolation equipment/transfer switch within 3' of the main panelboard, with raceways installed between the panelboard and the switch location to allow the connection of backup power source.
§ 150.0(t)	**Heat Pump Space Heater Ready.** Systems using gas or propane furnaces to serve individual dwelling units must include: A dedicated unobstructed 240V branch circuit wiring installed within 3' of the furnace with circuit conductors rated at least 30 amps with the blank cover identified as "240V ready;" and a reserved main electrical service panel space to allow for the installation of a double pole circuit breaker permanently marked as "For Future 240V use."
§ 150.0(u)	**Electric Cooktop Ready.** Systems using gas or propane cooktop to serve individual dwelling units must include: A dedicated unobstructed 240V branch circuit wiring installed within 3' of the cooktop with circuit conductors rated at least 50 amps with the blank cover identified as "240V ready;" and a reserved main electrical service panel space to allow for the installation of a double pole circuit breaker permanently marked as "For Future 240V use."
§ 150.0(v)	**Electric Clothes Dryer Ready.** Clothes dryer locations with gas or propane plumbing to serve individual dwelling units must include: A dedicated unobstructed 240V branch circuit wiring installed within 3' of the dryer location with circuit conductors rated at least 30 amps with the blank cover identified as "240V ready;" and a reserved main electrical service panel space to allow for the installation of a double pole circuit breaker permanently marked as "For Future 240V use."

*Exceptions may apply.

5/6/22

HVAC SYSTEM HEATING AND COOLING LOADS SUMMARY

Project Name: Perris ADU Studio
System Name: Minicpkit ADU-Studio
Date: 2/10/2025
Floor Area: 499

ENGINEERING CHECKS	
Number of Systems	1
Heating System	
Output per System	15,000
Total Output (Btu/h)	15,000
Output (Btu/h/sqft)	30.1
Cooling System	
Output per System	15,000
Total Output (Btu/h)	15,000
Total Output (Tons)	1.3
Total Output (Btu/h/sqft)	30.1
Total Output (sqft/Ton)	399.2
Air System	
CFM per System	300
Airflow (cfm)	300
Airflow (cfm/sqft)	0.60
Airflow (cfm/Ton)	240.0
Outside Air (%)	0.0%
Outside Air (cfm/sqft)	0.00

SYSTEM LOAD	COIL COOLING PEAK CFM	COIL COOLING PEAK Sensible	COIL COOLING PEAK Latent	COIL HTG. PEAK CFM	COIL HTG. PEAK Sensible
Total Room Loads	315	6,412	153	240	9,260
Return Vented Lighting		0			0
Return Air Ducts		0			0
Return Fan		0			0
Ventilation	0	0	0	0	0
Supply Fan		0			0
Supply Air Ducts		0			0
TOTAL SYSTEM LOAD		6,412	153		9,260

HVAC EQUIPMENT SELECTION				
Fujitsu AOUG15LZAS1		12,558	547	8,361
Total Adjusted System Output (Adjusted for Peak Design conditions)		12,558	547	8,361
TIME OF SYSTEM PEAK		Aug 3 PM		Jan 1 AM

Note: values above given at ARI conditions

HEATING SYSTEM PSYCHROMETRICS (Airstream Temperatures at Time of Heating Peak)

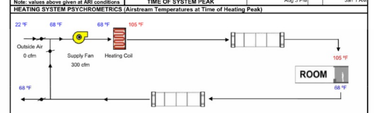

COOLING SYSTEM PSYCHROMETRICS (Airstream Temperatures at Time of Cooling Peak)

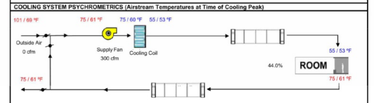

FOR USE IN IN THE CITY OF PERRIS

DESIGN PATH STUDIO
architecture + engineering + planning
DESIGNPATHSTUDIO.COM

BY USING THESE PERMIT READY CONSTRUCTION DOCUMENTS, THE RECIPIENT ACKNOWLEDGES, ACCEPTS AND VOLUNTARILY AFFIRMS THE FOLLOWING CONDITIONS:
1. THE USE OF THIS INFORMATION IS RESTRICTED TO THE ORIGINAL PROJECT FOR WHICH IT WAS PREPARED FOR THE PERMIT READY ACCESSORY DWELLING UNIT (ADU) PROGRAM FOR THE CITY OF PERRIS ONLY. THIS IS A LIMITED SET OF STANDARDIZED ADU PLANS AND SPECIFICATIONS APPROVED BY THE CITY OF PERRIS BUILDING DEPARTMENT. BUILDING CODES DO CHANGE OVER TIME AND RECIPIENT SHALL ENSURE FULL COMPLIANCE UNDER ALL CODES THEN IN EFFECT AT THE TIME OF THE SUBJECT PERMIT. THIS DOES NOT ELIMINATE OR REDUCE THE RECIPIENT'S RESPONSIBILITY TO VERIFY ANY AND ALL INFORMATION RELEVANT TO THE RECIPIENT'S WORK AND RESPONSIBILITY ON THIS PROJECT. DESIGN PATH STUDIO SHALL NOT BE RESPONSIBLE FOR TRANSLATION ERRORS. DO NOT USE THESE CONSTRUCTION DOCUMENTS IF THE PERMIT HAS EXPIRED OR IS REVOKED AT ALL.
2. THE RECIPIENT RECOGNIZES AND ACKNOWLEDGES THAT THE USE OF THIS INFORMATION WILL BE AT THEIR SOLE RISK AND WITHOUT ANY LIABILITY OR LEGAL EXPOSURE TO DESIGN PATH STUDIO. NO WARRANTIES OF ANY NATURE, WHETHER EXPRESS OR IMPLIED, SHALL ATTACH TO THESE DOCUMENTS AND THE INFORMATION CONTAINED THEREON. ANY USE, REUSE, OR ALTERATION OF THESE DOCUMENTS BY THE RECIPIENT OR BY OTHERS WILL BE AT THE RECIPIENT'S RISK AND FULL LEGAL RESPONSIBILITY. FURTHERMORE, THE RECIPIENT WILL, TO THE FULLEST EXTENT PERMITTED BY LAW, DEFEND, INDEMNIFY AND HOLD DESIGN PATH STUDIO AND ITS ARCHITECTS HARMLESS FROM ANY AND ALL CLAIMS, SUITS, LIABILITY, DEMANDS, JUDGMENTS, OR COSTS ARISING OUT OF OR RESULTING THERE FROM ANY USE OF THESE CONSTRUCTION DOCUMENTS FOR OR ON ACCOUNT OF ANY INJURY, DEATH, DAMAGE OR LOSS TO PERSONS OR PROPERTY, DIRECT OR CONSEQUENTIAL DAMAGES IN ANY AMOUNT. THIS INDEMNITY DOES NOT APPLY TO THE SOLE NEGLIGENCE OR WILLFUL MISCONDUCT OF DESIGN PATH STUDIO OR ITS ARCHITECTS.
3. THE DESIGNS REPRESENTED BY THESE PLANS ARE COPYRIGHTED AND ARE SUBJECT TO COPYRIGHT PROTECTION.
4. IF THE RECIPIENT DOES NOT AGREE WITH THE ABOVE CONDITIONS, DO NOT PROCEED WITH CONSTRUCTION OF AN ADU OR OTHER IMPROVEMENT UNDER THESE PLANS AT ALL.

project
City of Perris
Pre-Approved
ADU Program

revisions
0

description
Example
Energy
Calculations

date 4 April 2025
project no. PERRIS PRADU
drawn by DESIGN PATH STUDIO
sheet no. T24.3